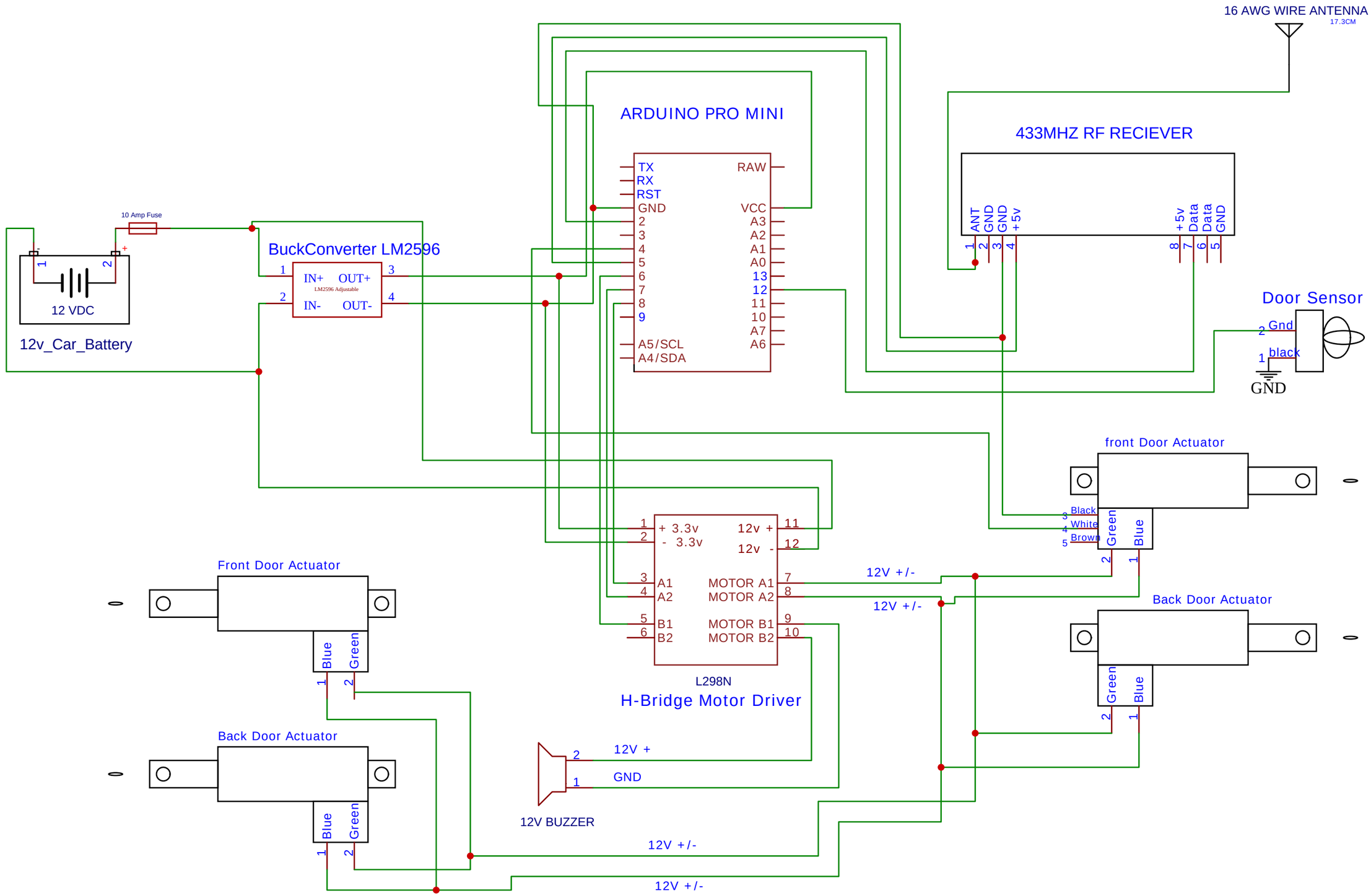

Note: The Sign GND .. means grounded to car chasis.

TITLE: SMART CAR CENTRAL LOCK SYSTEM SCHE.		REV: 1.0
EasyEDA	Company: INDV. PRASHANT BAIRAGI	Sheet: 1/1
	Date: 13-07-2025	Drawn By: Github @PrashantOmBairagi