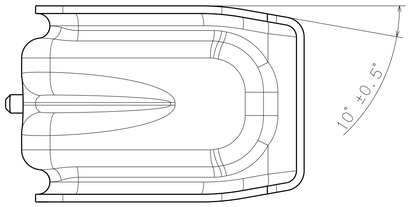

LEFT VIEW

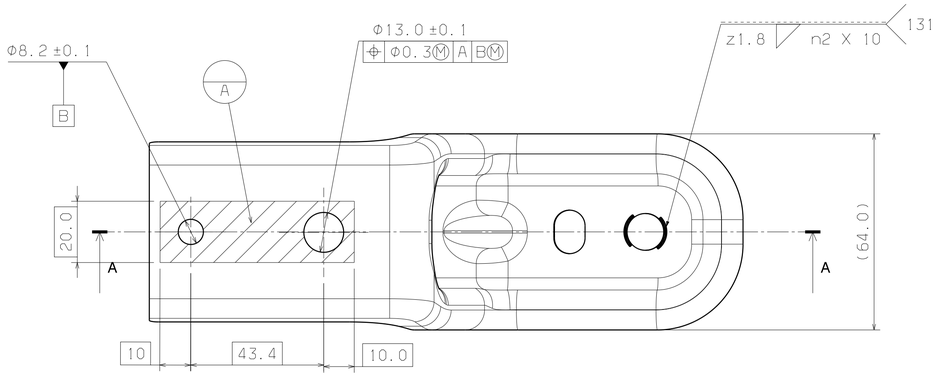

FRONT VIEW

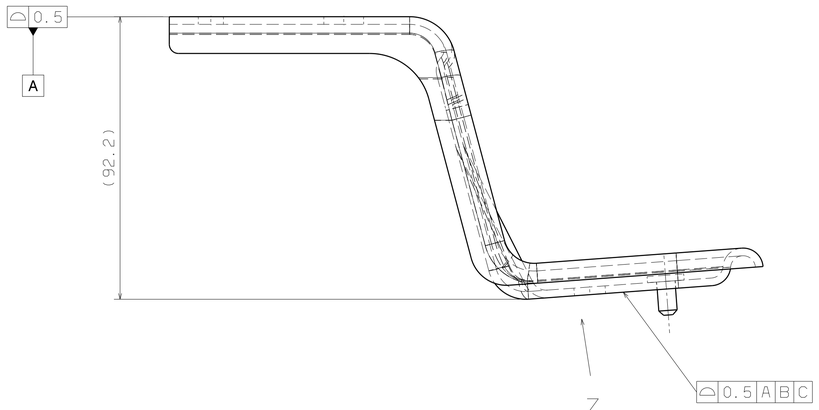

SEE HATCHED AREA

BOTTOM VIEW

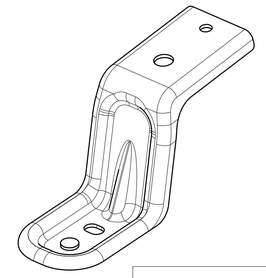

ISOMETRIC VIEW
NOT TO SCALE

NOTES: (UNLESS OTHERWISE SPECIFIED)

SC — CONTROL ITEM: THIS SYMBOL IDENTIFIES SIGNIFICANT CHARACTERISTICS AS DESIGNATED BY THE COMPONENT REVIEW TEAM (CRT). THESE ITEMS WILL BE SUBJECT TO CONTROL AND DOCUMENTATION AS SPECIFIED IN THE CONTROL PLAN.

CC — CONTROL ITEM: THIS SYMBOL IDENTIFIES CRITICAL (SAFETY RELATED) CHARACTERISTICS AS DESIGNATED BY THE COMPONENT REVIEW TEAM (CRT). THESE ITEMS WILL BE SUBJECT TO CONTROL AND DOCUMENTATION AS SPECIFIED IN THE CONTROL PLAN.

PART TO BE FREE OF CRACKS, BURRS AND SHARP EDGES THAT MAY BE DETRIMENTAL TO SATISFACTORY ASSEMBLY, SAFE HANDLING OR FUNCTION.

ELECTRONIC FORMAT DATA IS MASTER AND IS TO BE TAKEN FROM DATA FILE AT ITS LATEST RELEASE DATE.

REFER TO CAD DATA FOR DIMENSIONS NOT SHOWN. ALL CAD DATA MEASUREMENTS ARE BASIC. TOLERANCES FOR CAD DATA MEASUREMENTS ARE:

1.0	SURFACES
2.0	TRIM LINES

ANY CHANGES TO DESIGN, MATERIAL OR PROCESSING, REQUIRES WRITTEN APPROVAL FROM MAGNA SEATING ENGINEERING.

PART TO BE STAMPED OR OTHERWISE MARKED WITH PART NUMBER, REVISION LEVEL & LOT CODE.

FINISH: NONE

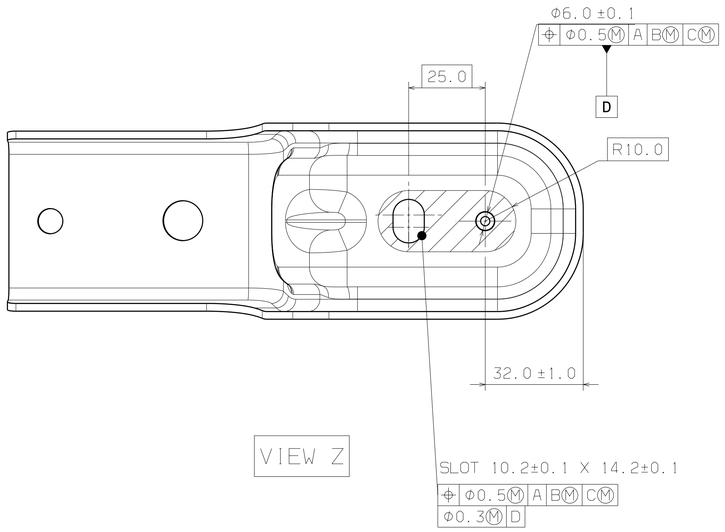

VIEW Z

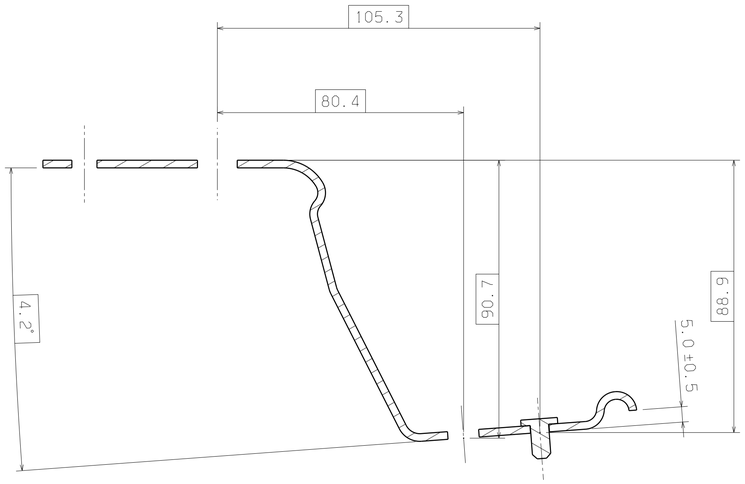

SECTION CUT A-A

PRELIMINARY

CHANGE NO.	REV	REVISION	DATE	DRW	DA	EA
XXXXXX	M1	RELEASED FOR	201211	XXX	XXX	XXX

CAD MODEL IS BASIC.
REFER TO DRAWING NOTES
FOR TOLERANCE INFORMATION

- DO NOT SCALE THIS DRAWING-

DIMENSIONING & TOLERANCING PER ASME Y14.5M-1994

DRAWN BY	DATE	CHECKED BY	APPROVED BY
X.XXXXX	DDMMYY	XXX	XXX

THIS DRAWING IS COPYRIGHTED AND REMAINS THE EXCLUSIVE PROPERTY OF MSKH SEATING. ANY AUTHORIZED COPYING, REPRODUCING OR OTHER MISUSE IS PROHIBITED AND WILL BE PROSECUTED.

UNLESS OTHERWISE SPECIFIED DIMENSIONS ARE IN MILLIMETERS

MATERIAL E34
Thk=2.5 Wt=0.377Kg

MSKH SEATING

SCALE 1:1

PART NAME	PART NUMBER	REV	NAME	DRAWING NO.
DRIVER_SEAT_REAR_RISER_RH	D2MW-40233-M1	X	DRIVER_SEAT_REAR_RISER_RH	D2MW-40233-M1