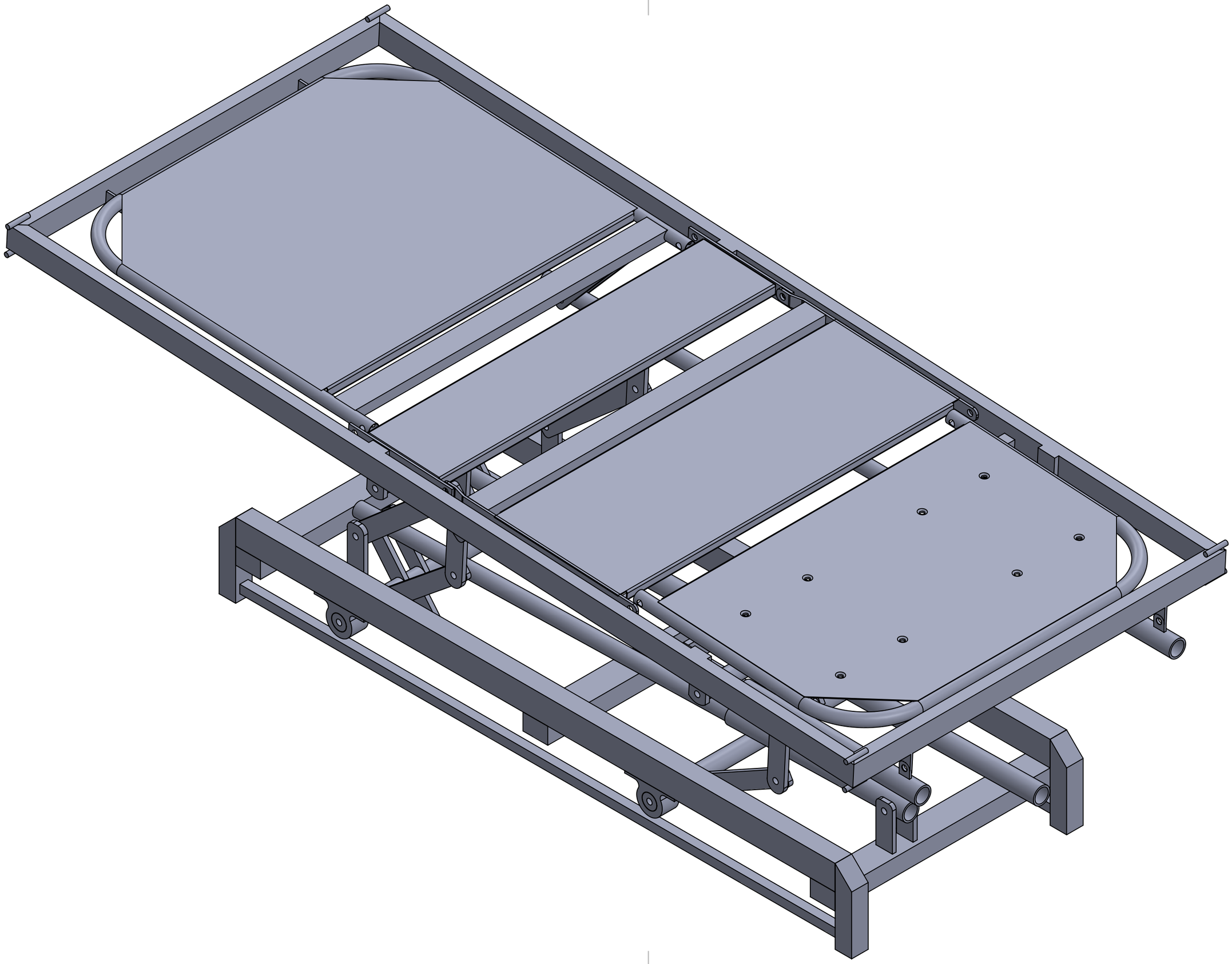

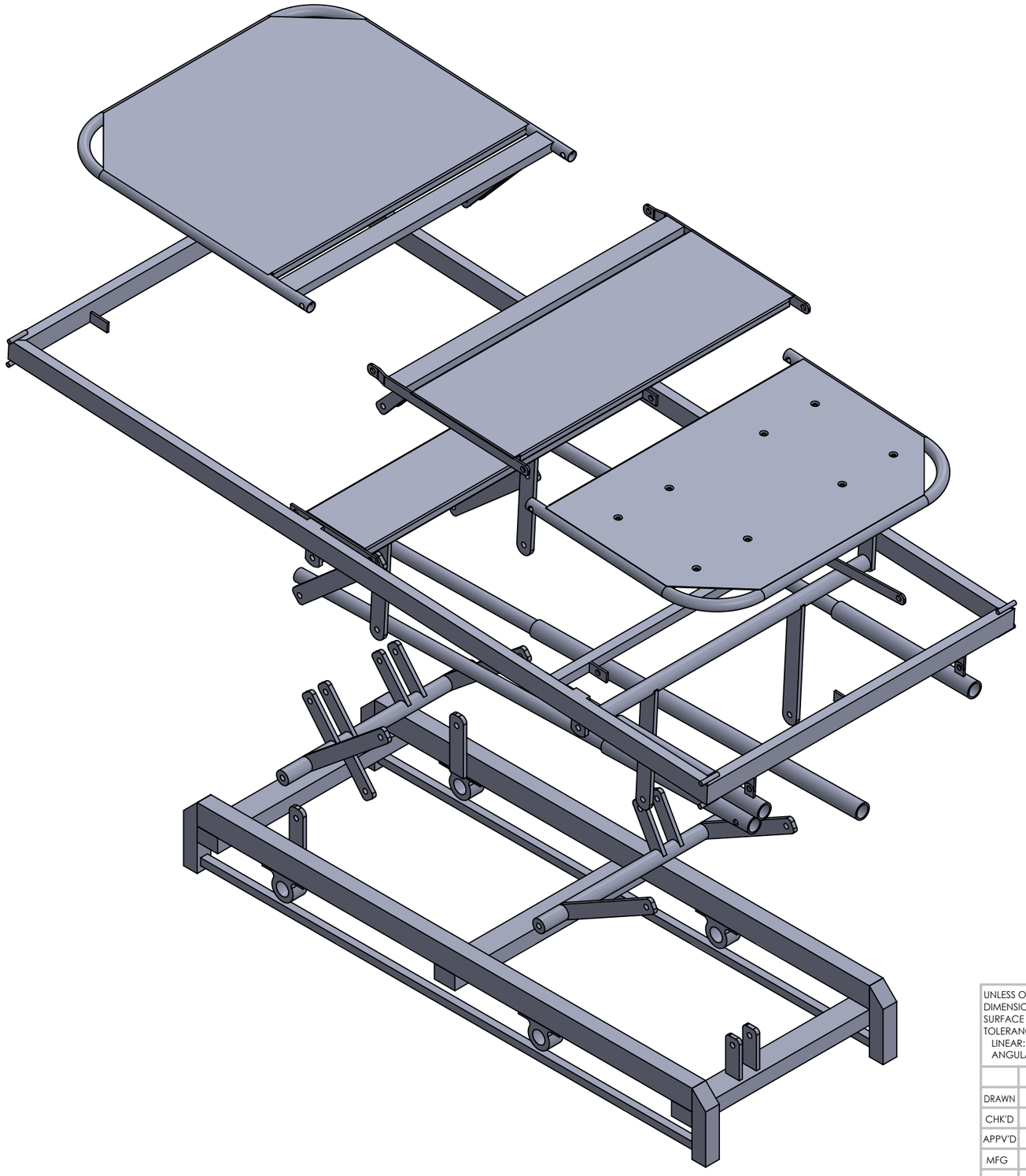

UNLESS OTHERWISE SPECIFIED: DIMENSIONS ARE IN MILLIMETERS SURFACE FINISH: TOLERANCES: LINEAR: ANGULAR:	FINISH:			DEBURR AND BREAK SHARP EDGES	DO NOT SCALE DRAWING	REVISION	
	NAME	SIGNATURE	DATE		TITLE:		
DRAWN							
CHK'D							
APPV'D							
MFG							
Q.A				MATERIAL:	DWG NO. Part_1		A3
				WEIGHT:	SCALE:1:20	SHEET 2 OF 15	

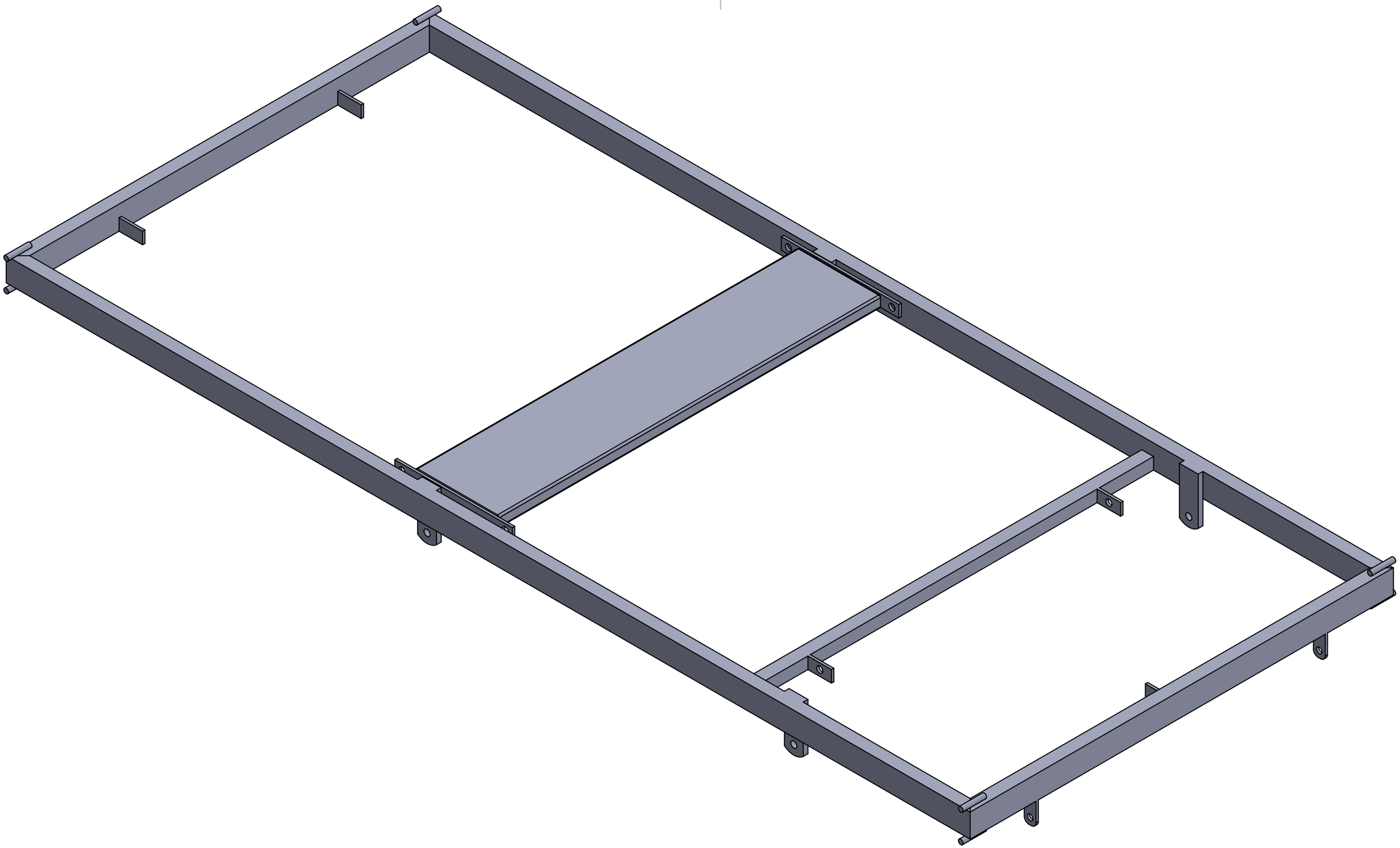

UNLESS OTHERWISE SPECIFIED: DIMENSIONS ARE IN MILLIMETERS SURFACE FINISH: TOLERANCES: LINEAR: ANGULAR:	FINISH:		DEBURR AND BREAK SHARP EDGES	DO NOT SCALE DRAWING	REVISION	
	NAME	SIGNATURE	DATE	TITLE:		
DRAWN						
CHK'D						
APPV'D						
MFG						
Q.A				MATERIAL:	DWG NO. Part_1	A3
				WEIGHT:	SCALE:1:20	SHEET 3 OF 15

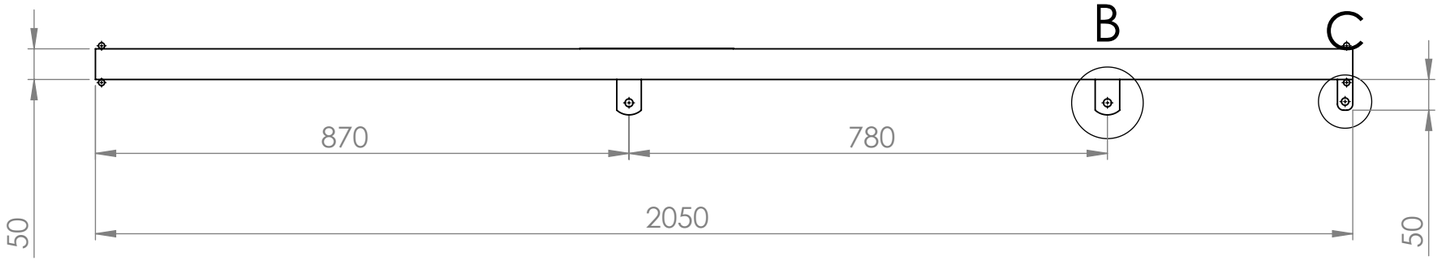

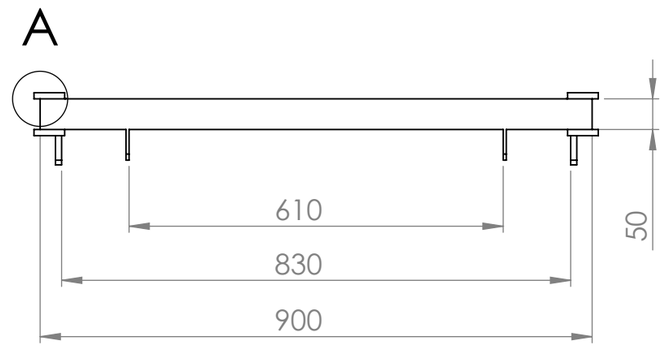

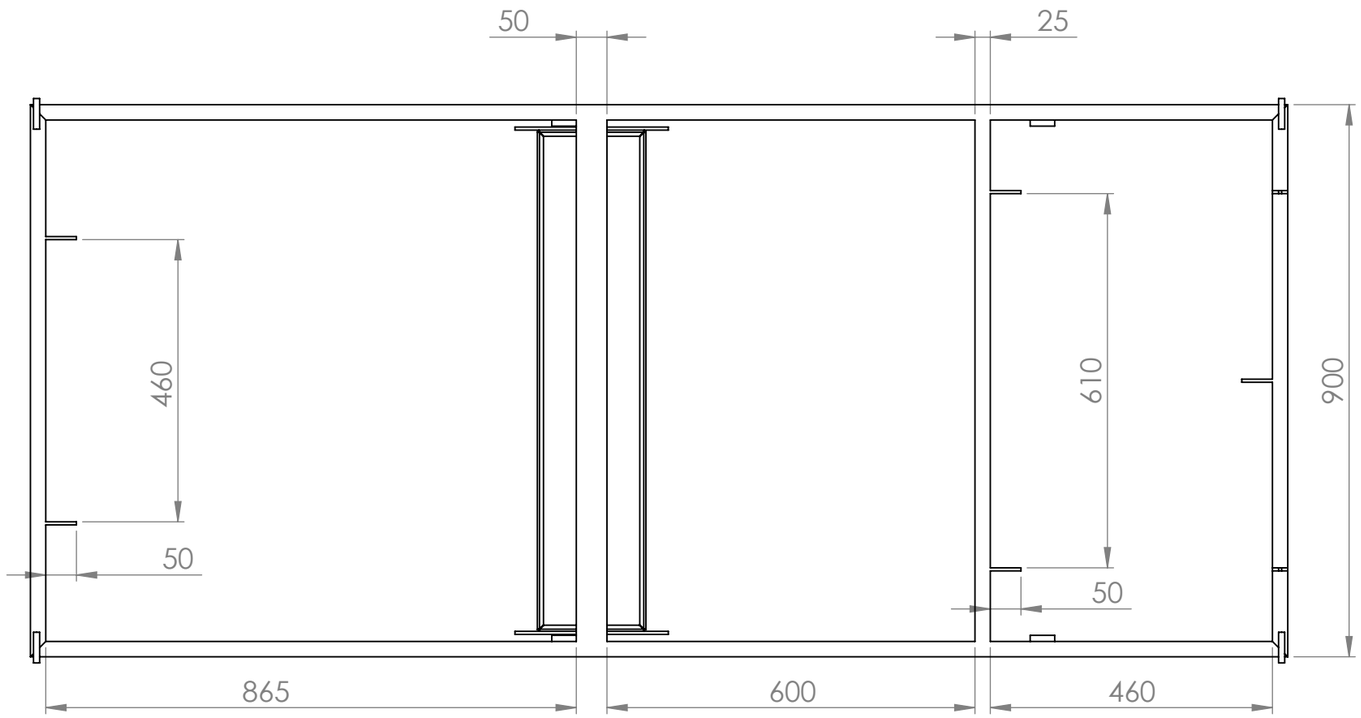

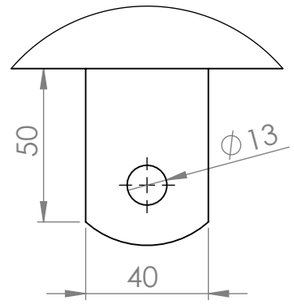

DETAIL B

SCALE 1 : 2

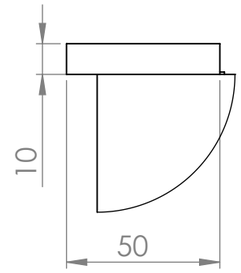

DETAIL A

SCALE 1 : 2

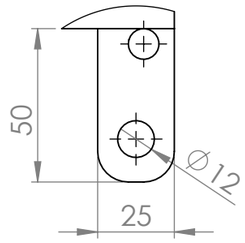

DETAIL C

SCALE 1 : 2

UNLESS OTHERWISE SPECIFIED: DIMENSIONS ARE IN MILLIMETERS SURFACE FINISH: TOLERANCES: LINEAR: ANGULAR:	FINISH:		DEBURR AND BREAK SHARP EDGES	DO NOT SCALE DRAWING	REVISION	
	NAME	SIGNATURE	DATE	TITLE:		
DRAWN						
CHK'D						
APPV'D						
MFG						
Q.A				MATERIAL:	DWG NO. Part_1	A3
				WEIGHT:	SCALE:1:20	SHEET 4 OF 15

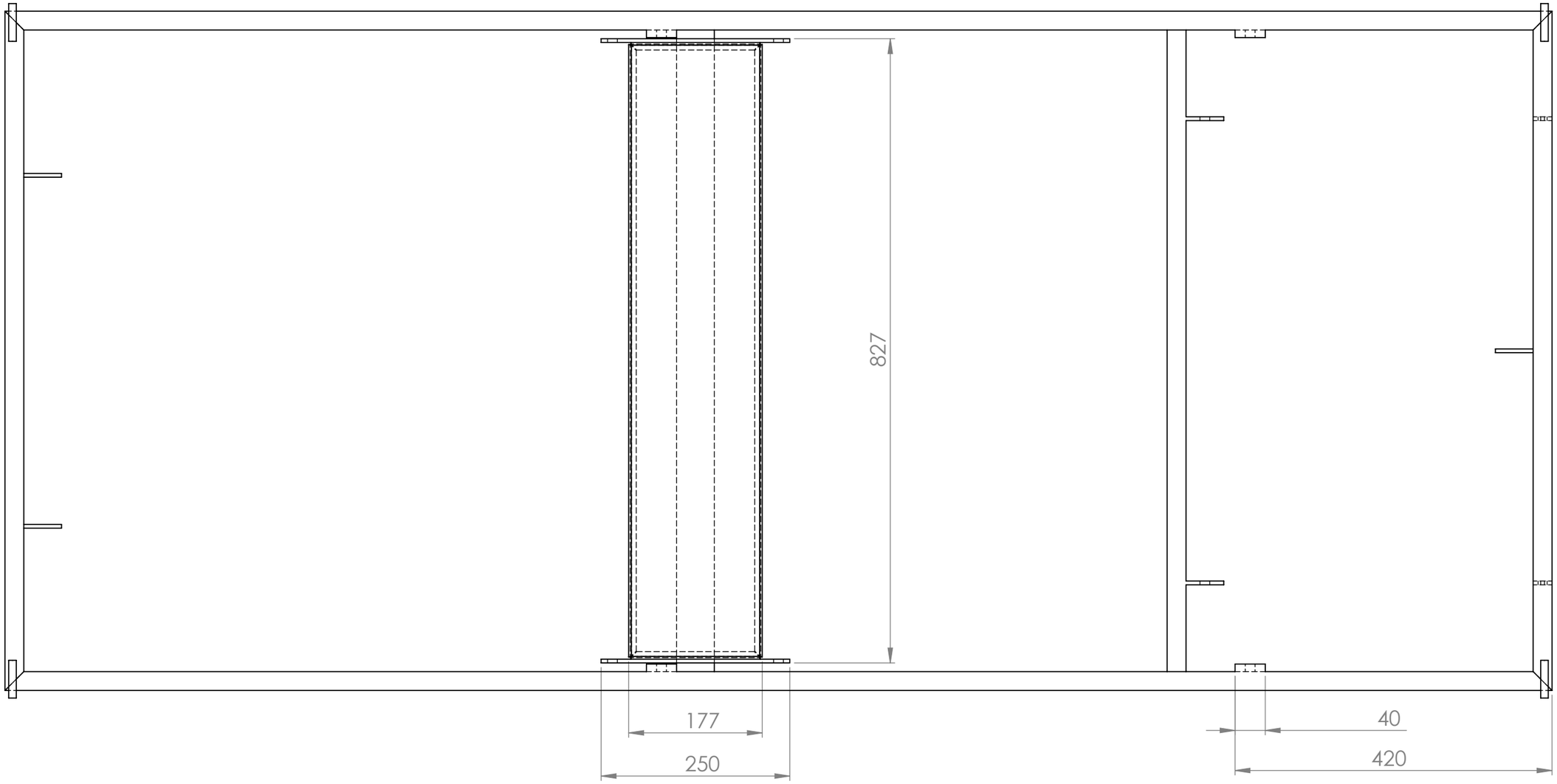

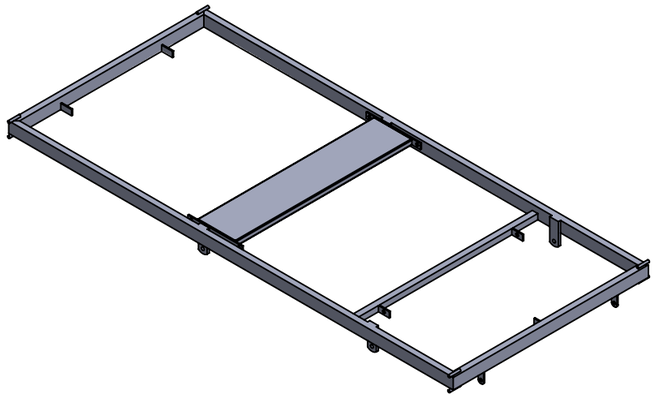

UNLESS OTHERWISE SPECIFIED: DIMENSIONS ARE IN MILLIMETERS SURFACE FINISH: TOLERANCES: LINEAR: ANGULAR:	FINISH:			DEBURR AND BREAK SHARP EDGES		DO NOT SCALE DRAWING	REVISION
	NAME	SIGNATURE	DATE			TITLE:	
DRAWN							
CHK'D							
APPV'D							
MFG							
Q.A				MATERIAL:		DWG NO. Part_1	A3
				WEIGHT:		SCALE:1:20	SHEET 5 OF 15

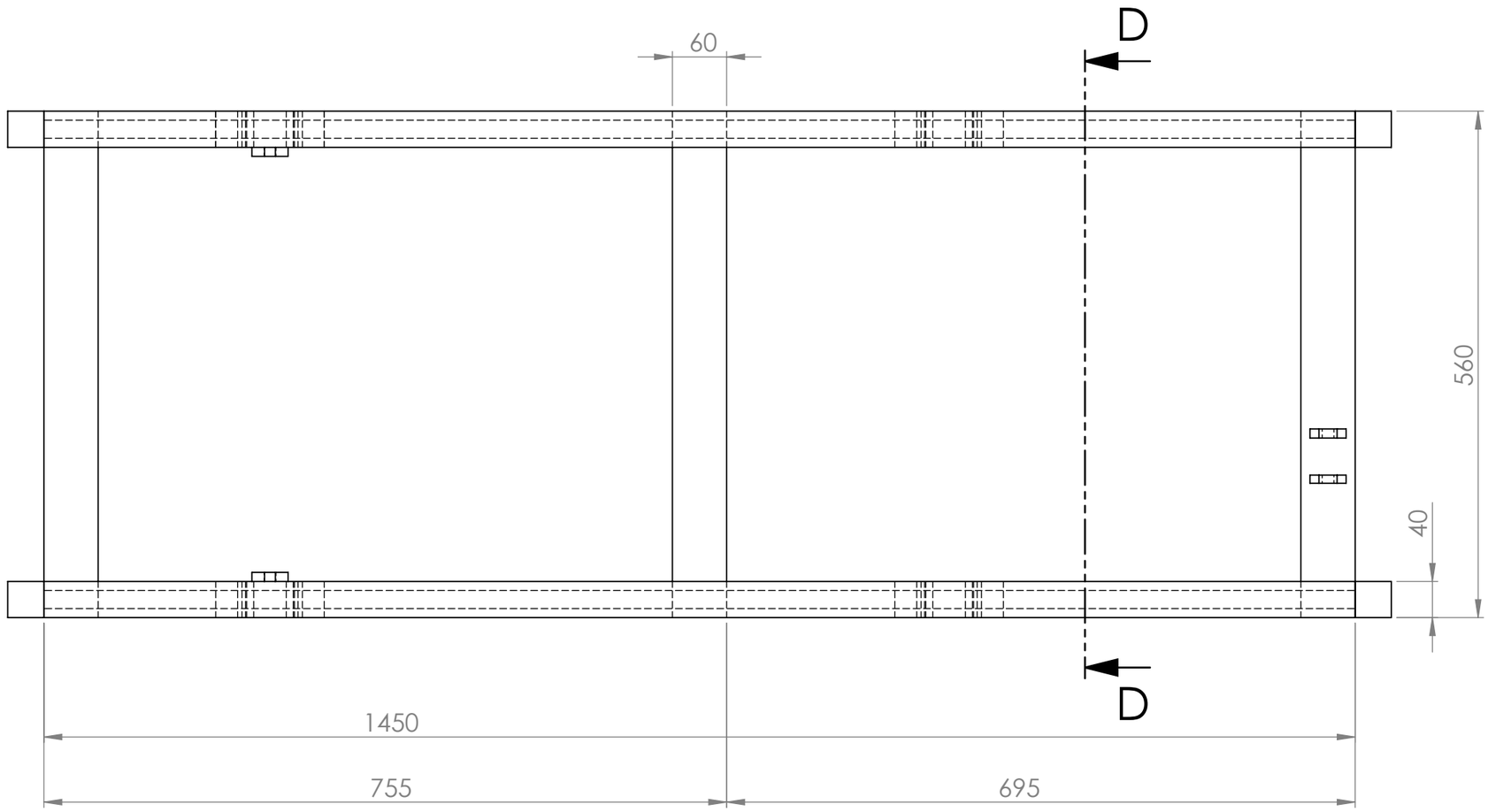

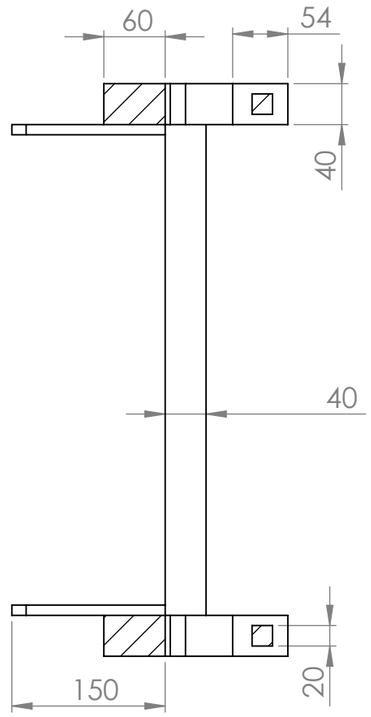

SECTION D-D

SCALE 1 : 6

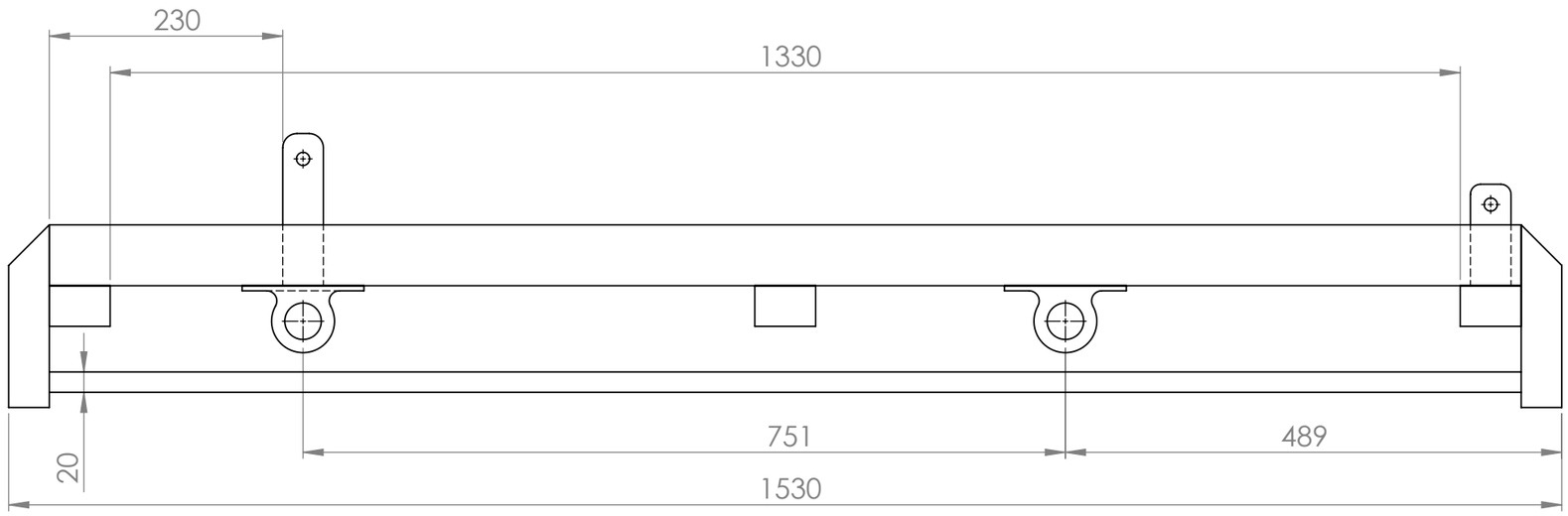

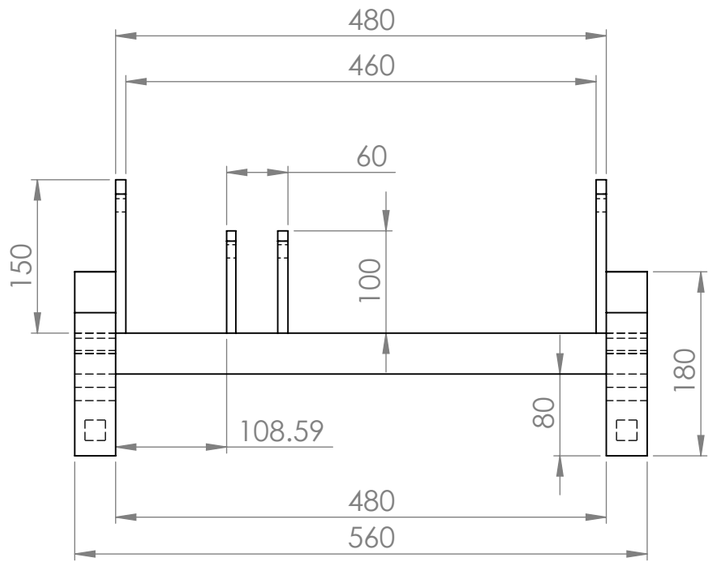

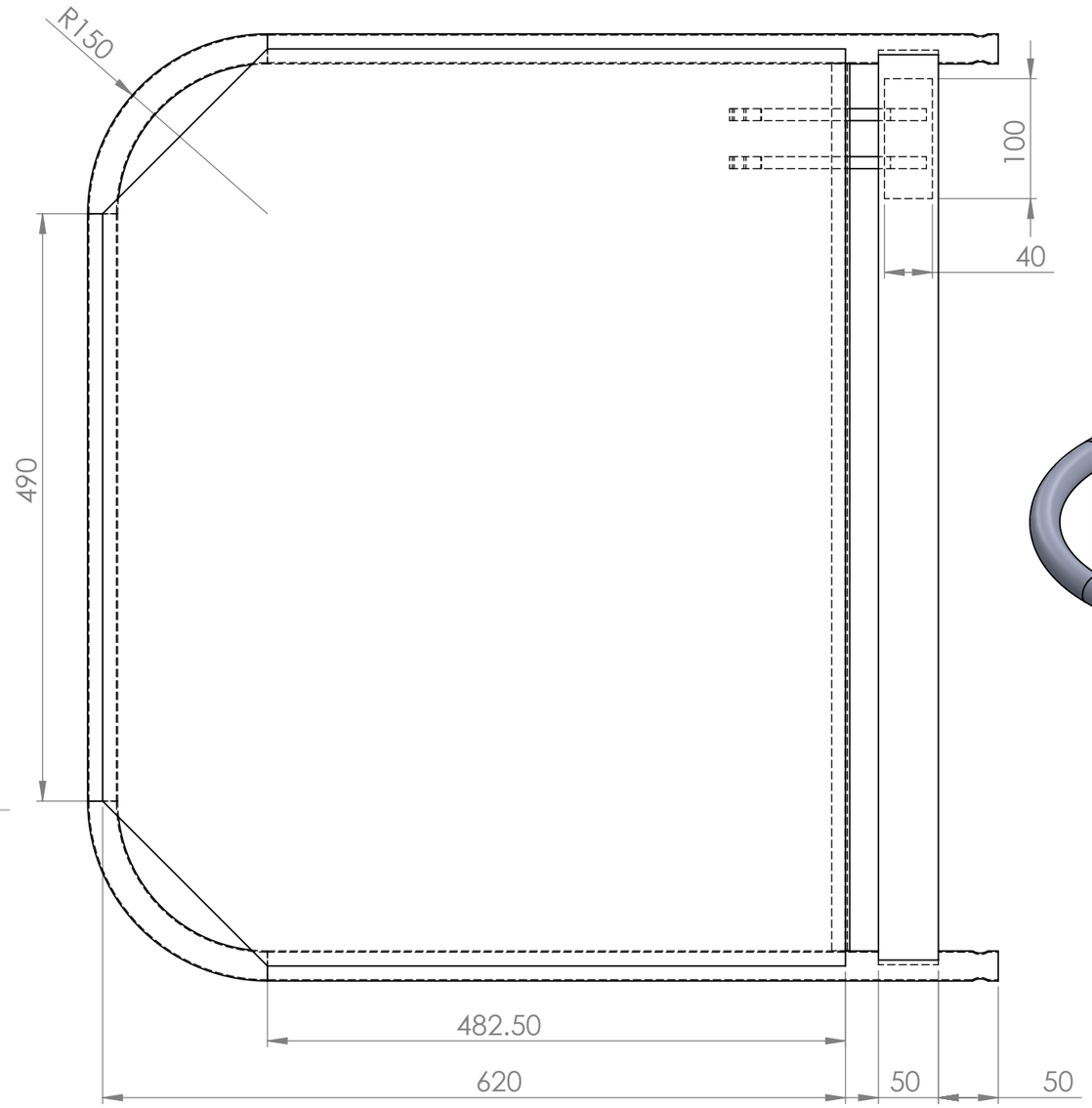
R150
100
40
490
482.50
620
50
50

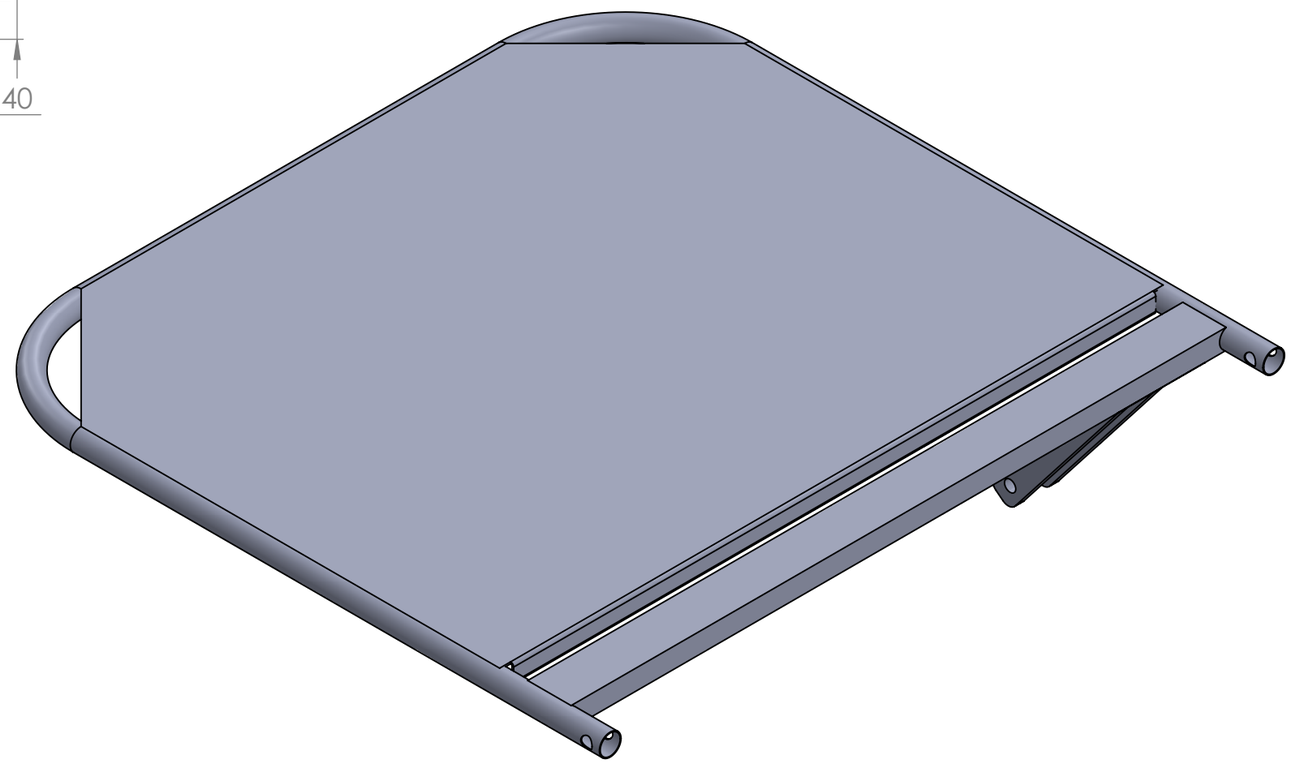

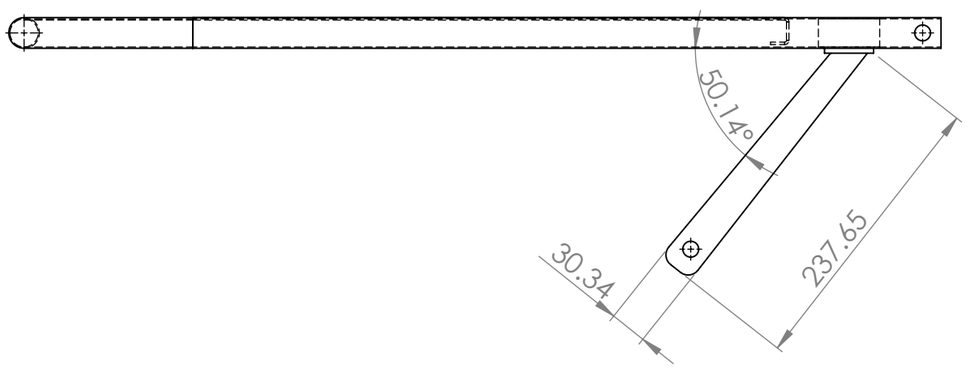
50.14°
30.34
237.65

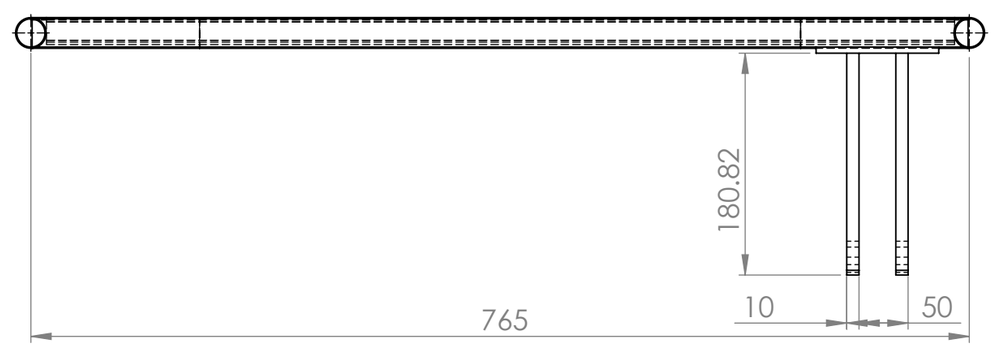
180.82
765
10
50

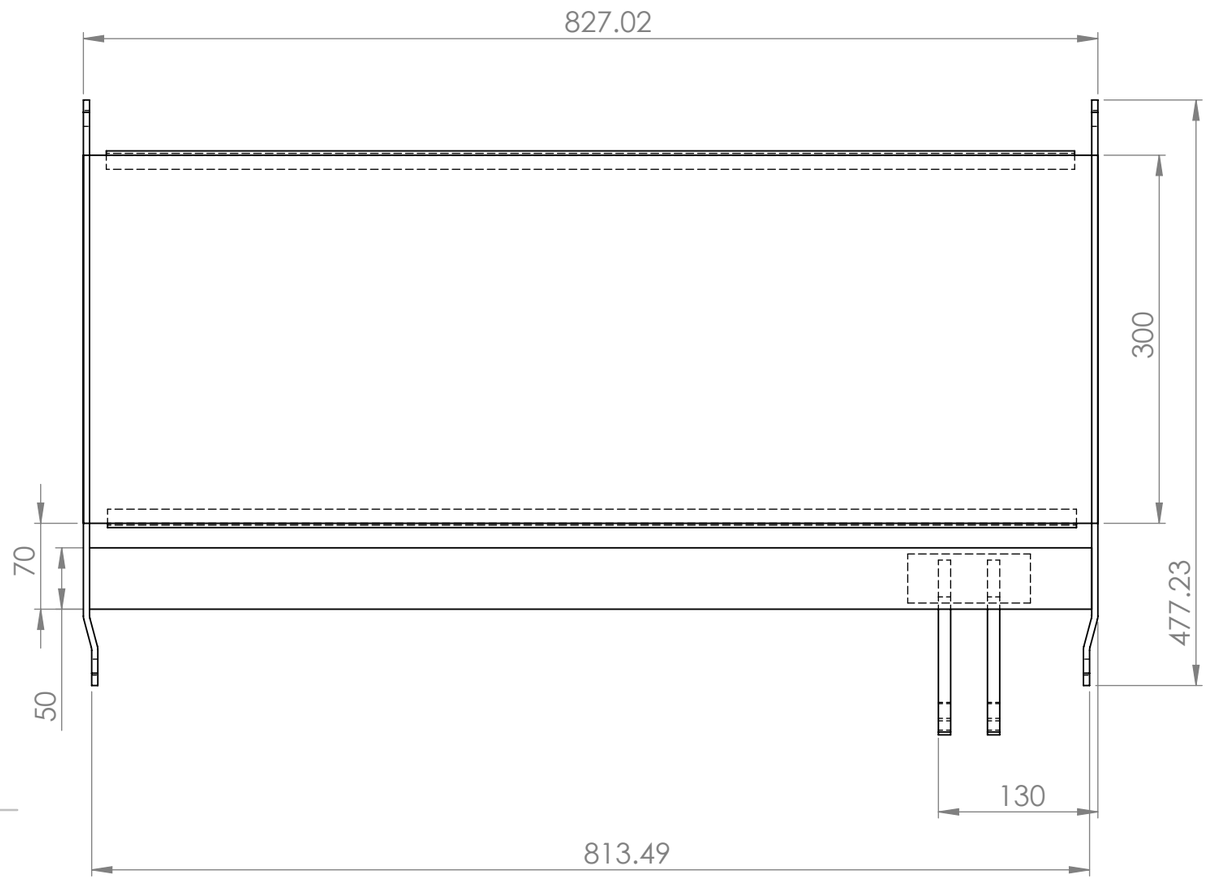
827.02
300
477.23
70
50
130
813.49

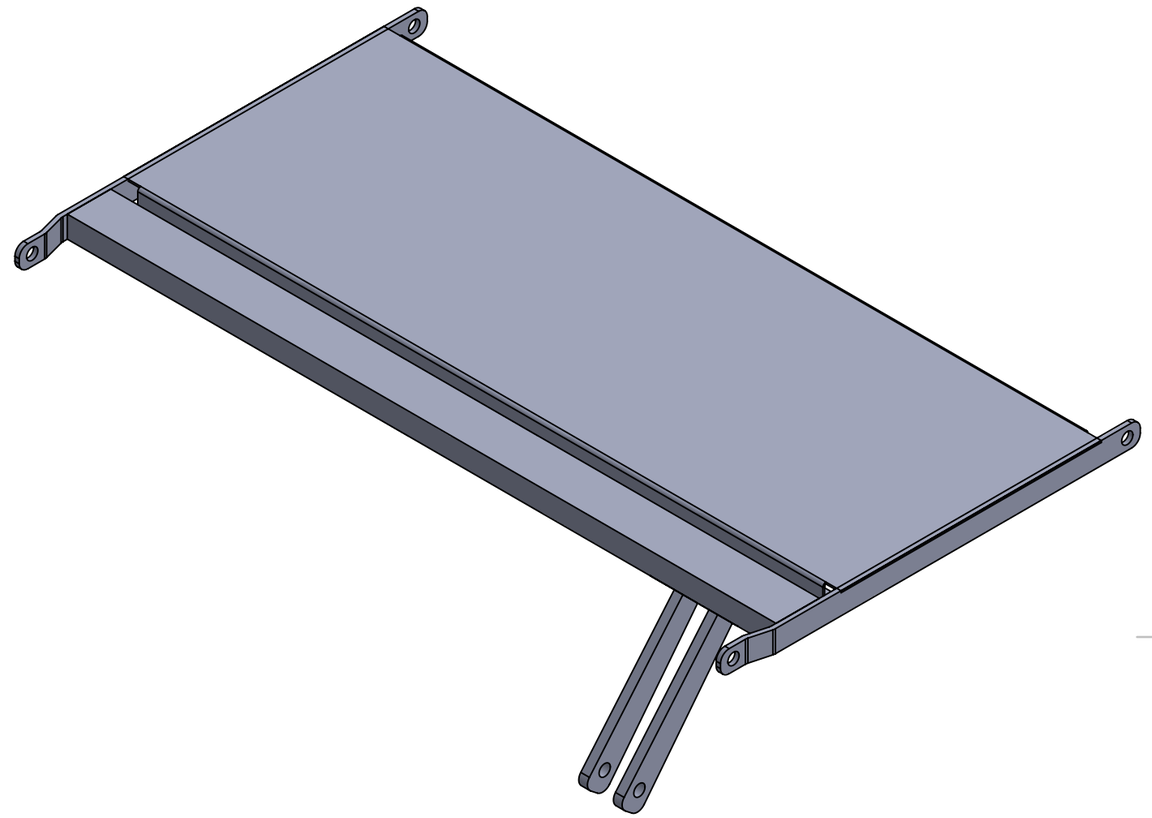

100
5
30
50

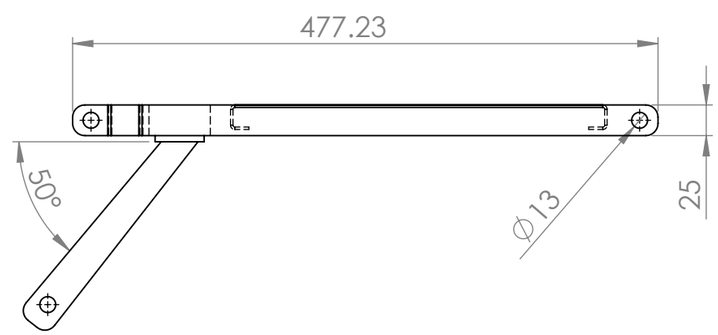
477.23
50°
Ø13
25

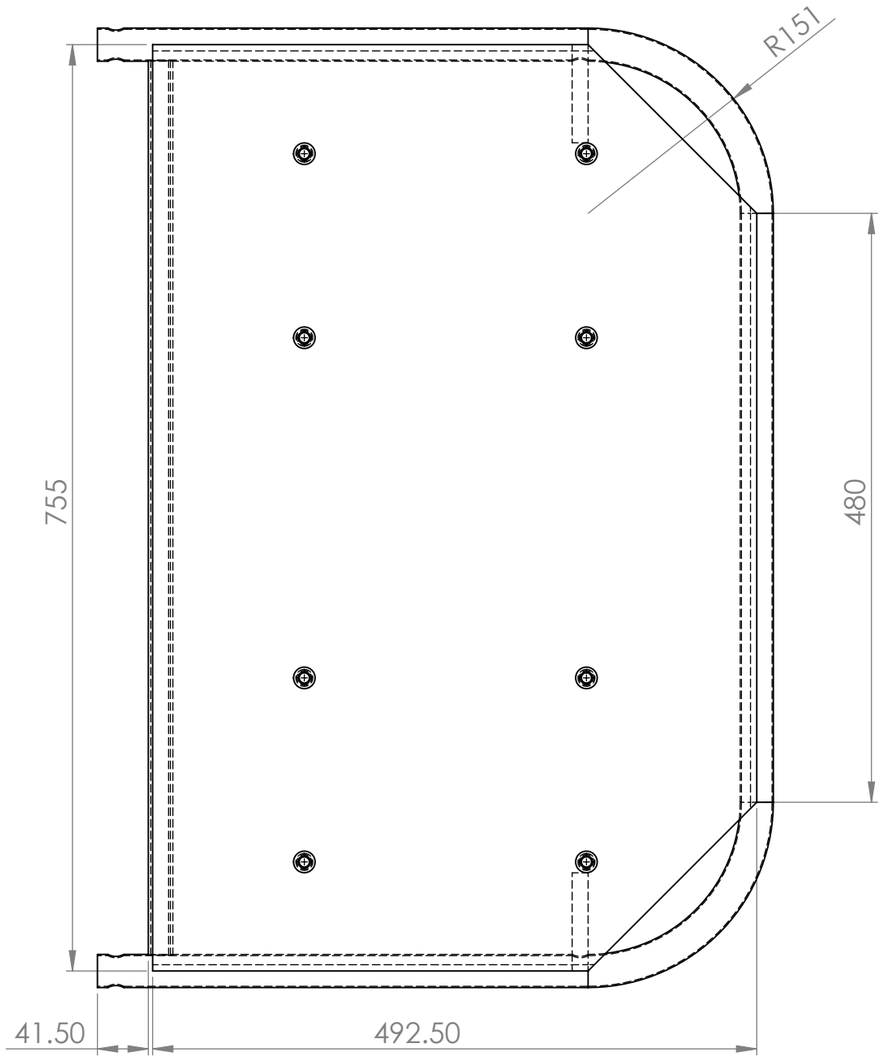
R151
755
480
41.50
492.50

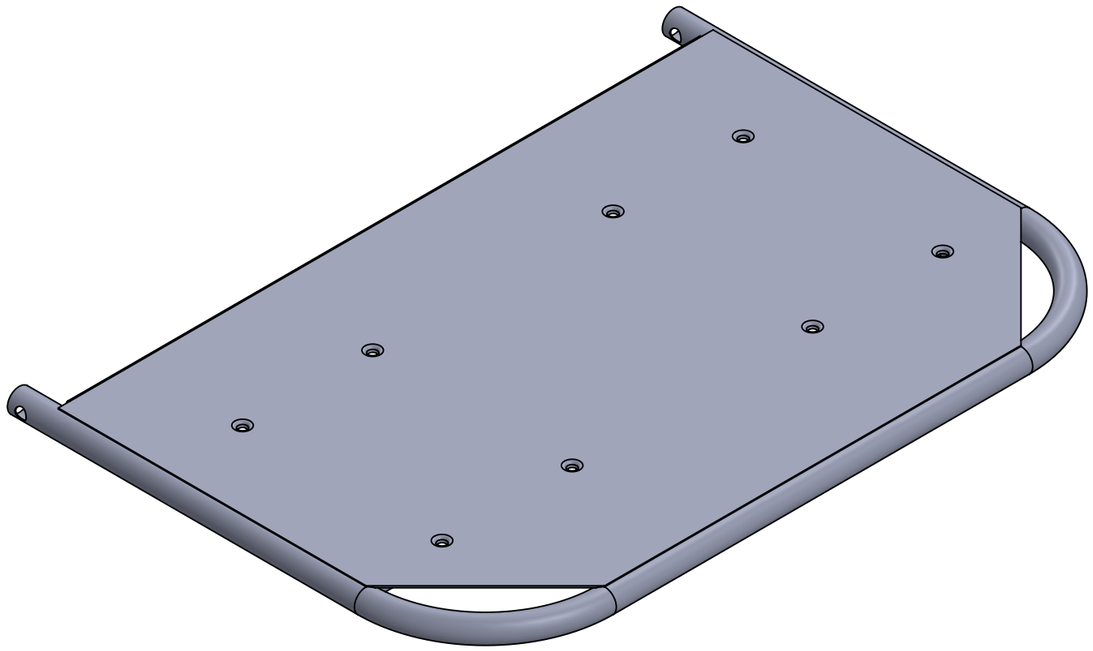

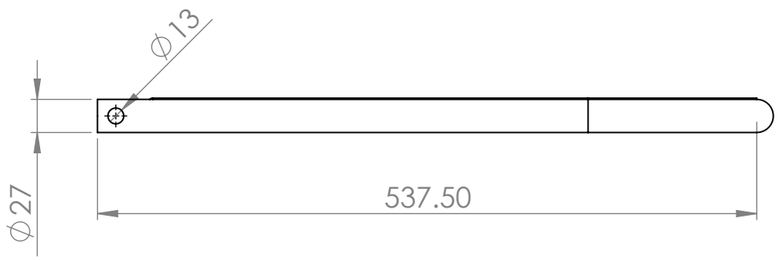
Ø13
Ø27
537.50

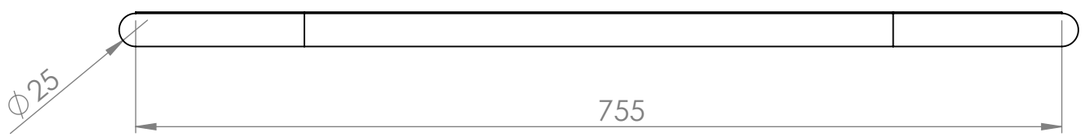
Ø25
755

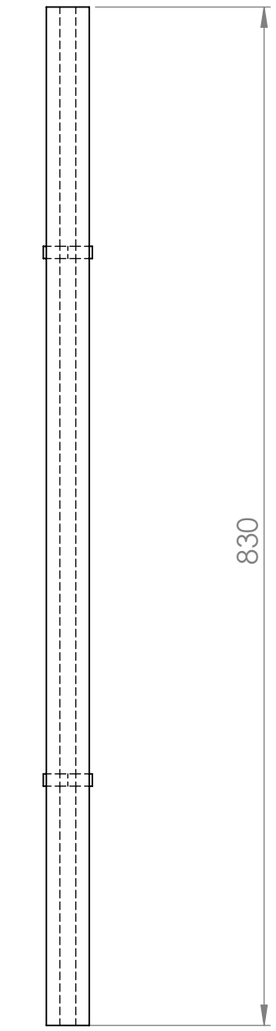
830

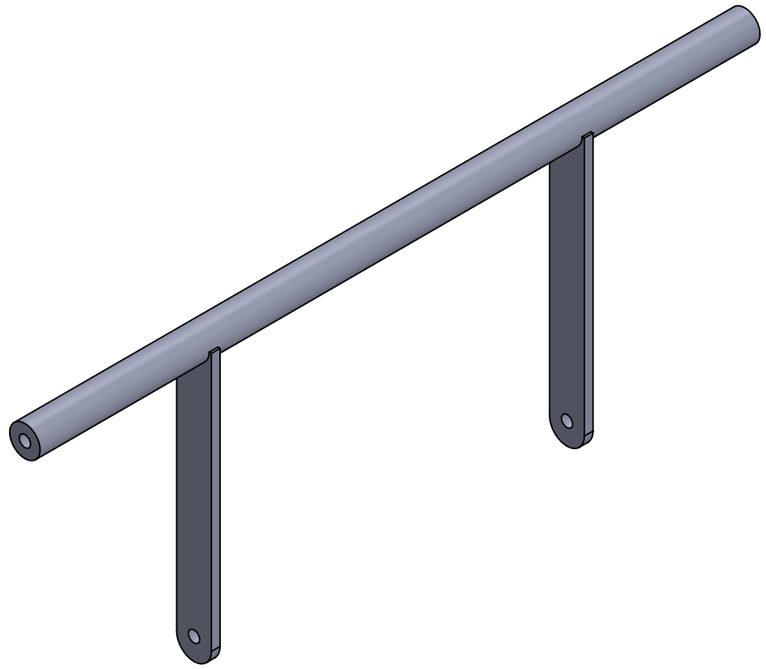

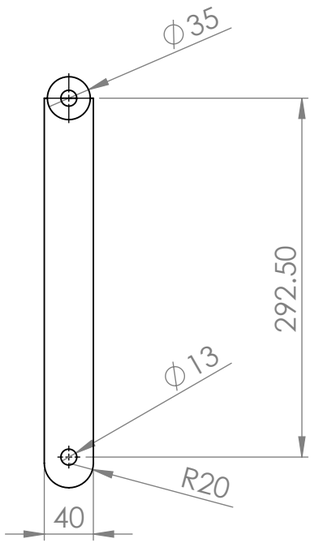
ϕ35
292.50
ϕ13
R20
40

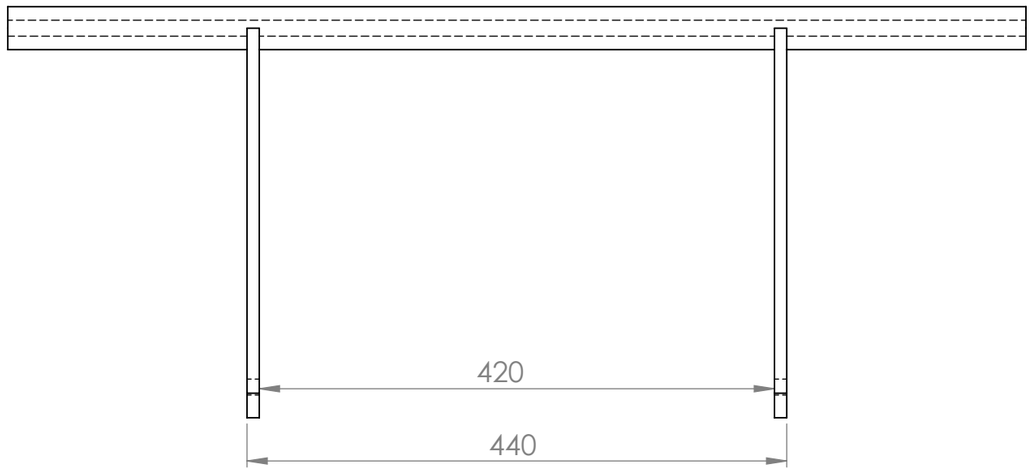
420
440

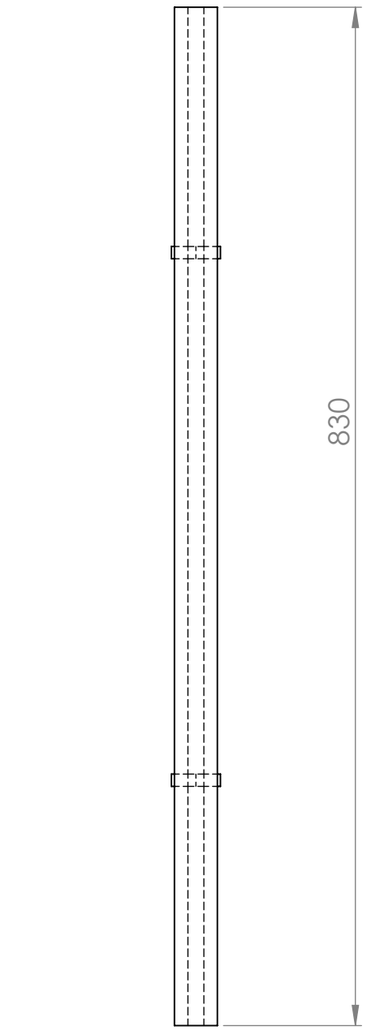
830

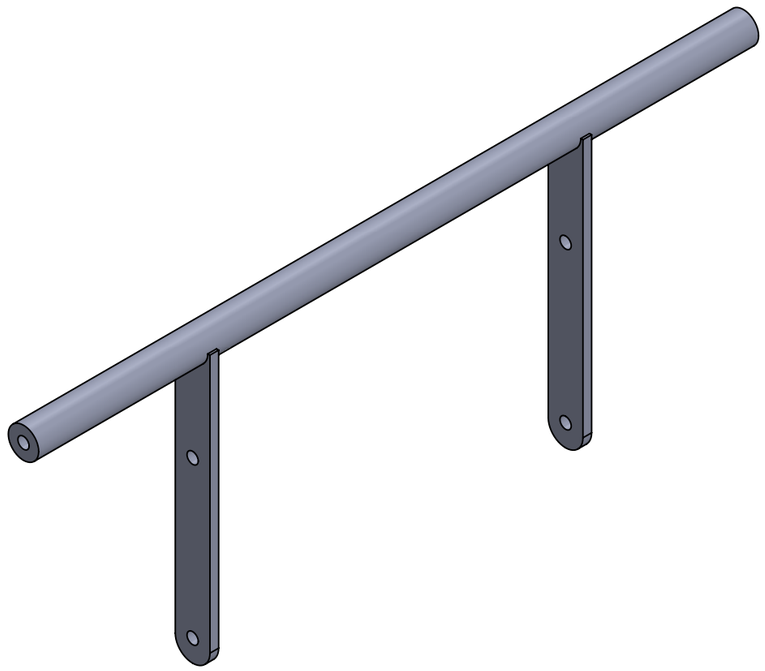

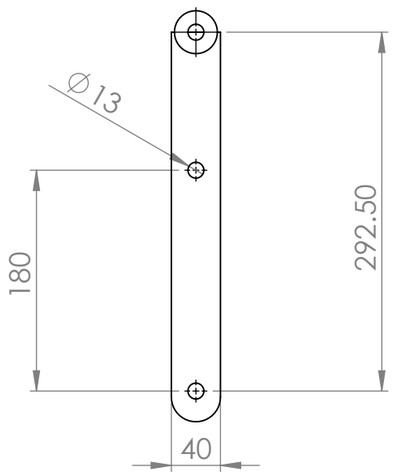
Ø13
180
292.50
40

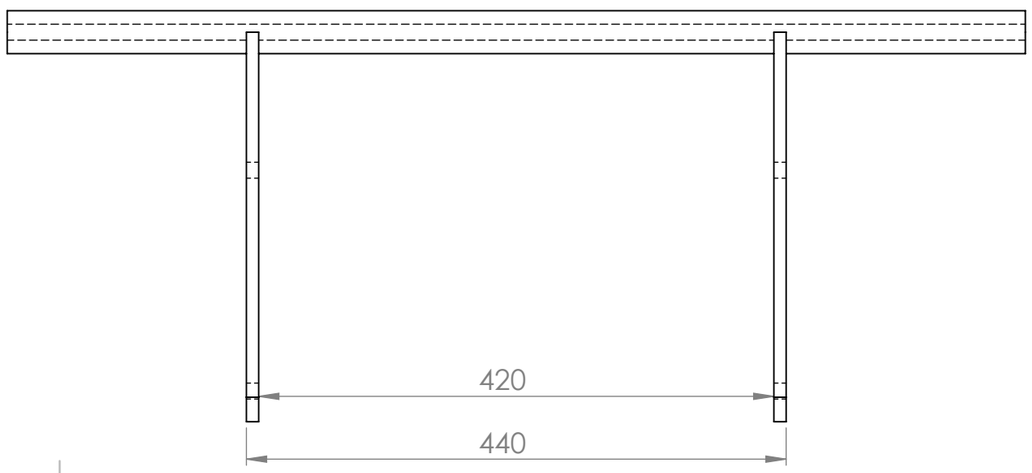
420
440

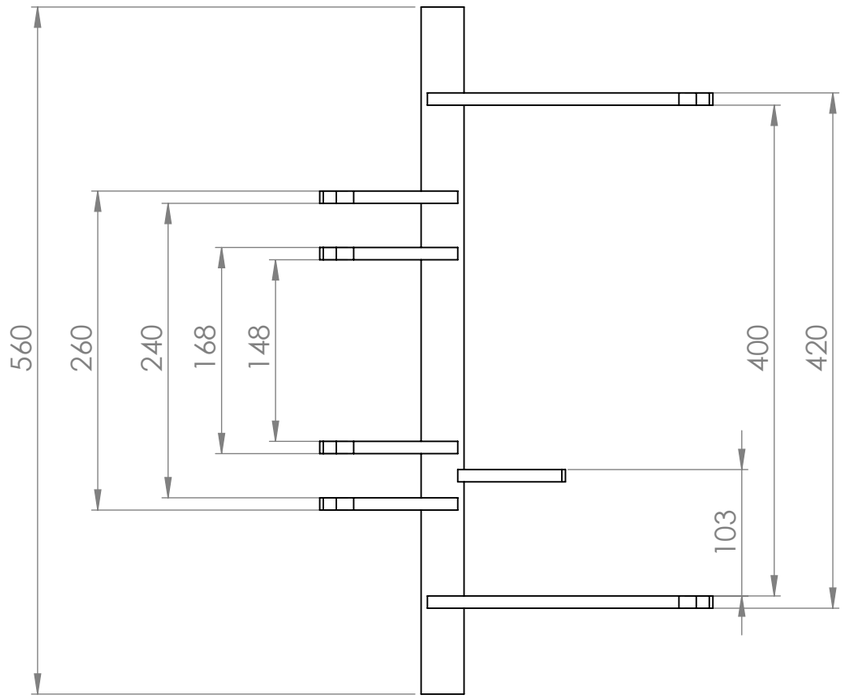
560
260
240
168
148
400
420
103

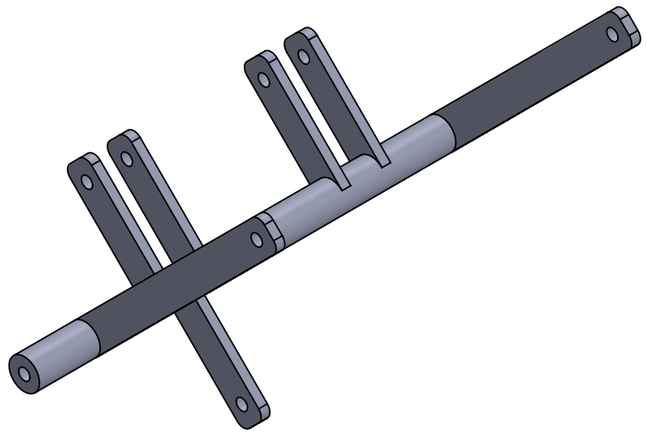

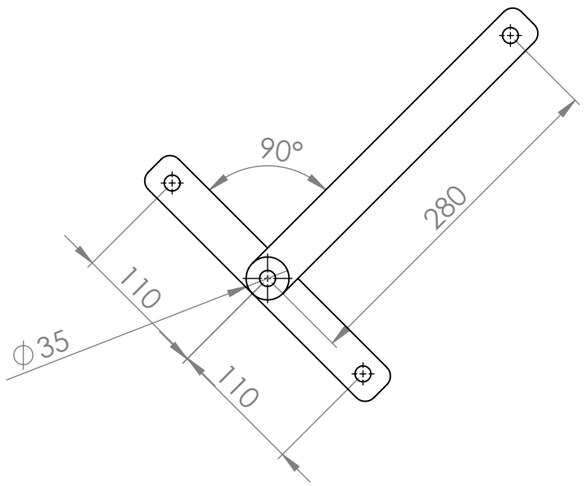
90°
280
110
110
ϕ35

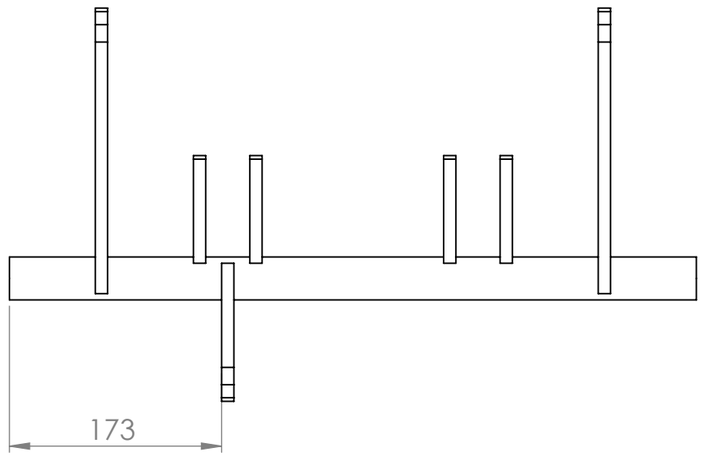
173

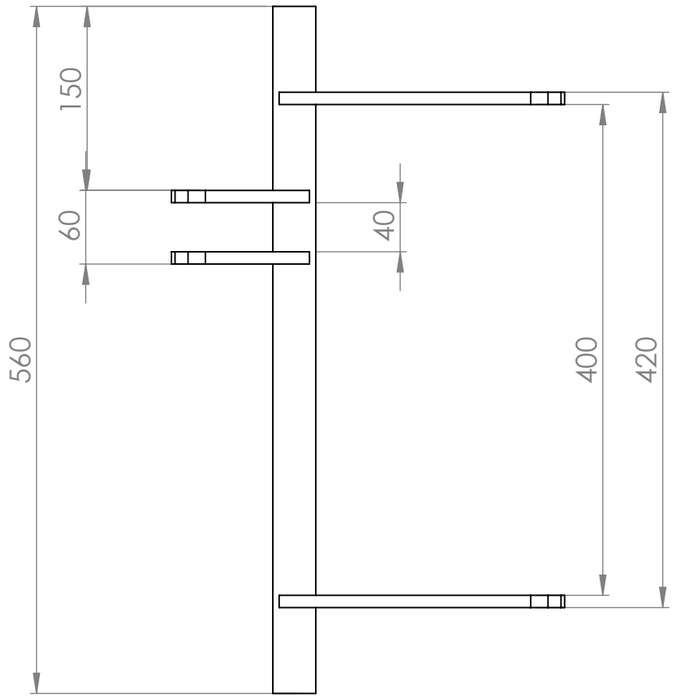
150
60
40
560
400
420

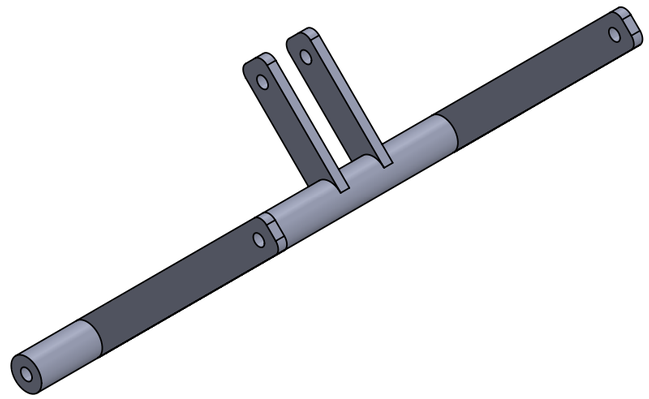

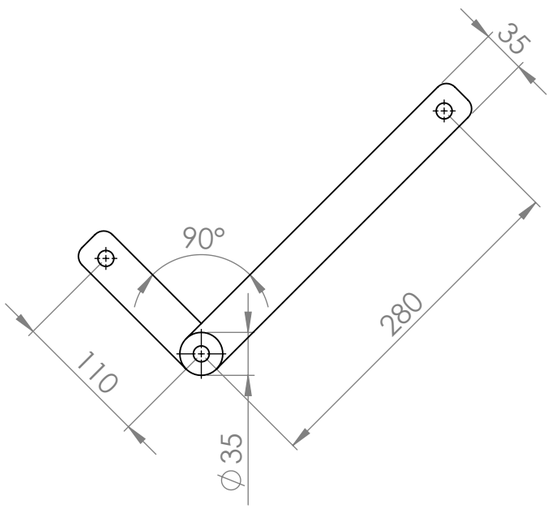
35
90°
280
110
⌀35

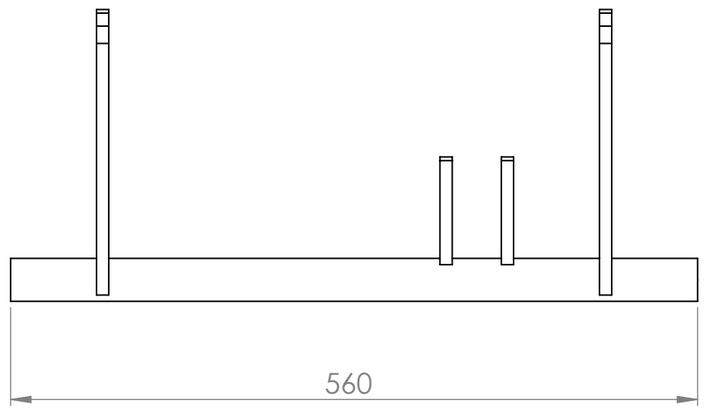
560

330

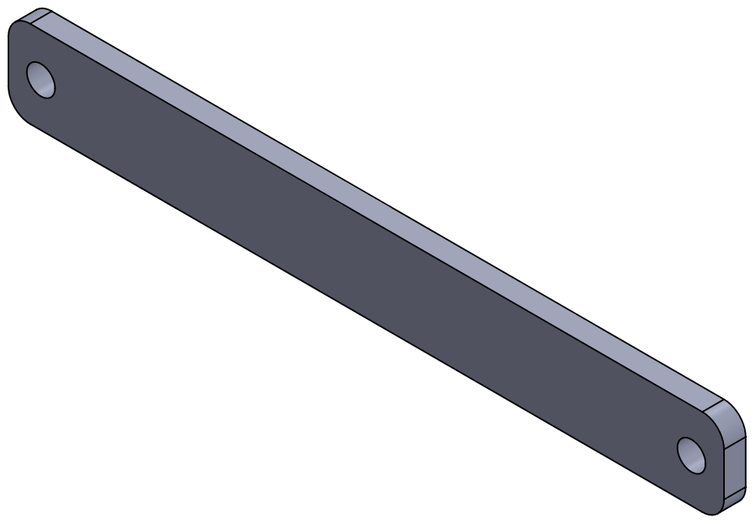

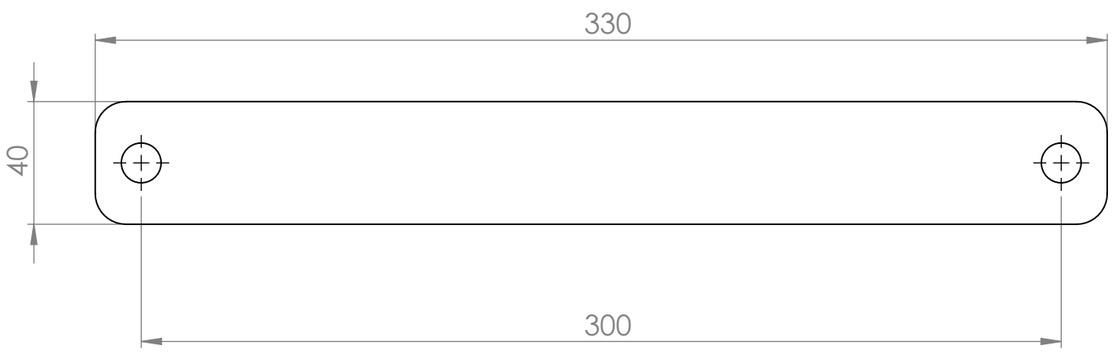
330
40
300

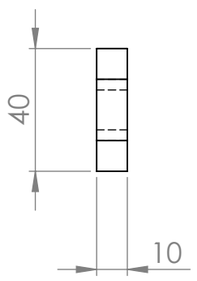
40
10

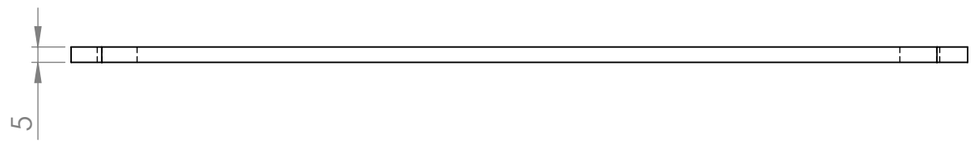
5

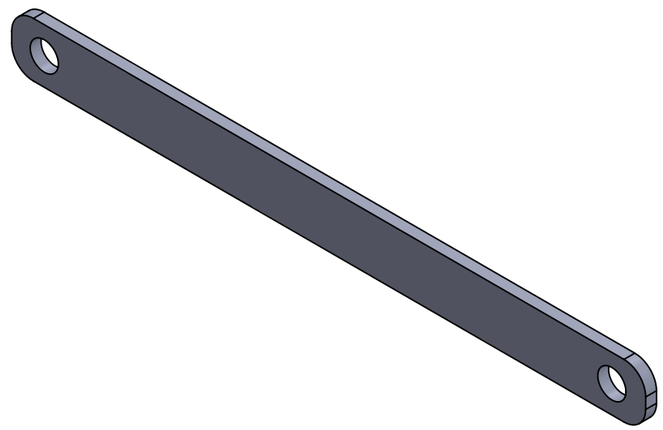

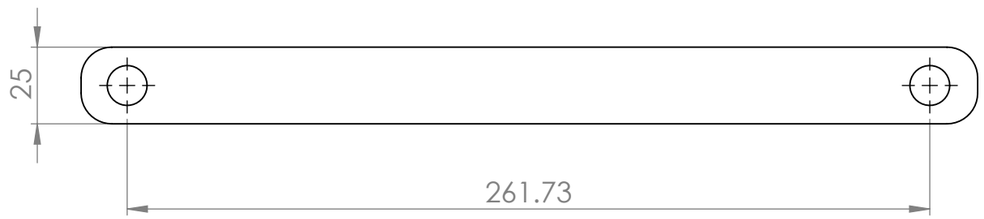
25
261.73

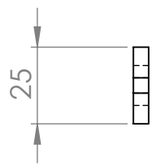
25