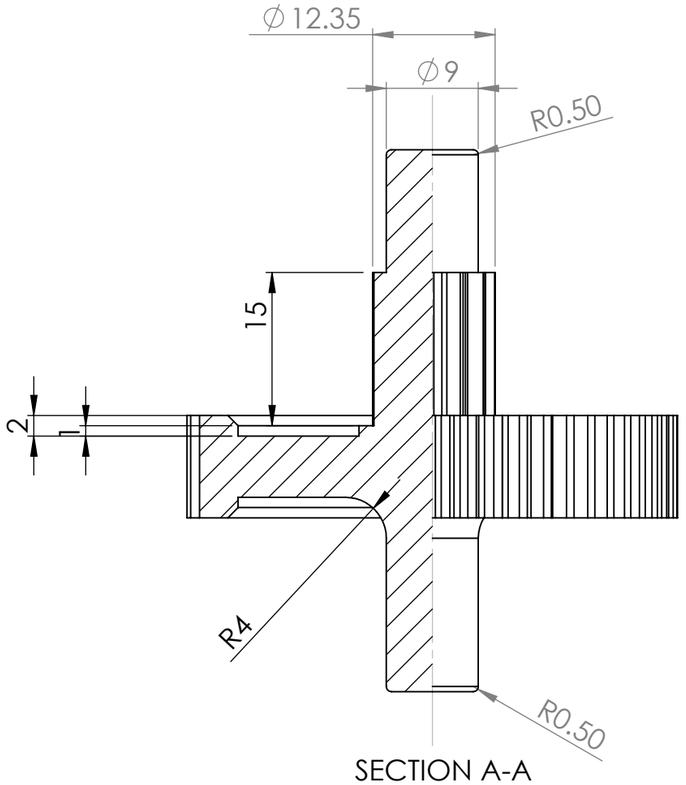

SECTION A-A
SCALE 2 : 1.2

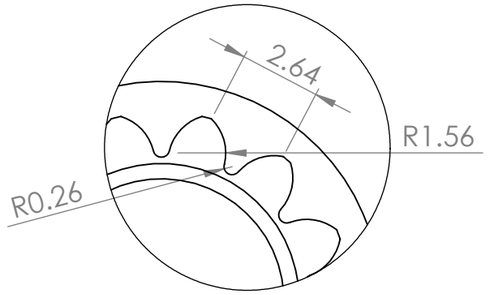

DETAIL B
SCALE 5 : 1

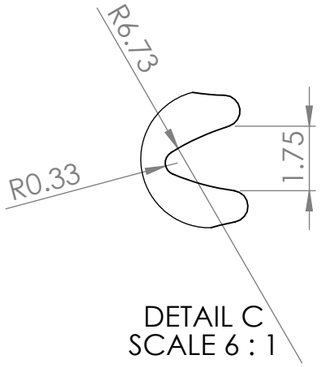

DETAIL C
SCALE 6 : 1

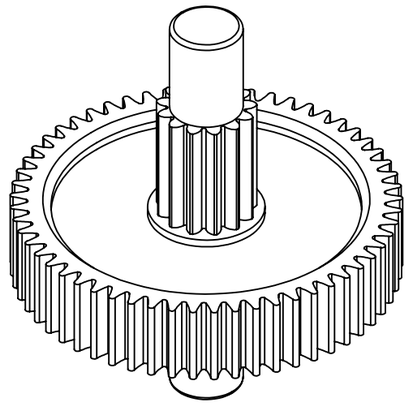

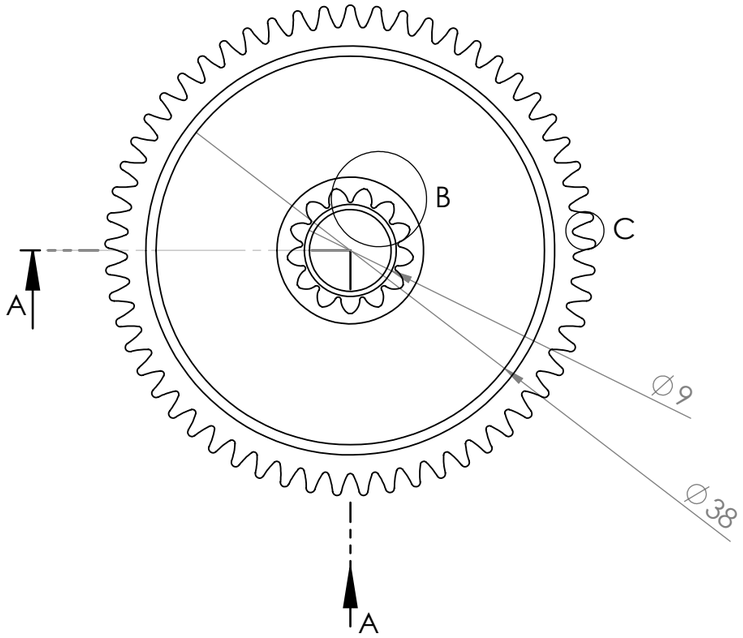

PARAMETERS	GEAR A	GEAR B
TEETH	57	13
OUTSIDE DIA	46.7	12.7
ROOT DIA	43.34	10
PRESSURE ANGLE	20 DEGREE	20 DEGREE
CIRCULAR TOOTH THICKNESS	4.1 DEGREE	21.4 DEGREE

UNLESS OTHERWISE SPECIFIED:
DIMENSIONS ARE IN MILLIMETERS
SURFACE FINISH:
TOLERANCES:
LINEAR:
ANGULAR:

FINISH:

DEBURR AND BREAK SHARP EDGES

DO NOT SCALE DRAWING

REVISION

SHAMUGESHWARAN

	NAME	SIGNATURE	DATE
DRAWN			
CHK'D			
APPV'D			
MFG			
Q.A			

TITLE:

MATERIAL:

WEIGHT:

DWG NO. Part 8

A3

SCALE:1:1

SHEET 1 OF 1