INTELLIGENT FLOATING SYSTEM FOR REAL-TIME INDUSTRIAL WASTE MONITORING AND EARLY PREDICTION OF CONTAMINATION OF WATER BODIES

DOMAIN: SUSTAINABLE DEVELOPMENT

TEAM NAME: WILDCARD

1 TEAM MEMBER - PRATHVI RAJ MV
2 TEAM MEMBER - CHARVI S
3 TEAM MEMBER - PRATEEK N VASISTA
4 TEAM MEMBER - SUSHMA M

MOTIVATION

PROBLEM STATEMENT:

INDUSTRIAL WATER POLLUTION IS OFTEN DETECTED TOO LATE, AS SMALL LEAKS AND GRADUAL CONTAMINATION GO UNNOTICED UNTIL SERIOUS DAMAGE HAS ALREADY OCCURRED.

WHY IT MATTERS

- LEADS TO UNSAFE WATER AND HEALTH RISKS
- DAMAGES AQUATIC LIFE AND ECOSYSTEMS
- AFFECTS AGRICULTURE AND WATER SUPPLY

WHO IS AFFECTED

- LOCAL COMMUNITIES
- FARMERS
- INDUSTRIES
- THE ENVIRONMENT

TECHNOTSAV

MOTIVATION

FOAM BLANKET FORMED ON RIVERS DUE TO INDUSTRIAL DISCHARGE

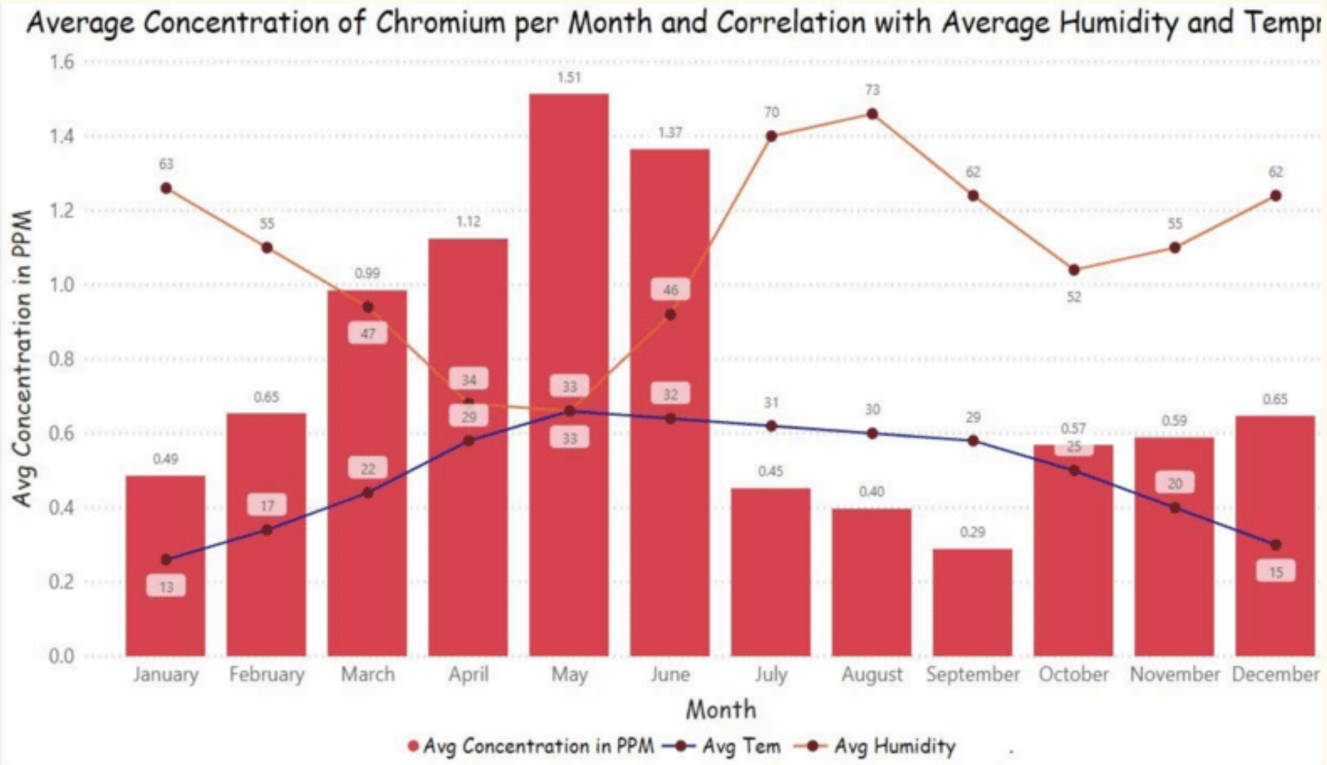

CHROMIUM CONCENTRATION IN RIVER WATER AFTER WASTE DISCHARGE

TECHNOTSAV

PROPOSED SOLUTION

PROPOSED SOLUTION :

WE PROPOSE A FLOATING WATER MONITORING SYSTEM (LIKE A BUOY) THAT CONTINUOUSLY MEASURES WATER QUALITY USING PH AND TDS SENSORS. THE SYSTEM INCLUDES SIMPLE AI ANALYSIS TO DETECT ABNORMAL CHANGES AND PREDICT RISING CONTAMINATION LEVELS. AN SECONDARY (MOUNTED DEVICE) DEVICE MONITORS STRUCTURAL VIBRATIONS TO DETECT STRUCTURAL FAILURES.

KEY FEATURES

- REAL-TIME MONITORING SENSOR DATA (PH, TDS) AND STRUCTURAL FAILURES
- ANOMALY DETECTION USING DATA PATTERNS
- TREND-BASED PREDICTION
- CASCADE ALERTS (SAFE / WARNING / CRITICAL)
- STRUCTURAL MONITORING (SECONDARY DEVICE)

SYSTEM OVERVIEW

- FLOATING NODE COLLECTS WATER DATA
- SECONDARY NODE DETECTS STRUCTURAL ISSUES
- DATA IS PROCESSED USING SIMPLE PREDICTIONS BASED ON LIGHTWEIGHT AI
- ALERTS ARE GENERATED BASED ON CONDITIONS

TECHNOTSAV

FLOWCHART

1. **DATA COLLECTION**
   (FLOATING DEVICE: SENSOR ARRAY)
   (SECONDARY DEVICE: STRUCTRAL ANALYSIS)

2. **SIGNAL TRANSMISSION**
   (DATA SENT FROM TWO DEVICE TO THE CENTRAL DEVICE)

3. **DATA PROCESSING**
   READ SENSOR VALUES
   CALCULATE CHANGES (ΔPH, ΔTDS)
   FILTER NOISE / AVERAGE VALUE

4. **DECISION LOGIC**
   CHECK THRESHOLDS (PH, TDS LIMITS)
   ANALYZE TRENDS (INCREASING CONTAMINATION)
   COMBINE INPUTS (WATER + STRUCTURE)

5. **OUTPUT / ALERT**
   DISPLAY STATUS: SAFE / WARNING / CRITICAL / DISASTER
   ACTIVATE LED / BUZZER ALERTS
   (SEND DATA TO DASHBOARD)

TECHNOTSAV

UNIQUE SELLING PROPOSITION

INNOVATION / UNIQUENESS

1. DUAL-DEVICE SYSTEM (KEY IDEA)
   - FLOATING NODE MONITORS WATER QUALITY, WHILE A SECONDARY NODE DETECTS STRUCTURAL ISSUES (LIKE STRUCTURAL FAILURES OR VIBRATIONS)
2. COMBINED DECISION LOGIC
   - WATER DATA + STRUCTURAL CONDITION TOGETHER GIVE A MORE RELIABLE WARNING
3. EARLY DETECTION + TREND MONITORING
   - DETECTS CONTAMINATION EARLY AND TRACKS INCREASE OVER TIME
4. ALERT SYSTEM
   - CLASSIFIES CONDITIONS AS SAFE / WARNING / CRITICAL / DISASTER
5. LOW-COST, DEPLOYABLE SYSTEM
   - SIMPLE HARDWARE, WORKS WITHOUT COMPLEX INFRASTRUCTURE , EASY DEPLOYMENT.

TECHNOTSAV

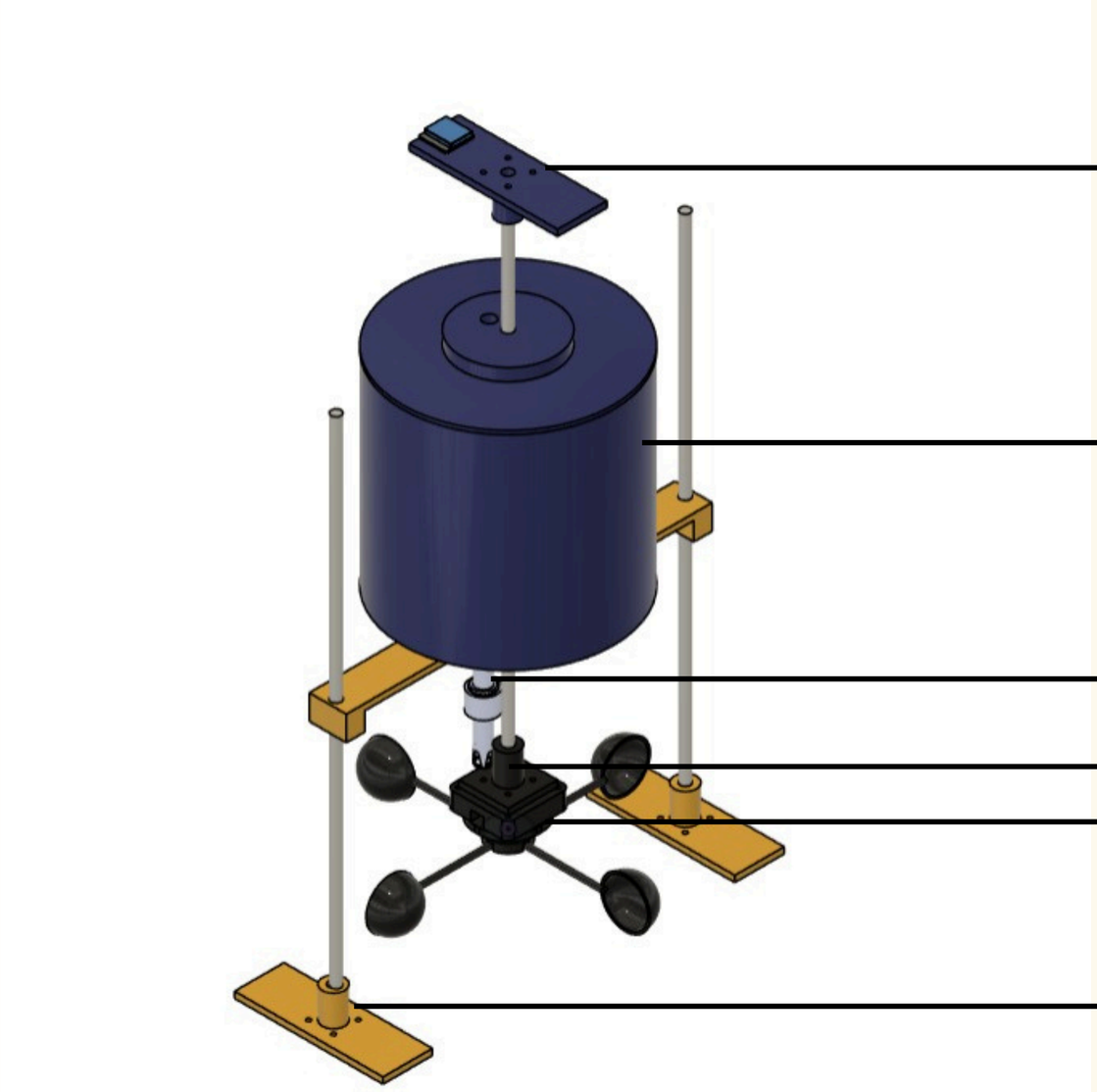

DESIGN OF THE PROPSED FLOATING SYSTEM

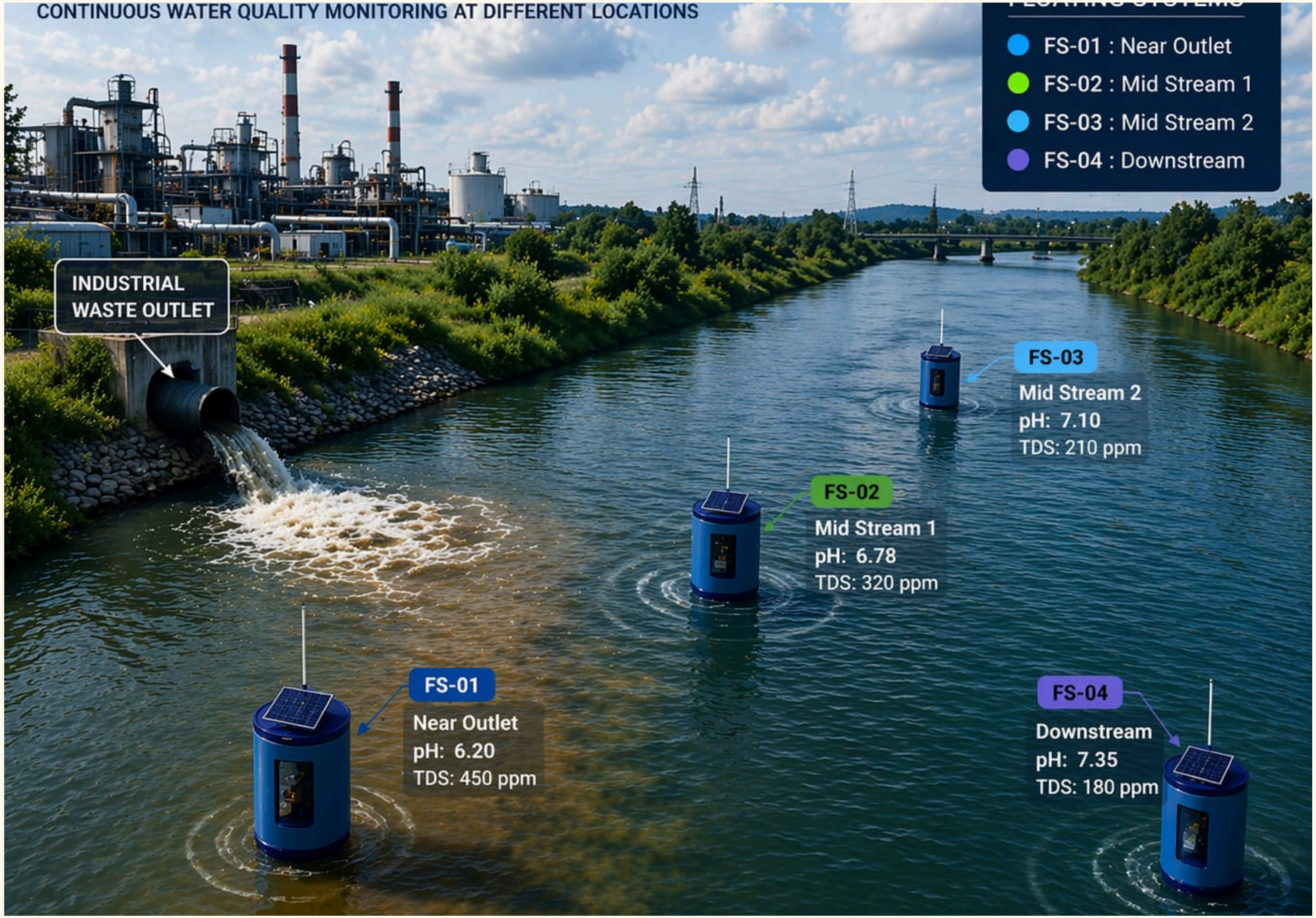

FLOATING SYSTEM OPERATING IN DIFFERENT ZONES

CONCLUSION

WE DEVELOPED A TWO-DEVICE MONITORING SYSTEM CONSISTING OF A FLOATING UNIT THAT MEASURES WATER QUALITY (PH, TDS) AND A SECONDARY UNIT THAT DETECTS STRUCTURAL VIBRATIONS IN NEARBY PIPELINES OR STORAGE. BOTH DEVICES COMMUNICATE AND COMBINE THEIR DATA TO IDENTIFY POSSIBLE LEAKAGE AND CONTAMINATION CONDITIONS IN REAL TIME.

IMPACT

- ENABLES EARLY DETECTION OF WATER POLLUTION
- PROVIDES MORE RELIABLE ALERTS USING BOTH WATER AND STRUCTURAL DATA
- USEFUL FOR INDUSTRIAL AREAS, RIVERS, AND DISCHARGE POINTS
-

FUTURE SCOPE

- ADD MORE SENSORS (TEMPERATURE, GAS, ETC.)
- IMPROVE COMMUNICATION (LONG-RANGE WIRELESS)
- DEPLOY MULTIPLE UNITS FOR WIDER AREA MONITORING

TECHNOTSAV