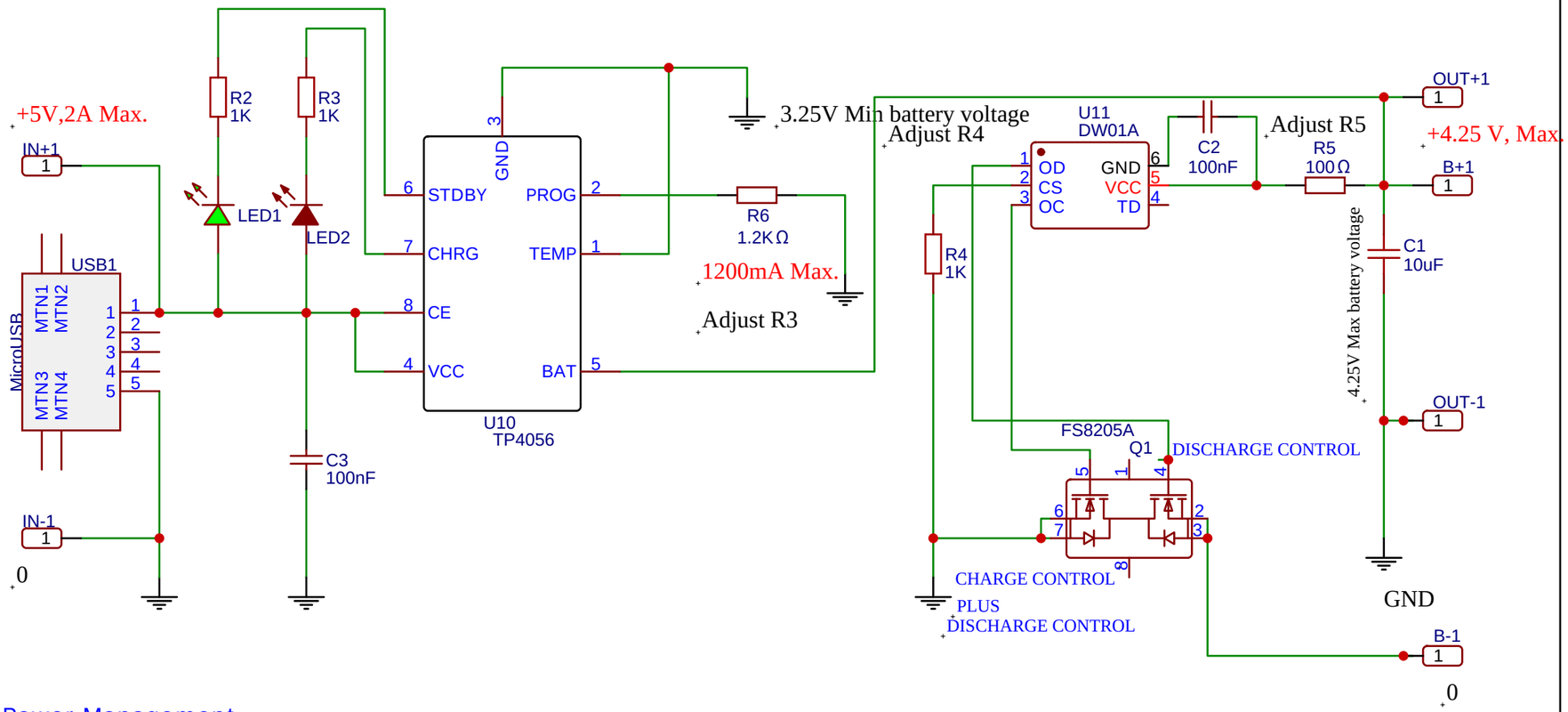

Power Management

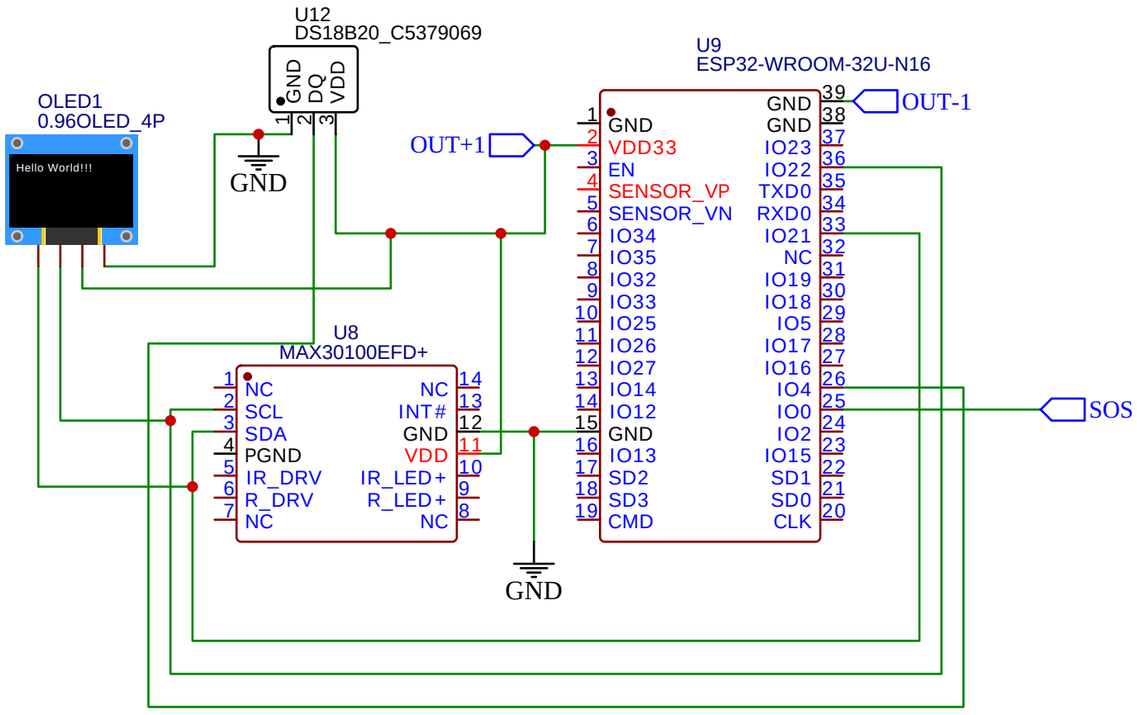

Circuit-band

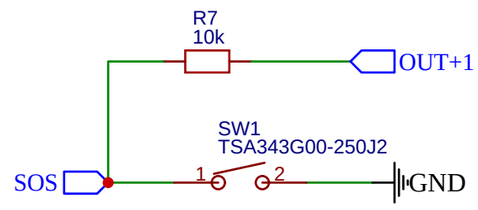

SOS Switch

TITLE: Sheet_2		REV: 1.0
EasyEDA	Company: Your Company	Sheet: 1/1
	Date: 2024-11-09 Drawn By: pratikmore	