Radial Distribution Power Flow

A) Identification of Nodes Beyond Each Branch

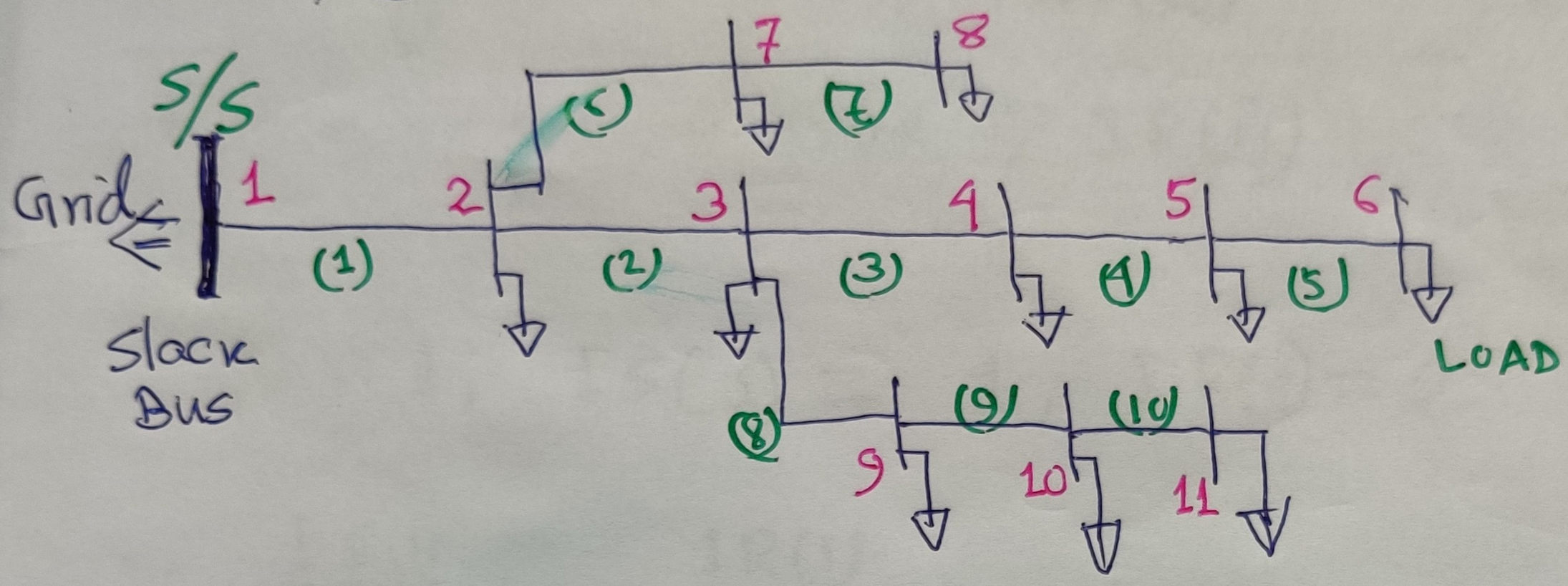

Branch No: (ii)	Sending end node, IS(ii)	Receiving end node IR(ii)
1	1	2
2	2	3
3	3	4
4	4	5
5	5	6
6	2	7
7	7	8
8	3	9
9	9	10
10	10	11

Consider Branch-1

Branch Number $\Rightarrow jj$

Sending end node $\Rightarrow IS(jj)$

Receiving end node $\Rightarrow IR(jj)$

When

$jj = 1, \quad IS(1) = 1, \quad IR(1) = 2$

IS(1)	IR(1)
1	2 ✓
2	3 ✓
2	7 ✓
3	4 ✓
3	9 ✓
7	8 ✓
4	5 ✓
9	10 ✓
5	6 ✓
10	11 ✓

Beyond Branch 1, Total number of nodes = $\boxed{10}$

2, 3, 7, 4, 9, 8, 5, 10, 6, 11

consider Branch – 2

$jj = 2$

$IS(2) = 2$, $IR(2) = 3$

IS(2)	IR(2)
2	3 ✓
3	4 ✓
3	9 ✓
4	5 ✓
9	10 ✓
5	6 ✓
10	11

Beyond Branch 2, Total number of nodes = $\boxed{6}$

3, 4, 9, 5, 10, 6, 11

Consider Branch - 3

$j = 3$, $IS(3) = 3$, $IR(3) = 4$

IS(3)	IR(3)
3	4 ✓
4	5 ✓
5	6 ✓

Beyond Branch 3, Total number of nodes = $\boxed{3}$

4, 5, 6

Consider Branch - 4

$j = 4$, $IS(4) = 4$, $IR(4) = 5$

IS(4)	IR(4)
4	5 ✓
5	6 ✓

Beyond Branch 4, Total number of nodes = $\boxed{2}$

5, 6

Consider Branch - 5

$jj = 5$, $IS(5) = 5$, $IR(5) = 6$

IS(5)	IR(5)
5	6 ✓

~~Total number of nodes~~

Beyond Branch 5, Total number of node = $\boxed{1}$

6

Consider Branch - 6

$jj = 6$, $IS(6) = 2$, $IR(6) = 7$

IS(6)	IR(6)
2	7 ✓
7	8 ✓

Beyond Branch 6, Total number of nodes = $\boxed{2}$

7, 8

Consider Branch-7

$j = 7$, $IS(7) = 7$, $IR(7) = 8$

Beyond Branch 7, Total number of node = $\boxed{1}$

8,

consider Branch-8

$j = 8$, $IS(8) = 3$, $IR(8) = 9$

IS(8)	IR(8)
3	9 ✓
9	10 ✓
10	11 ✓

Beyond Branch 8, Total number of nodes = $\boxed{3}$

9, 10, 11

Consider Branch 9

$jj = 9, \quad IS(9) = 9, \; IR(9) = 10$

IS(9)	IR(9)
9	10 ✓
10	11 ✓

Beyond Branch 9, Total number of nodes = $\boxed{2}$

10, 11

Consider Branch 10

$jj = 10, \quad IS(10) = 10, \quad IR(10) = 11$

IS(10)	IR(10)
10	11 ✓

~~Total~~ Beyond Branch 10, Total number of node = $\boxed{1}$

11

Branch	Other option
1	2, 3, 4, 5, 6, 7, 8, 9, 10, 11
2	3, 4, 5, 6, 9, 10, 11
3	4, 5, 6
4	5, 6
5	6
6	7, 8
7	8
8	9, 10, 11
9	10, 11
10	11

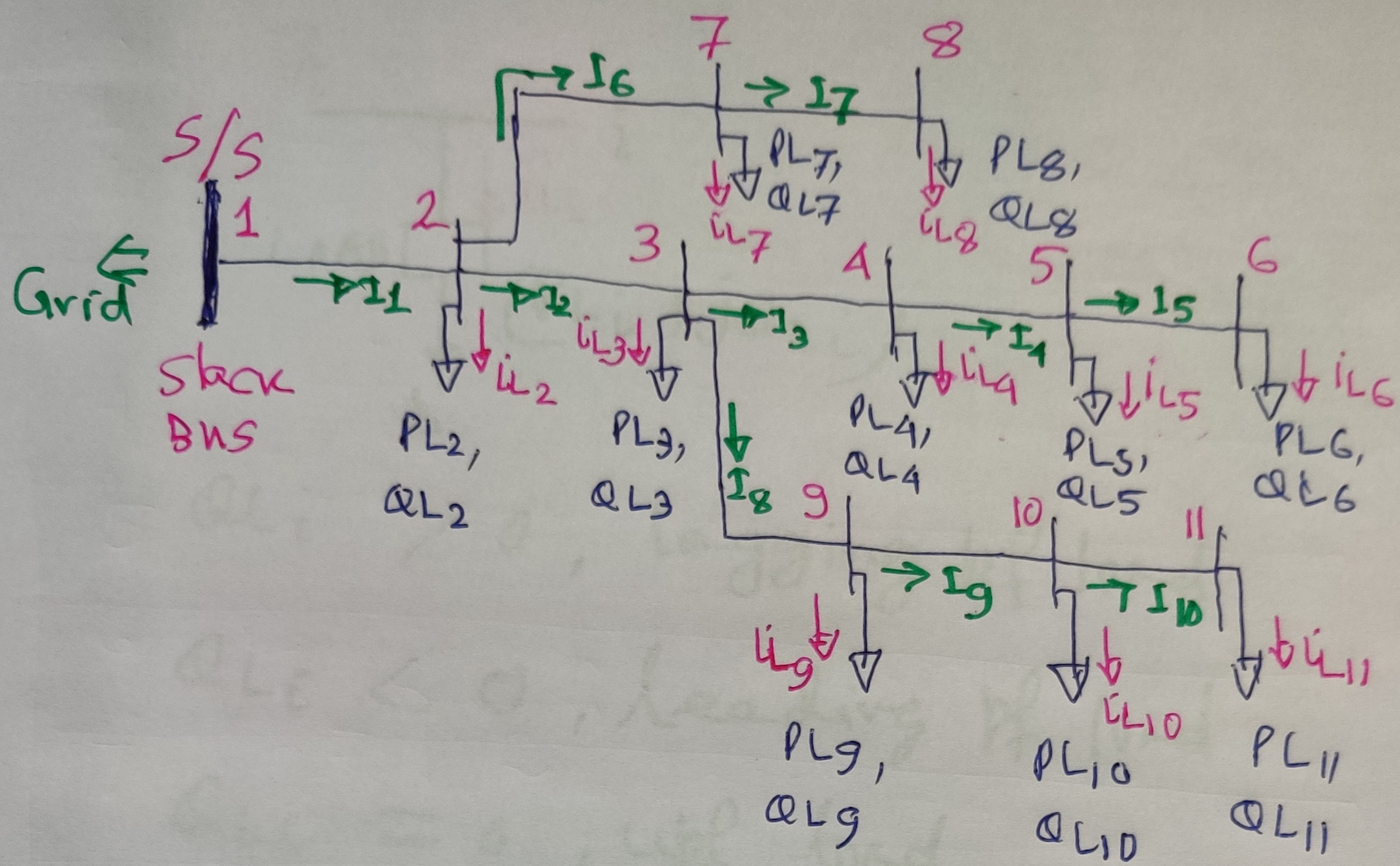

PL ⇒ real power load

QL ⇒ reactive power load

(PL_i, QL_i) real and reactive power load of node i respectively, for $i = 2, 3, \ldots, 11$

i_{L_i} = load current of node i for $i = 2, 3, \ldots, 11$.

$I_1, I_2, \ldots\ldots\ldots, I_{10}$ ⇒ Branch currents

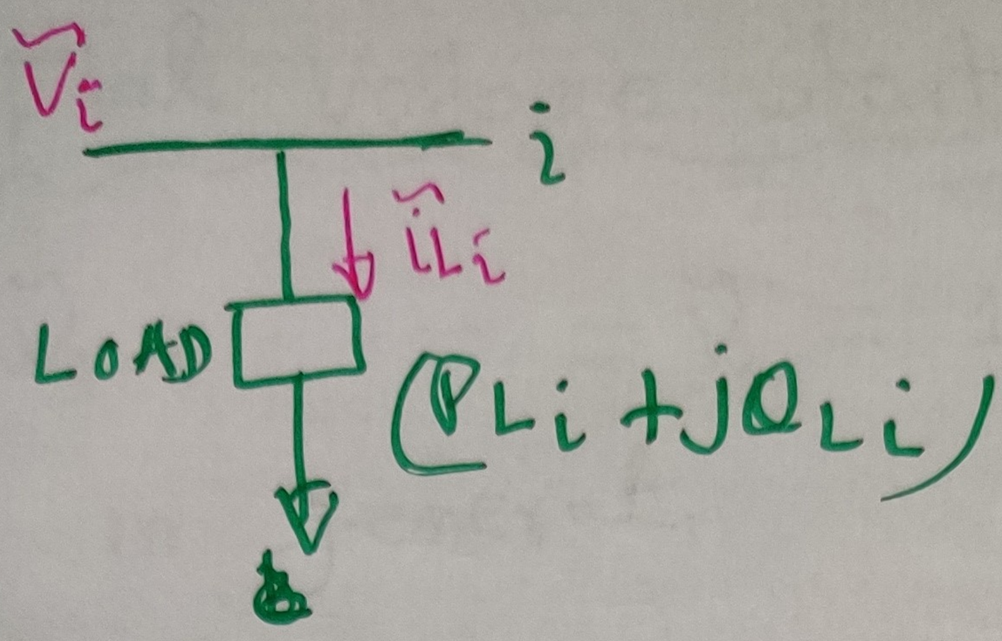

$Q_{Li} > 0$, lagging pf load

$Q_{Li} < 0$, leading pf load

$Q_{Li} = 0$, upf load.

$$P_{Li} - jQ_{Li} = \tilde{V}_i^* \tilde{I}_{Li}$$

$$\therefore \quad \tilde{I}_{Li} = \frac{(P_{Li} - jQ_{Li})}{\tilde{V}_i^*} \quad \text{---} (1)$$

Node 1 is slack bus

$\therefore \quad \tilde{V}_1 = V_1 \angle \delta_1$,

Assume $V_1 = 1.0$ pu, $\delta_1 = 0.0^\circ$

Flat Voltage Start

$$\tilde{V}_2 = \tilde{V}_3 = \cdots = \tilde{V}_{11} = 1\angle 0^\circ = V_1\angle\delta_1$$

or in general,

$$\tilde{V}_i = V_1\angle\delta_1 = 1\angle 0^\circ \text{ pu}$$

for $i = 2, 3, \ldots, 11$ $(NB = 11)$

Real and Reactive power loads at each node is known.
Therefore, initial load current at each node can easily be computed using Eq. (1).

~~After~~ After computing load currents initial branch currents can easily be computed, i.e.,

$$\tilde{I}_1 = \tilde{i}_{L_2} + \tilde{i}_{L_3} + \tilde{i}_{L_4} + \tilde{i}_{L_5} + \tilde{i}_{L_6} + \tilde{i}_{L_7} + \tilde{i}_{L_8} + \tilde{i}_{L_9} + \tilde{i}_{L_{10}} + \tilde{i}_{L_{11}}$$

$$\tilde{I}_2 = \tilde{i}_{L_3} + \tilde{i}_{L_4} + \tilde{i}_{L_5} + \tilde{i}_{L_6} + \tilde{i}_{L_9} + \tilde{i}_{L_{10}} + \tilde{i}_{L_{11}}$$

$$\tilde{I}_3 = \tilde{i}_4 + \tilde{i}_5 + \tilde{i}_6$$

$$\tilde{I}_4 = \tilde{i}_5 + \tilde{i}_6$$

$$\tilde{I}_5 = \tilde{i}_6$$

$$\tilde{I}_6 = \tilde{i}_7 + i_8$$

$$\tilde{I}_7 = \tilde{i}_8$$

$$\tilde{I}_8 = \tilde{i}_9 + \tilde{i}_{10} + \tilde{i}_{11}$$

$$\tilde{I}_9 = \tilde{i}_{10} + \tilde{i}_{11}$$

$$\tilde{I}_{10} = \tilde{i}_{11} \qquad \text{---- (2)}$$

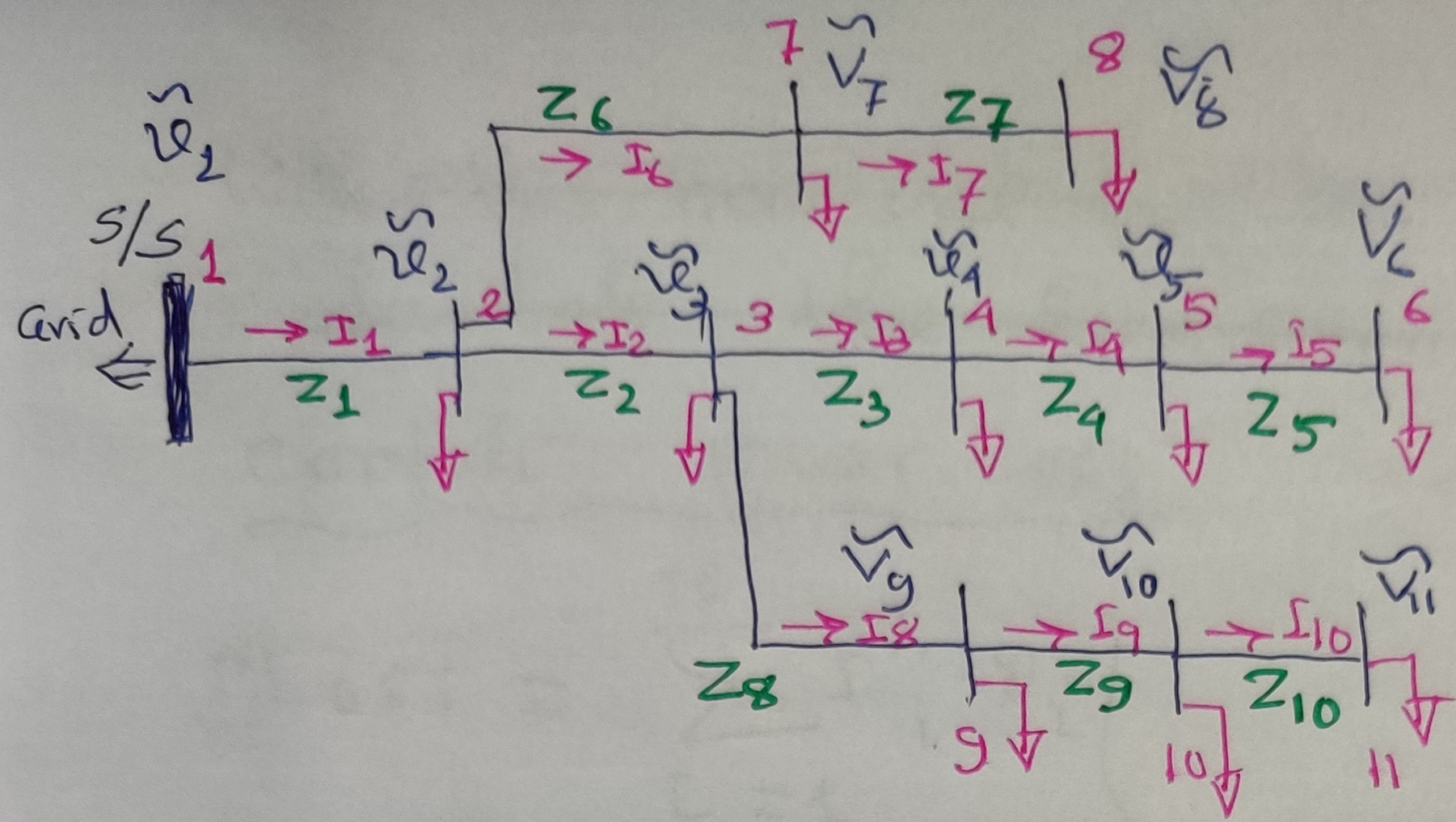

$$\tilde{v}_2 = \tilde{v}_1 - \tilde{I}_1 Z_1$$
$$\tilde{v}_3 = \tilde{v}_2 - \tilde{I}_2 Z_2$$
$$\tilde{v}_4 = \tilde{v}_3 - \tilde{I}_3 Z_3$$
$$\tilde{v}_5 = \tilde{v}_4 - \tilde{I}_4 Z_4$$
$$\tilde{v}_6 = \tilde{v}_5 - \tilde{I}_5 Z_5$$
$$\tilde{v}_7 = \tilde{v}_2 - \tilde{I}_6 Z_6$$
$$\tilde{v}_8 = \tilde{v}_7 - \tilde{I}_7 Z_7$$
$$\tilde{v}_9 = \tilde{v}_3 - \tilde{I}_8 Z_8$$
$$\tilde{v}_{10} = \tilde{v}_9 - \tilde{I}_9 Z_9$$
$$\tilde{v}_{11} = \tilde{v}_{10} - \tilde{I}_{10} Z_{10} \quad \text{--- (3)}$$

~~for m1 = IS~~

for jj = 1, 10

m1 = IS(jj)

m2 = IR(jj)

$\tilde{V}(m_2) = \tilde{V}(m_1) - \tilde{I}(jj) Z(jj)$

end.

~~With this new set of voltages, calculate the load currents~~

compute power loss

$$PLoss = \sum_{i=1}^{10} I_i^2 \cdot r_i$$

$$QLoss = \sum_{i=1}^{10} I_i^2 x_i \quad - (4)$$

$I_i \Rightarrow$ magnitude of current in branch-i

With this new set of voltages, calculate the load currents $\vec{I}_i$ using Eq.(1) for $i = 2, 3, \ldots, 11$. Then compute branch currents using Eqn.(2). Then compute voltages using Eqn.(3).

Then compute Loss using Eqn (4).

<u>Convergence Criteria</u>.

$$\Delta P = \left| PLoss^{(k+1)} - PLoss^{(k)} \right|$$

$$\Delta Q = \left| QLoss^{(k+1)} - QLoss^{(k)} \right|$$

If $\{(\Delta P \,\&\, \Delta Q) < \epsilon\}$ solution has converged.

Total Load Fed Through a Node

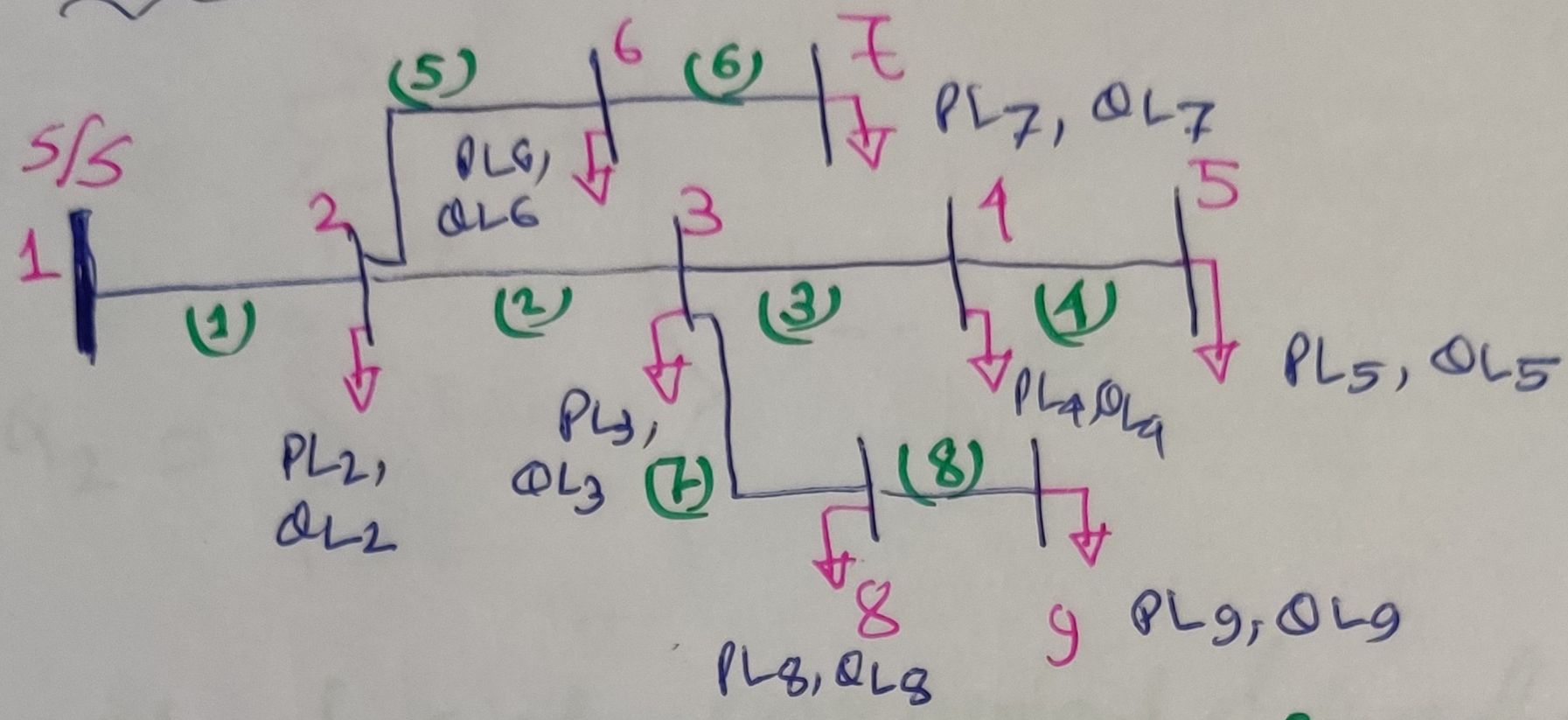

Electrical Equivalent of Branch-1

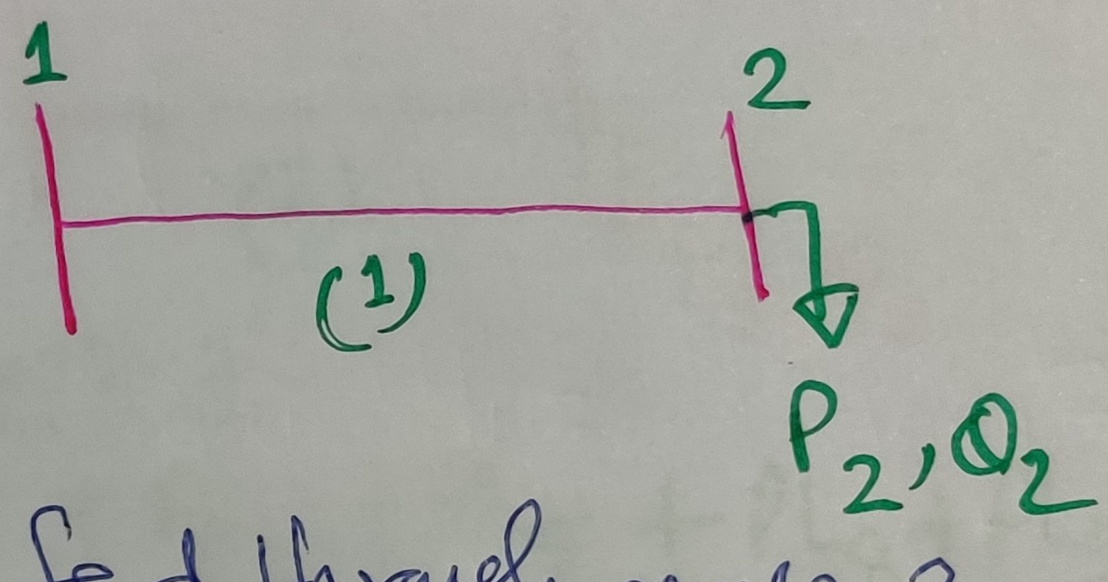

Total load fed through node 2

$$P_2 = (PL_2 + PL_3 + PL_4 + PL_5 + PL_6 + PL_7 + PL_8 + PL_9) + (PLoss_2 + PLoss_3 + PLoss_4 + PLoss_5 + PLoss_6 + PLoss_7 + PLoss_8)$$

$$Q_2 = (QL_2 + QL_3 + QL_4 + QL_5 + QL_6 + QL_7 + QL_8 + QL_9) + (QLoss_2 + QLoss_3 + QLoss_4 + QLoss_5 + QLoss_6 + QLoss_7 + QLoss_8)$$

If loss is neglected

$$\left.\begin{aligned} P_2 &= \sum_{i=2}^{9} PL_i \\ Q_2 &= \sum_{i=2}^{9} QL_i \end{aligned}\right\} \quad \text{-- (5)}$$

Page - 17

Electrical Equivalent of Branch-2

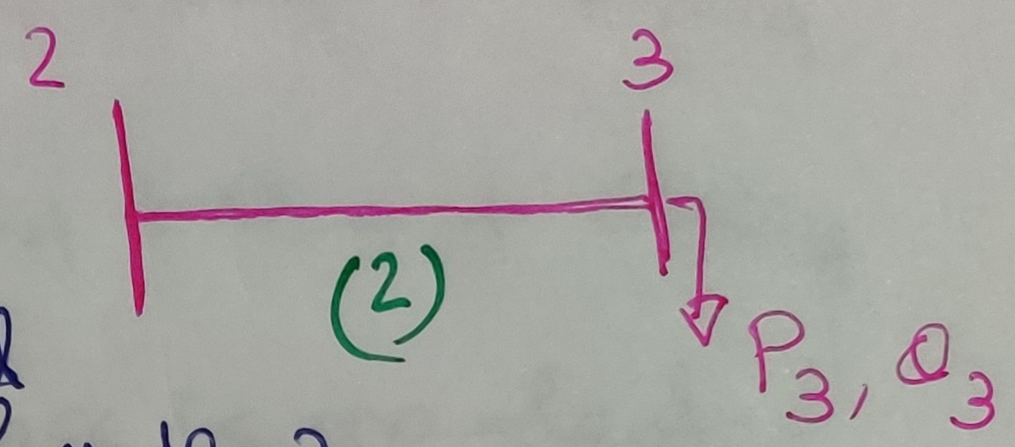

Total load fed through node-3

$$P_3 = (PL_3 + PL_4 + PL_5 + PL_8 + PL_9) + (Ploss_3 + Ploss_4 + Ploss_7 + Ploss_8)$$

$$Q_3 = (QL_3 + QL_4 + QL_5 + QL_8 + QL_9) + (Qloss_3 + Qloss_4 + Qloss_7 + Qloss_8)$$

If loss is neglected.

$$\left.\begin{aligned} P_3 &= PL_3 + PL_4 + PL_5 + PL_8 + PL_9 \\ Q_3 &= QL_3 + QL_4 + QL_5 + QL_8 + QL_9 \end{aligned}\right\} \quad \text{-- (6)}$$

Electrical Equivalent of Branch-3

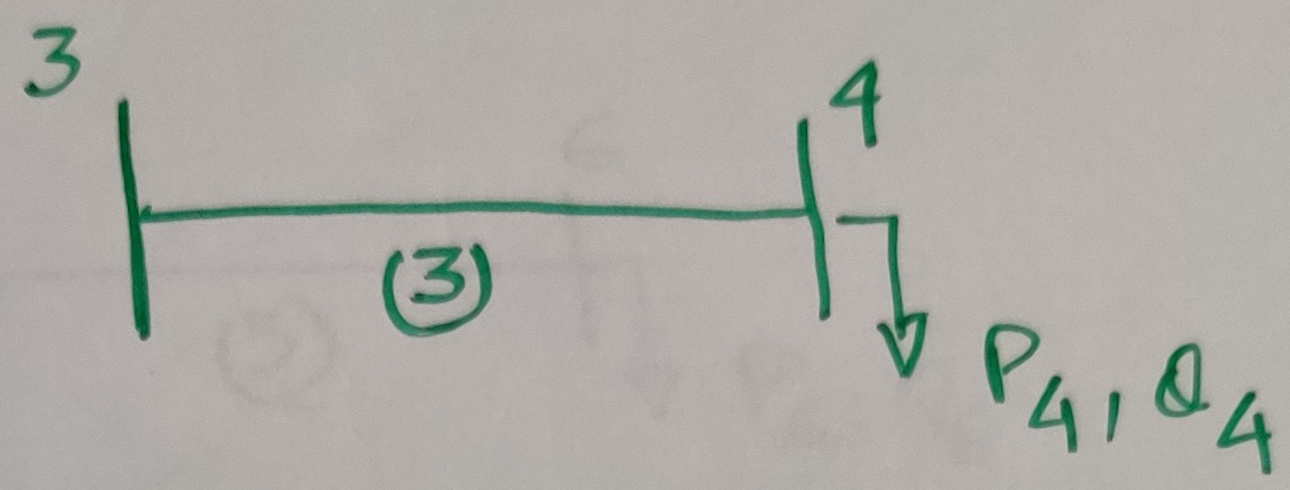

Total load fed through node 4

$$P_4 = PL_4 + PL_5 + Ploss_4$$

$$Q_4 = QL_4 + QL_5 + Qloss_4$$

If Loss is neglected.

$$\left.\begin{aligned} P_4 &= PL_4 + PL_5 \\ Q_4 &= QL_4 + QL_5 \end{aligned}\right\} \quad \text{--- (7)}$$

Electrical Equivalent of Branch-4

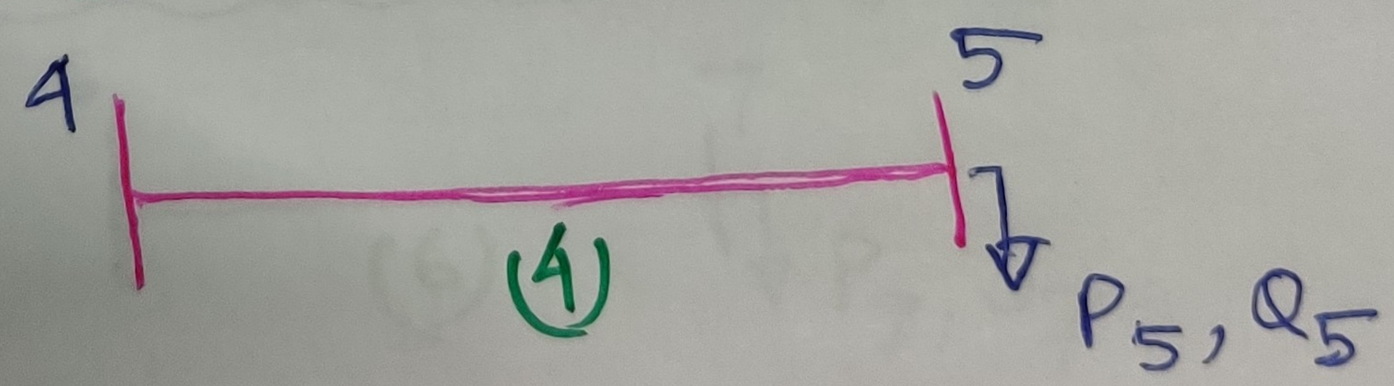

Total load fed through node 5

$$\left.\begin{aligned} P_5 &= PL_5 \\ Q_5 &= QL_5 \end{aligned}\right\} \quad \text{--- (8)}$$

Electrical Equivalent of Branch-5

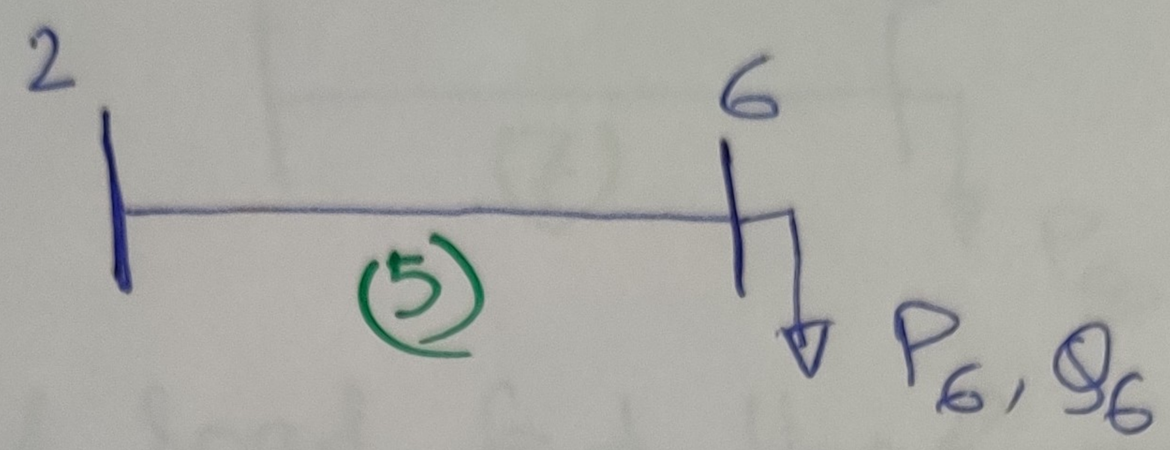

Total load fed through node-6

$$P_6 = PL_6 + PL_7 + Ploss_6$$

$$Q_6 = QL_6 + QL_7 + Qloss_6$$

If loss is neglected

$$\left.\begin{aligned} P_6 &= PL_6 + PL_7 \\ Q_6 &= QL_6 + QL_7 \end{aligned}\right\} \quad \cdots (9)$$

Electrical Equivalent of Branch-6

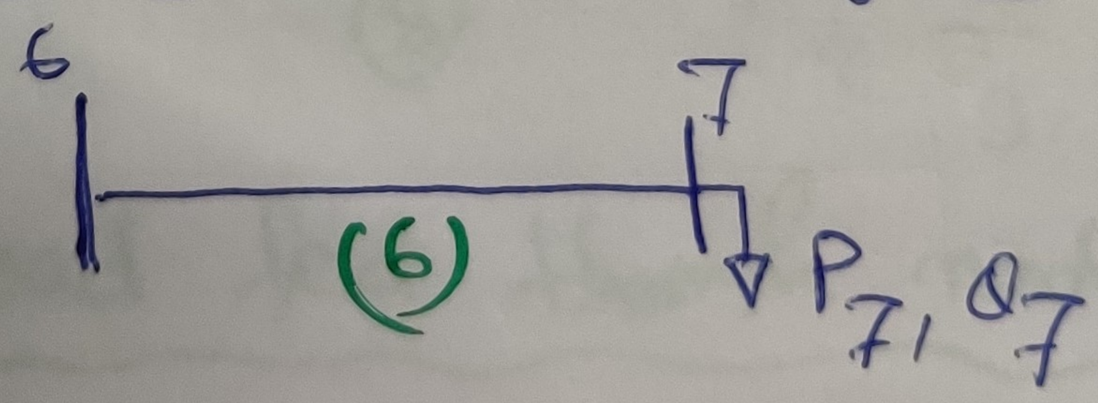

Total load fed through node 7

$$\left.\begin{aligned} P_7 &= PL_7 \\ Q_7 &= QL_7 \end{aligned}\right\} \quad \cdots (10)$$

Electrical Equivalent of Branch-7

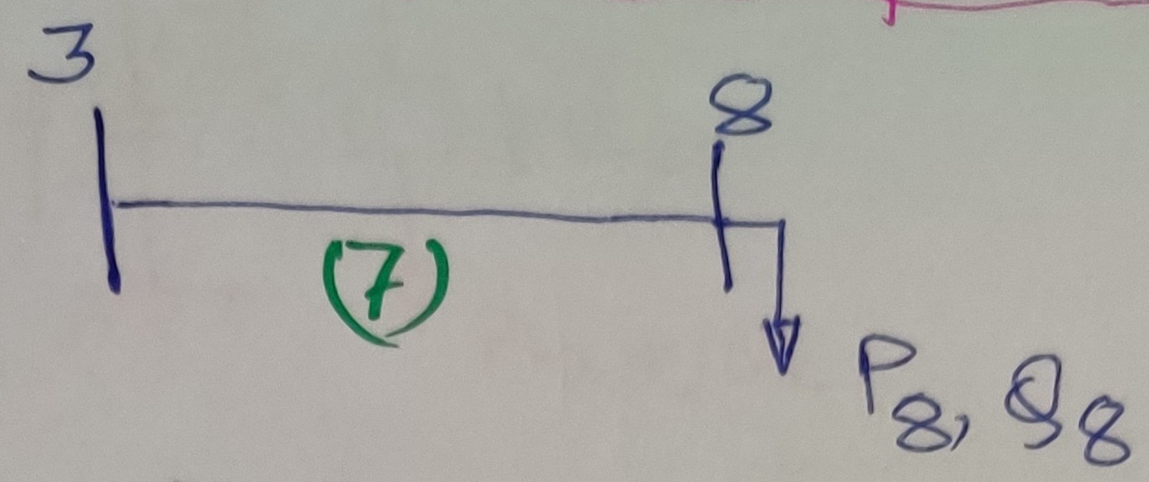

Total load fed through node 8

$$P_8 = PL_8 + PL_9 + Ploss_8$$

$$Q_8 = QL_8 + QL_9 + Qloss_9$$

If loss is neglected:

$$\left.\begin{aligned} P_8 &= PL_8 + PL_9 \\ Q_8 &= QL_8 + QL_9 \end{aligned}\right\} \quad \text{---} (11)$$

Electrical Equivalent of Branch-8

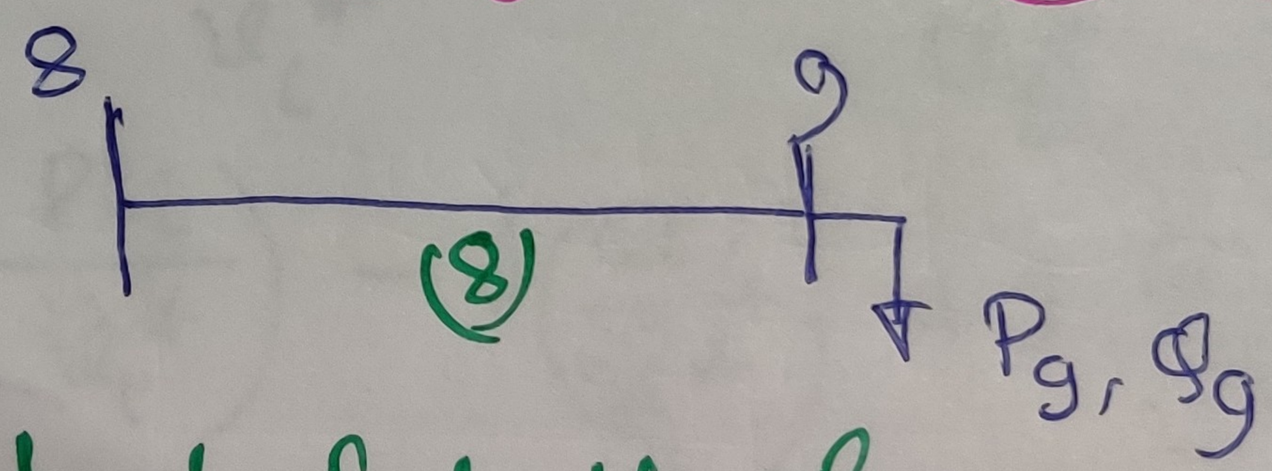

Total load fed through node 9

$$\left.\begin{aligned} P_9 &= PL_9 \\ Q_9 &= QL_9 \end{aligned}\right\} \quad \text{---} (12)$$

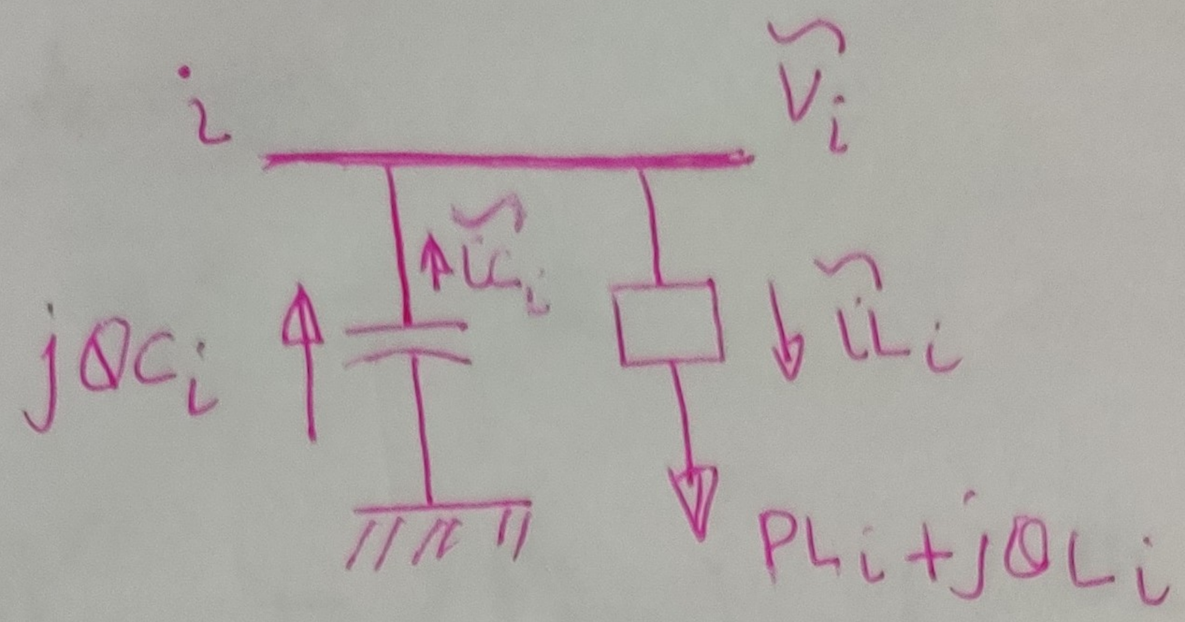

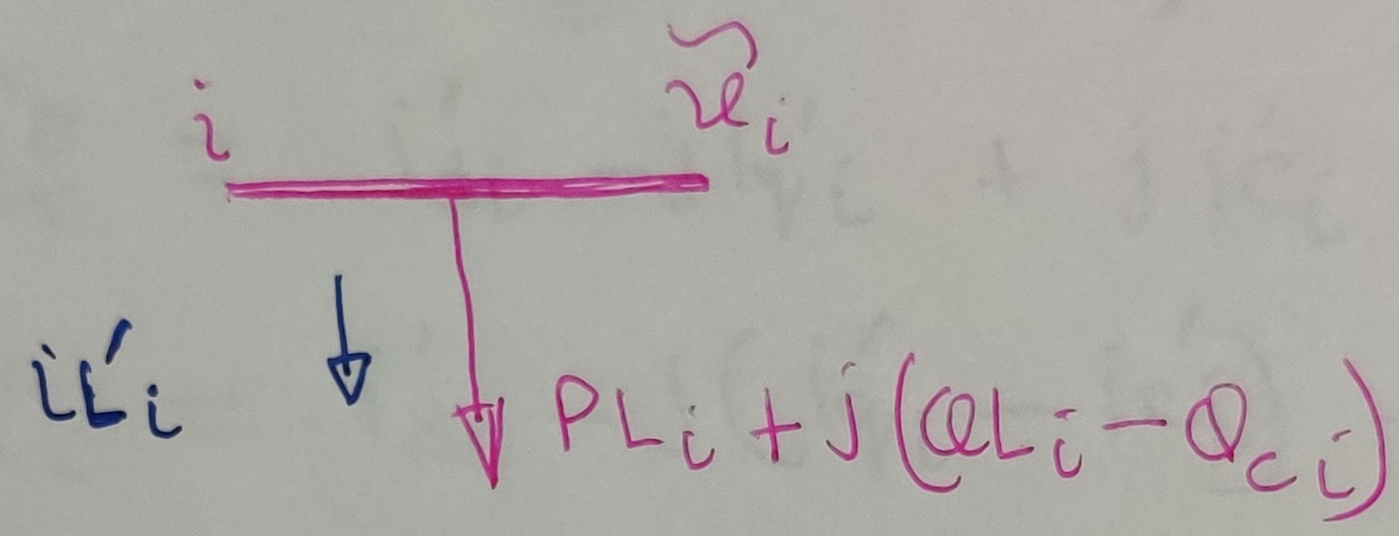

$$P_{L_i} - j(Q_{L_i} - Q_{C_i}) = \tilde{v}_i^* \, \tilde{i}'_{L_i}$$

$$\therefore \tilde{i}'_{L_i} = \frac{P_{L_i} - j(Q_{L_i} - Q_{C_i})}{\tilde{v}_i^*}$$

$$\therefore \tilde{i}'_{L_i} = \frac{P_{L_i} - jQ_{L_i}}{\tilde{v}_i^*} + j\frac{Q_{C_i}}{\tilde{v}_i^*} \quad \text{---- (13)}$$

$$\therefore \tilde{i}'_{L_i} = \left(\frac{P_{L_i}}{\tilde{v}_i^*}\right) - j\left(\frac{Q_{L_i}}{\tilde{v}_i^*}\right) + j\frac{Q_{C_i}}{\tilde{v}_i^*}$$

$\therefore$ ~~$\tilde{i}'_{L_i} \Rightarrow$~~

In distribution system, voltage angle is ~~very~~ very small.

Assume,

$$\tilde{v}_i^* = v_i$$

$$\therefore \tilde{i}_{L_i}'' = \left(\frac{P_{L_i}}{v_i}\right) - j\left(\frac{Q_{L_i}}{v_i}\right) + j\frac{Q_{C_i}}{v_i}$$

$$\therefore \tilde{i}_{L_i}'' = i_{d_i}' - j i_{q_i}' + j i_{C_i}'$$

$$\therefore \tilde{i}_{L_i}'' = i_{d_i}' - j(i_{q_i}' - i_{C_i}') \quad \text{---} (14)$$

Without Assumption

From Eqn. (13)

$$\tilde{i}_{L_i}' = i_{d_i} - j i_{q_i} + j i_{C_i}$$

$$\therefore \tilde{i}_{L_i}' = i_{d_i} - j(i_{q_i} - i_{C_i}) \quad \text{---} (15)$$

$$\tilde{i}_{L_i}'' \simeq \tilde{i}_{L_i}'$$

$$i_{d_i} \simeq i_{d_i}', \quad i_{q_i} \simeq i_{q_i}', \quad i_{C_i} \simeq i_{C_i}'$$

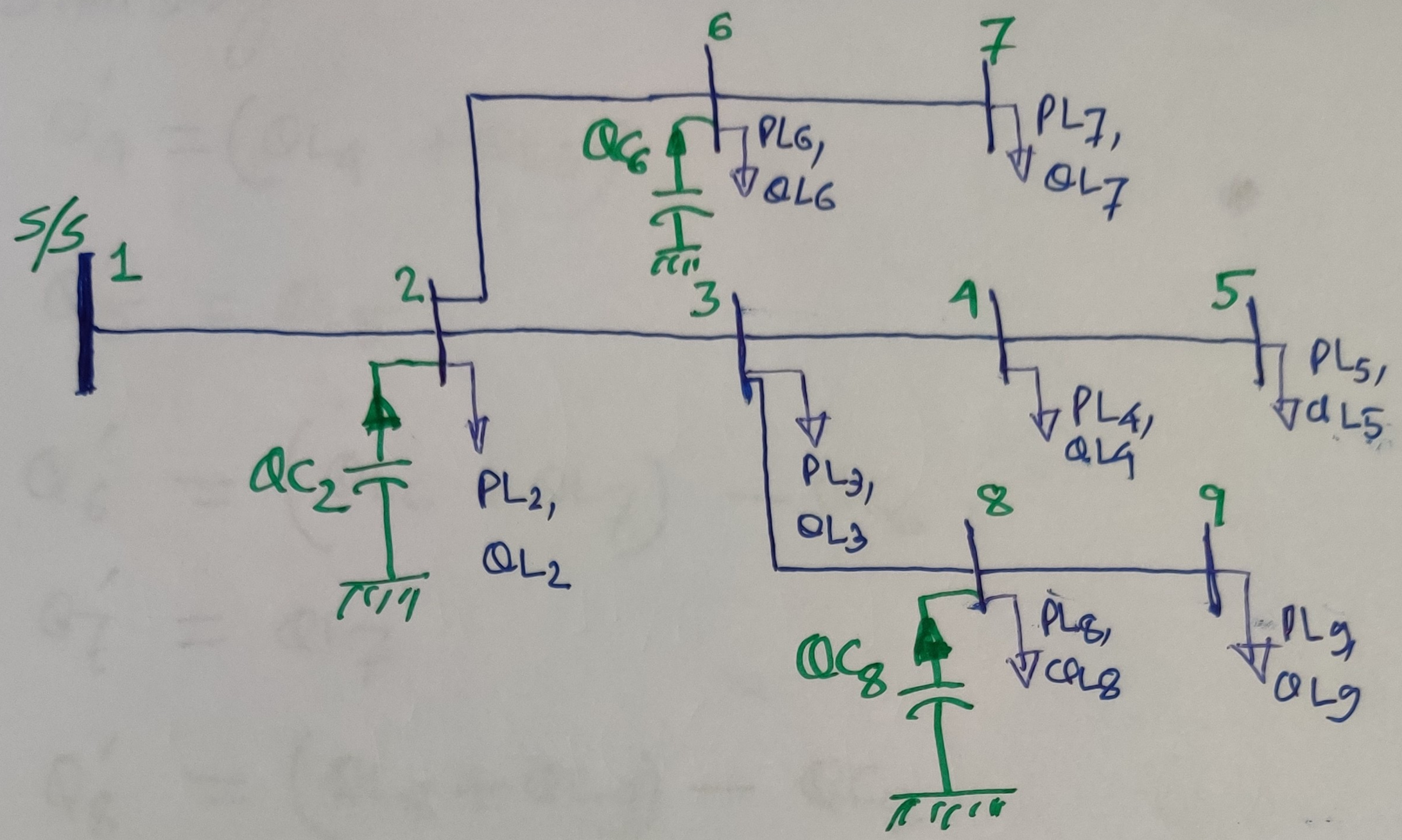

Total real power load fed through any node will remain same as before

<u>Total reactive power load fed through node 2,</u>

$$Q_2' = \left(\sum_{i=2}^{9} QL_i\right) - Q_{C_2} - QC_6 - QC_8$$

Total reactive power load fed through node 3,

$$Q_3' = \left(QL_3 + QL_4 + QL_5 + QL_8 + QL_9\right) - QC_8$$

Similarly

$$Q_4' = (Q_{L4} + Q_{L5})$$

$$Q_5' = Q_{L5}$$

$$Q_6' = (Q_{L6} + Q_{L7}) - Q_{C6}$$

$$Q_7' = Q_{L7}$$

$$Q_8' = (Q_{L8} + Q_{L9}) - Q_{C8}$$

$$Q_9' = Q_{L9}$$

Electrical Equivalent of Branch-1

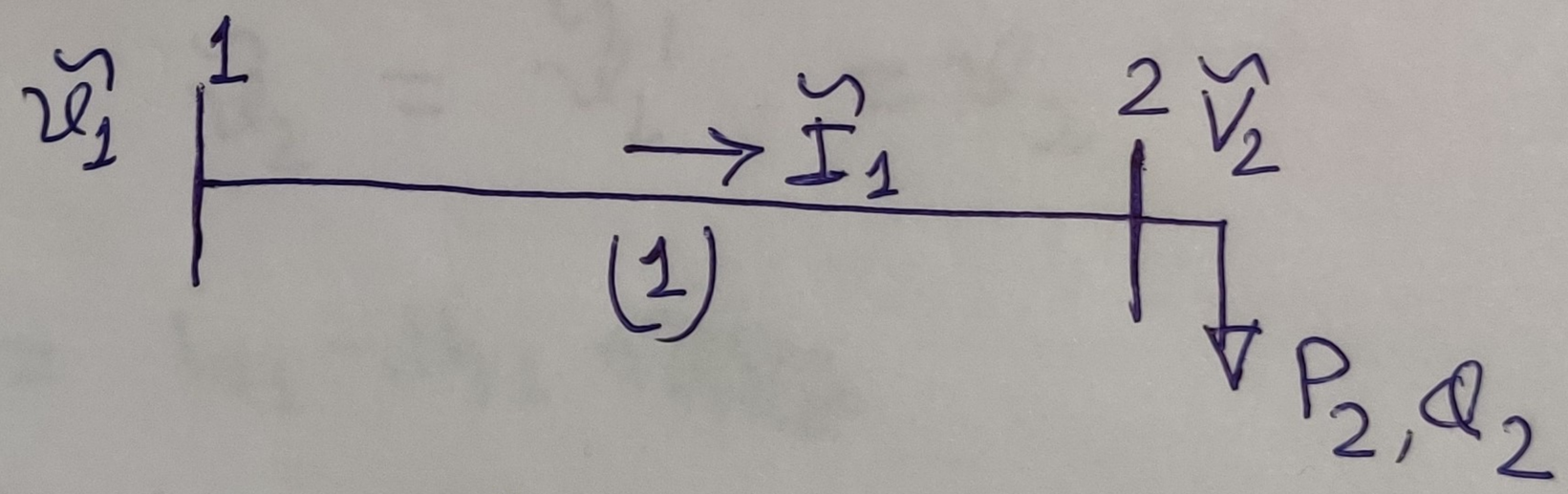

$$\tilde{I}_1 = \left(\frac{P_2 - jQ_2}{\tilde{V}_2^*}\right)$$

$$\therefore \tilde{I}_1 = \frac{\left(\sum_{i=2}^{9} P_{Li} - j\sum_{i=2}^{9} Q_{Li}\right)}{\tilde{V}_2^*}$$

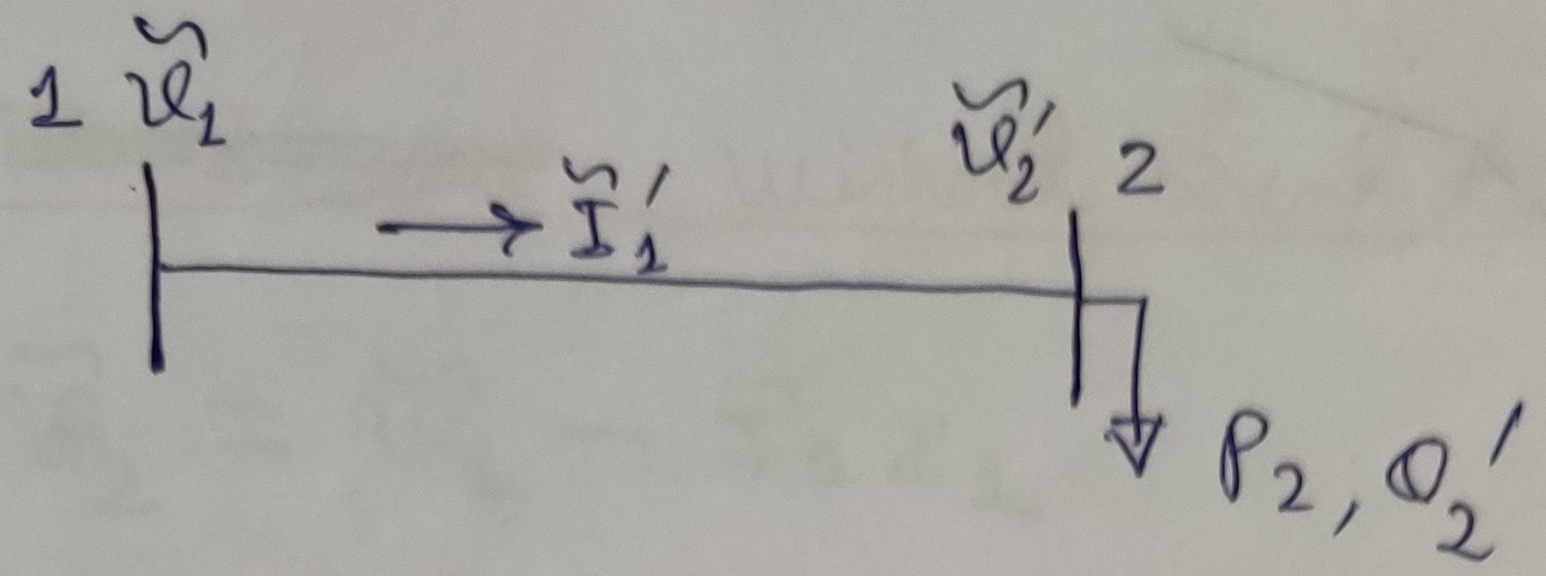

$$\tilde{I}_1' = \frac{P_2 - jQ_2'}{(\tilde{v}_2')^*}$$

$$\therefore \tilde{I}_1' = \frac{\sum_{i=2}^{9} P_{Li} - j\sum_{i=2}^{9} Q_{Li} + j\left(Q_{C_2} + Q_{C_6} + Q_{C_8}\right)}{(\tilde{v}_2')^*}$$

$$= \underline{i_{d_1}' - j i_{q_1}' + j i_{c_1}'}$$

Assume

$$\tilde{v}_2 = \tilde{v}_2' = v_2$$

$$\therefore \tilde{I}_1 = i_{d_1} - j i_{q_1}$$

$$\tilde{I}_1' = i_{d_1} - j i_{q_1} + j i_{c_1}$$

$$\therefore \tilde{I}_1' = i_{d_1} - j(i_{q_1} - i_{c_1})$$