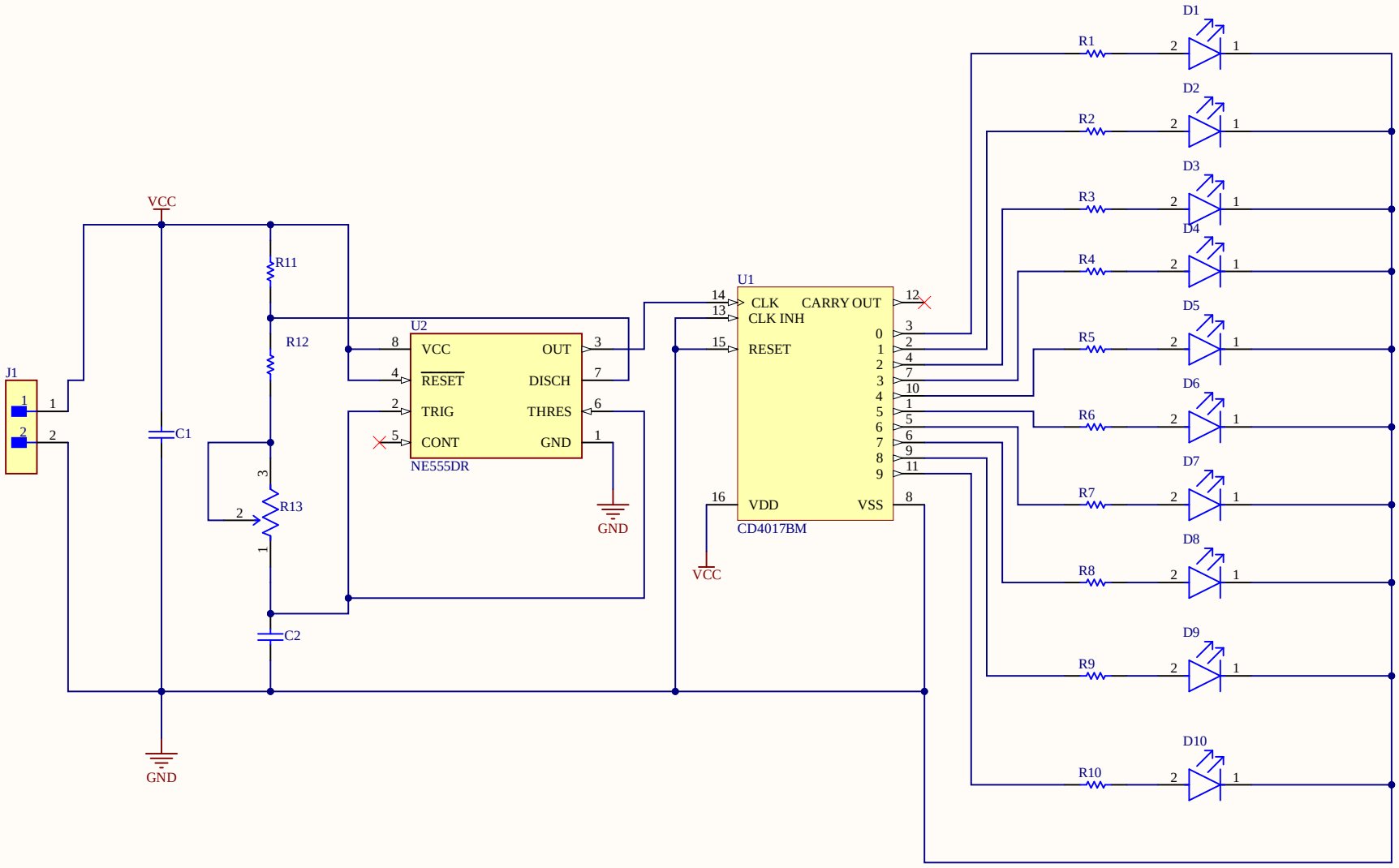

Title		
Size A4	Number	Revision
Date: 8-03-2024		Sheet of
File: C:\Users\..\LEDSEQUENCER.SchDoc		Drawn By: