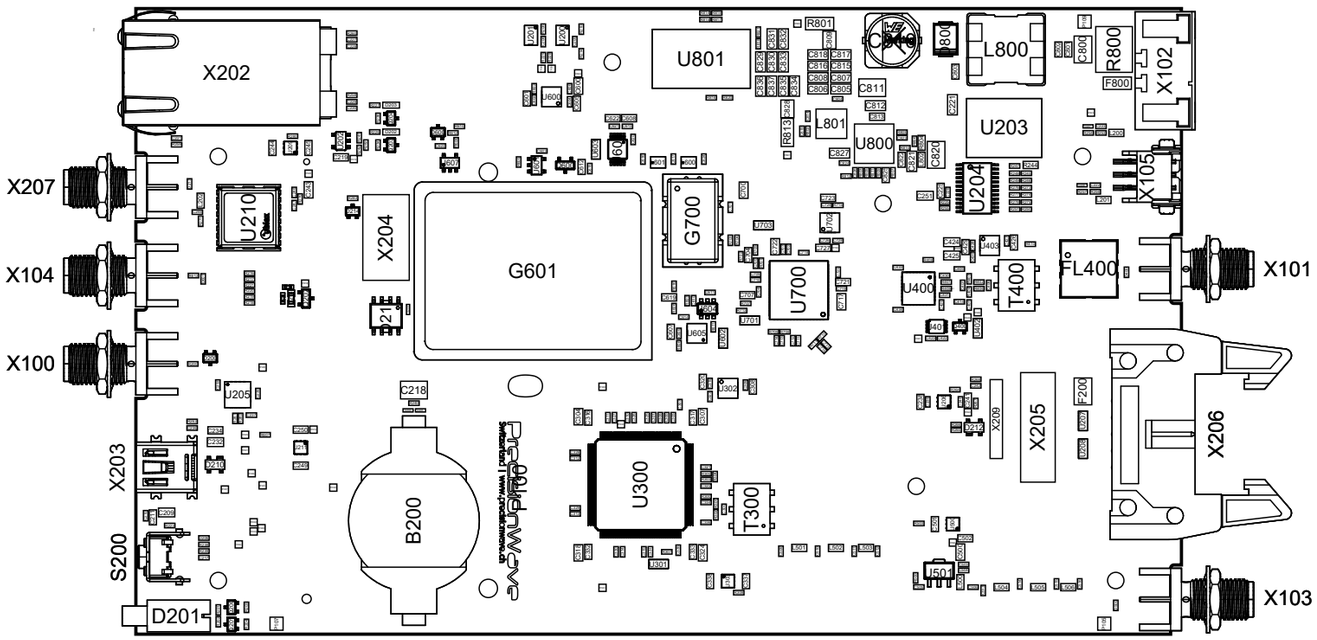
X202
X207
X104
X100
X203
S200
D201
U210
X204
G601
B200
U205
C218
U300
T300
G700
U801
R801
L801
U800
C811
C812
L800
R800
X102
U203
U204
X105
U700
U400
T400
FL400
X101
X205
X206
X103
P104

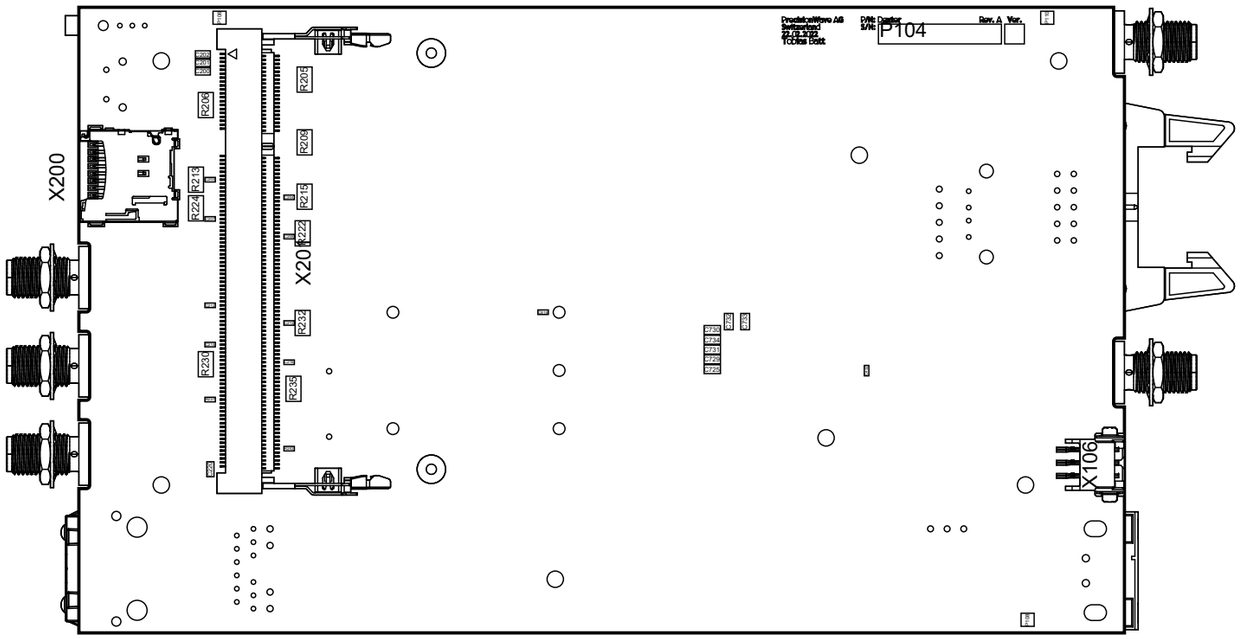
X200
X201
X106
P104