K. Premaja
240102234

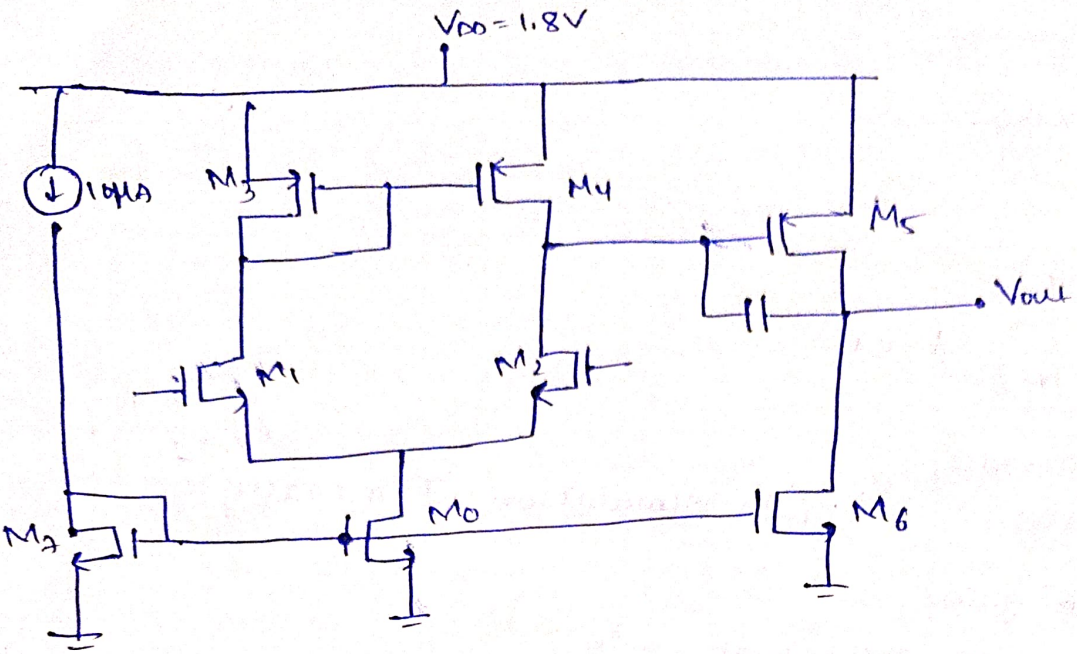

$I_{ref} = 1\mu A$ so that $I_{tail} = 10\mu A$

$V_{ov} = 0.2V$

$\mu_n C_{ox} = 230\mu A/V^2$ $\mu_p C_{ox} = 100\mu A/V^2$

$I_7 = \frac{1}{2}\left(\frac{W}{L}\right)_7 \mu_n C_{ox} (V_{ov})^2$

$10 = \frac{1}{2} \times 230 \times 0.2^2 \times \left(\frac{W}{L}\right)_7$

$\boxed{\left(\frac{W}{L}\right)_7 = 2.17}$ → for M_7

$\left(\frac{W}{L}\right)_0 = 10\left(\frac{W}{L}\right)_7 = 21.7$

$\left(\frac{W}{L}\right)_1 = \left(\frac{W}{L}\right)_2 = \frac{2 \times I_{tail}}{2(\mu_n C_{ox})(V_{ov})^2} = \frac{1}{2}\left(\frac{W}{L}\right)_{tail/0}$

$= 10.85$

$I_3 = I_4 = 5\mu A$

$\left(\frac{W}{L}\right)_3 = \frac{5 \times 10^{-6} \times 2}{100 \times 10^{-6} \times 0.2)^2} = 2.5 = \left(\frac{W}{L}\right)_4$

$g_m = \mu_n C_{ox}\left(\frac{W}{L}\right) V_{ov}$

$g_{m2} = 230 \times 10^{-6} \times 10.85 \times 0.2$

$= 0.5 \times 10^{-3}$

$g_{m4} = 100 \times 10^{-6} \times \left(\frac{W}{L}\right)_4 \times 0.2$

$= 100 \times 10^{-6} \times 2.5 \times 0.2$

$= 5 \times 10^{-5}$

gain $= g_{m2}(r_{on} \| r_{op})$

$= 0.5 \times 10^{-3} \left(\frac{1}{2 \lambda I_D}\right) \quad \lambda = 0.1$

$= \frac{2.5 \times 10^{-3}}{5 \times 10^{-6}} = 0.5 \times 10^{3}$

$= 500$

[On simulation I actually got

This gives 53.9 dB gain

Using 2nd stage we can cross 60dB gain

$A_{net} = A_1 A_2$

$A_2 = 2$

$I_6 = 10 \mu A$

$\left(\frac{W}{L}\right)_6 = \left(\frac{W}{L}\right)_0 = 21.7$

$I_6 = I_5 \Rightarrow \left(\frac{W}{L}\right)_5 = \frac{2 I_5}{\mu_p C_{ox} (V_{ov})^2}$

$= \frac{2 \times 10 \times 10^{-6}}{230 \times 10^{-6} \times (0.2)^2}$

$= 2.17$