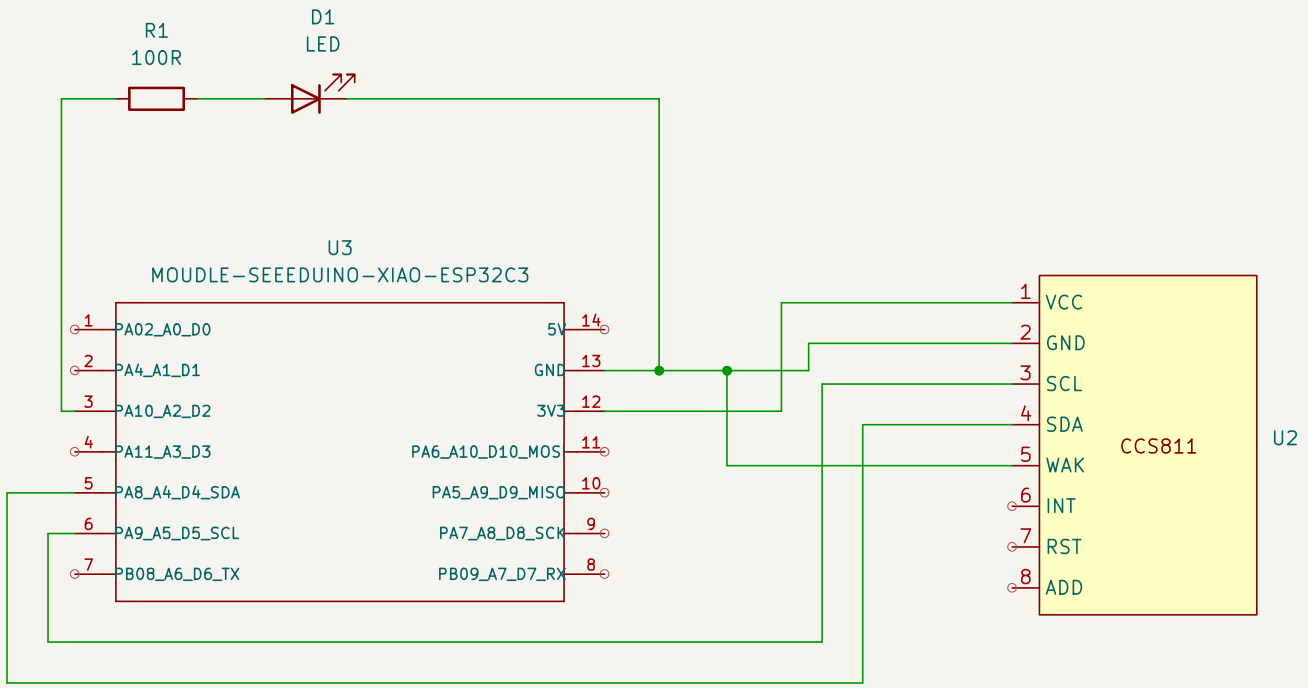

A custom PCB design for a ESP-32 based smart home sensor.

James Price

Sheet: /

File: diy_tvoc_sensor.kicad_sch

Title: TVOC & eCO2 Sesnor

Size: A5	Date: 2025-01-19	**Rev: 1**
KiCad E.D.A. 8.0.6		Id: 1/1