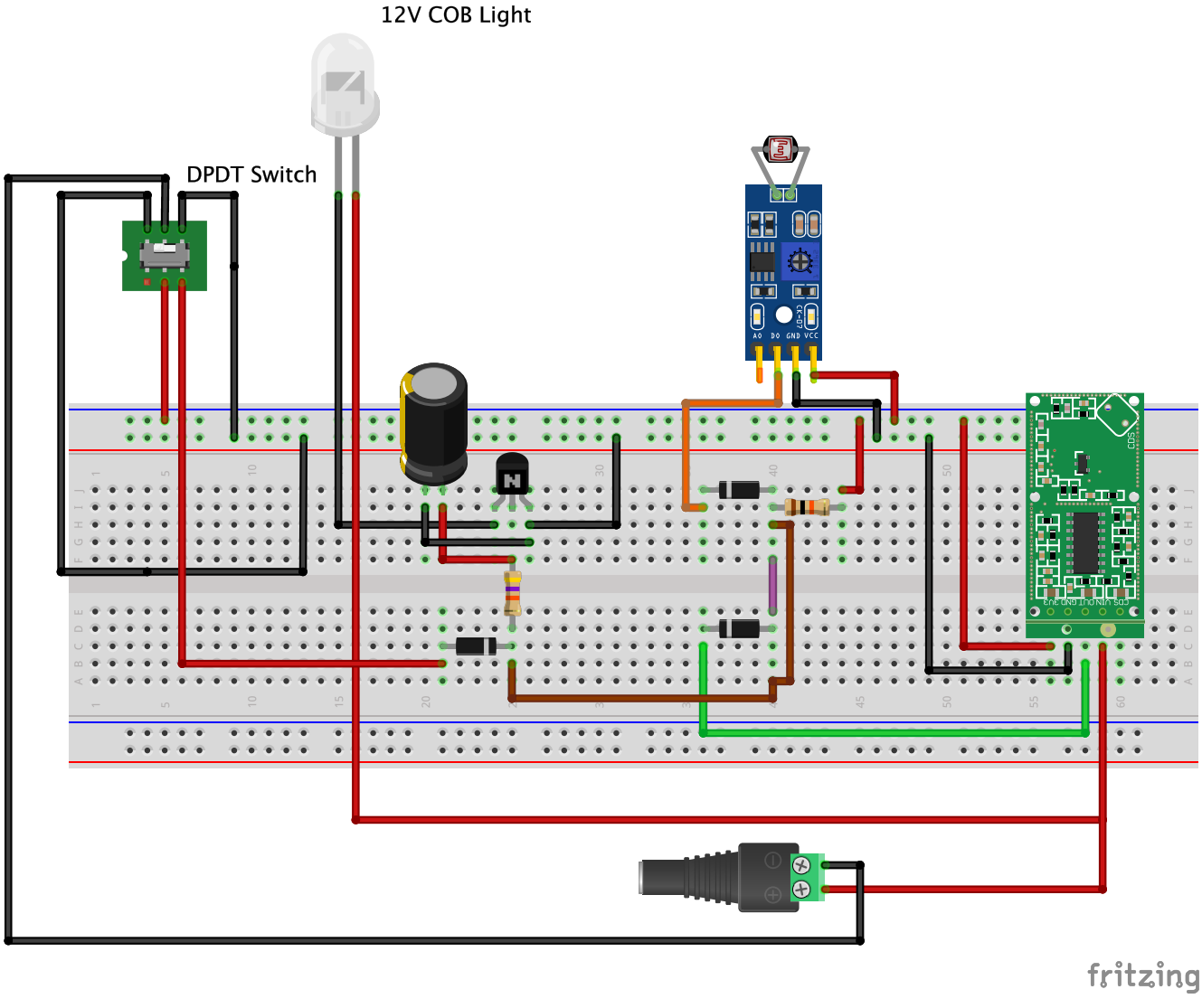
12V COB Light
DPDT Switch
A0 D0 GND VCC
ENC GND TXD RXD SDA
fritzing