SGS-THOMSON MICROELECTRONICS

L293D
L293DD

PUSH-PULL FOUR CHANNEL DRIVER WITH DIODES

- 600mA OUTPUT CURRENT CAPABILITY PER CHANNEL
- 1.2A PEAK OUTPUT CURRENT (non repetitive) PER CHANNEL
- ENABLE FACILITY
- OVERTEMPERATURE PROTECTION
- LOGICAL "0" INPUT VOLTAGE UP TO 1.5 V (HIGH NOISE IMMUNITY)
- INTERNAL CLAMP DIODES

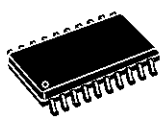

SO(12+4+4)

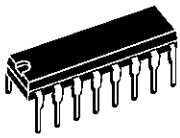

Powerdip (12+2+2)

ORDERING NUMBERS:

L293DD L293D

DESCRIPTION

The Device is a monolithic integrated high voltage, high current four channel driver designed to accept standard DTL or TTL logic levels and drive inductive loads (such as relays solenoides, DC and stepping motors) and switching power transistors.

To simplify use as two bridges each pair of channels is equipped with an enable input. A separate supply input is provided for the logic, allowing operation at a lower voltage and internal clamp diodes are included.

This device is suitable for use in switching applications at frequencies up to 5 kHz.

The L293D is assembled in a 16 lead plastic packaage which has 4 center pins connected together and used for heatsinking

The L293DD is assembled in a 20 lead surface mount which has 8 center pins connected together and used for heatsinking.

BLOCK DIAGRAM

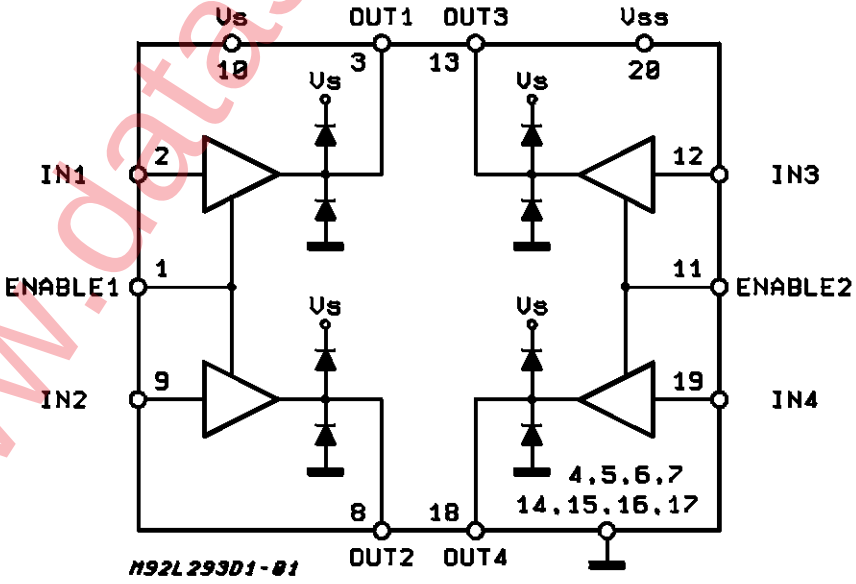

www.datasheet.live

ABSOLUTE MAXIMUM RATINGS

Symbol	Parameter	Value	Unit
V_S	Supply Voltage	36	V
V_{SS}	Logic Supply Voltage	36	V
V_i	Input Voltage	7	V
V_{en}	Enable Voltage	7	V
I_o	Peak Output Current (100 µs non repetitive)	1.2	A
P_{tot}	Total Power Dissipation at T_{pins} = 90 °C	4	W
T_{stg}, T_j	Storage and Junction Temperature	– 40 to 150	°C

PIN CONNECTIONS (Top view)

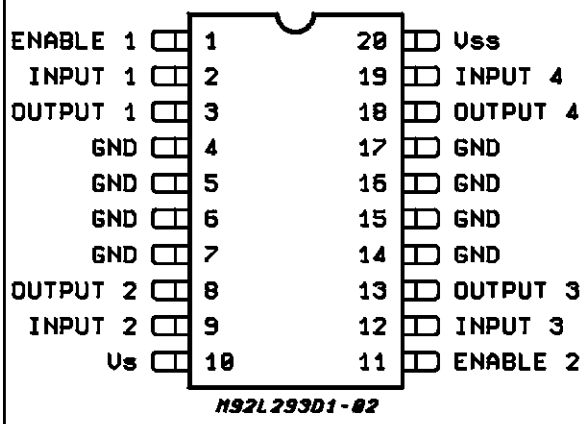

SO(12+4+4)

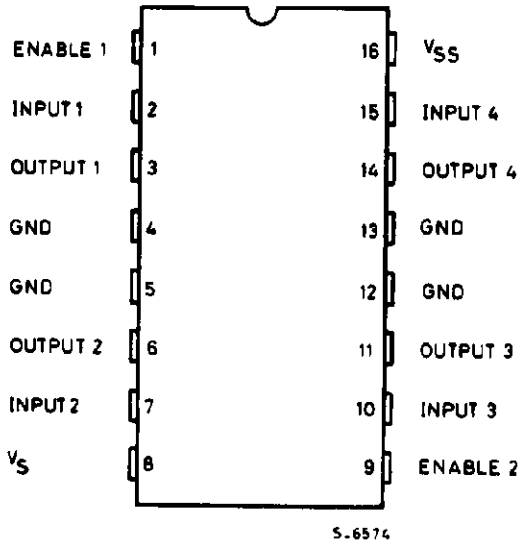

Powerdip(12+2+2)

THERMAL DATA

Symbol	Decription		DIP	SO	Unit
$R_{th\ j\text{-}pins}$	Thermal Resistance Junction-pins	max.	–	14	°C/W
$R_{th\ j\text{-}amb}$	Thermal Resistance junction-ambient	max.	80	50 (*)	°C/W
$R_{th\ j\text{-}case}$	Thermal Resistance Junction-case	max.	14	–	

(*) With 6sq. cm on board heatsink.

ELECTRICAL CHARACTERISTICS (for each channel, V_S = 24 V, V_{SS} = 5 V, T_{amb} = 25 °C, unless otherwise specified)

Symbol	Parameter	Test Conditions	Min.	Typ.	Max.	Unit
V_S	Supply Voltage (pin 10)		V_{SS}		36	V
V_{SS}	Logic Supply Voltage (pin 20)		4.5		36	V
I_S	Total Quiescent Supply Current (pin 10)	V_i = L ; I_O = 0 ; V_{en} = H		2	6	mA
		V_i = H ; I_O = 0 ; V_{en} = H		16	24	mA
		V_{en} = L			4	mA
I_{SS}	Total Quiescent Logic Supply Current (pin 20)	V_i = L ; I_O = 0 ; V_{en} = H		44	60	mA
		V_i = H ; I_O = 0 ; V_{en} = H		16	22	mA
		V_{en} = L		16	24	mA
V_{IL}	Input Low Voltage (pin 2, 9, 12, 19)		– 0.3		1.5	V
V_{IH}	Input High Voltage (pin 2, 9, 12, 19)	$V_{SS} \leq 7$ V	2.3		V_{SS}	V
		$V_{SS} > 7$ V	2.3		7	V
I_{IL}	Low Voltage Input Current (pin 2, 9, 12, 19)	V_{IL} = 1.5 V			– 10	µA
I_{IH}	High Voltage Input Current (pin 2, 9, 12, 19)	2.3 V $\leq V_{IH} \leq V_{SS}$ – 0.6 V		30	100	µA
$V_{en\,L}$	Enable Low Voltage (pin 1, 11)		– 0.3		1.5	V
$V_{en\,H}$	Enable High Voltage (pin 1, 11)	$V_{SS} \leq 7$ V	2.3		V_{SS}	V
		$V_{SS} > 7$ V	2.3		7	V
$I_{en\,L}$	Low Voltage Enable Current (pin 1, 11)	$V_{en\,L}$ = 1.5 V		– 30	– 100	µA
$I_{en\,H}$	High Voltage Enable Current (pin 1, 11)	2.3 V $\leq V_{en\,H} \leq V_{SS}$ – 0.6 V			± 10	µA
$V_{CE(sat)H}$	Source Output Saturation Voltage (pins 3, 8, 13, 18)	I_O = – 0.6 A		1.4	1.8	V
$V_{CE(sat)L}$	Sink Output Saturation Voltage (pins 3, 8, 13, 18)	I_O = + 0.6 A		1.2	1.8	V
V_F	Clamp Diode Forward Voltage	I_O = 600nA		1.3		V
t_r	Rise Time (*)	0.1 to 0.9 V_O		250		ns
t_f	Fall Time (*)	0.9 to 0.1 V_O		250		ns
t_{on}	Turn-on Delay (*)	0.5 V_i to 0.5 V_O		750		ns
t_{off}	Turn-off Delay (*)	0.5 V_i to 0.5 V_O		200		ns

(*) See fig. 1.

TRUTH TABLE (one channel)

Input	Enable (*)	Output
H	H	H
L	H	L
H	L	Z
L	L	Z

Z = High output impedance
(*) Relative to the considered channel

Figure 1: Switching Times

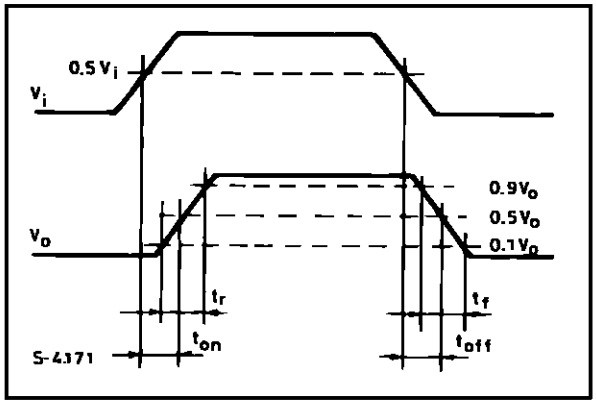

Figure 2: Junction to ambient thermal resistance vs. area on board heatsink (SO12+4+4 package)

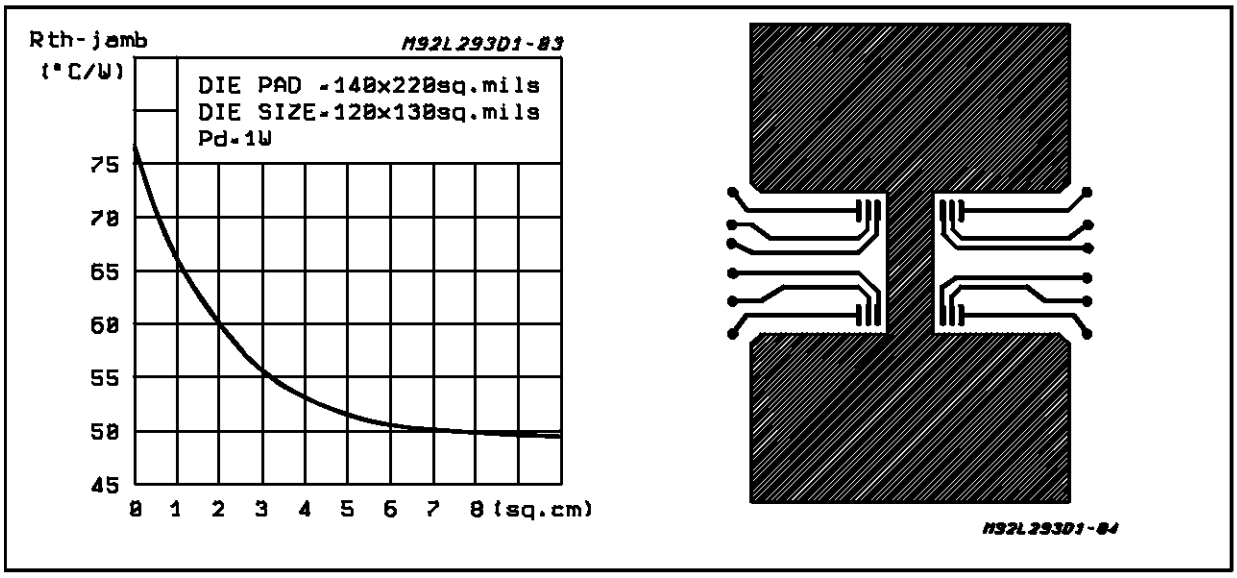

POWERDIP16 PACKAGE MECHANICAL DATA

DIM.	mm			inch		
	MIN.	TYP.	MAX.	MIN.	TYP.	MAX.
a1	0.51			0.020		
B	0.85		1.40	0.033		0.055
b		0.50			0.020	
b1	0.38		0.50	0.015		0.020
D			20.0			0.787
E		8.80			0.346	
e		2.54			0.100	
e3		17.78			0.700	
F			7.10			0.280
I			5.10			0.201
L		3.30			0.130	
Z			1.27			0.050

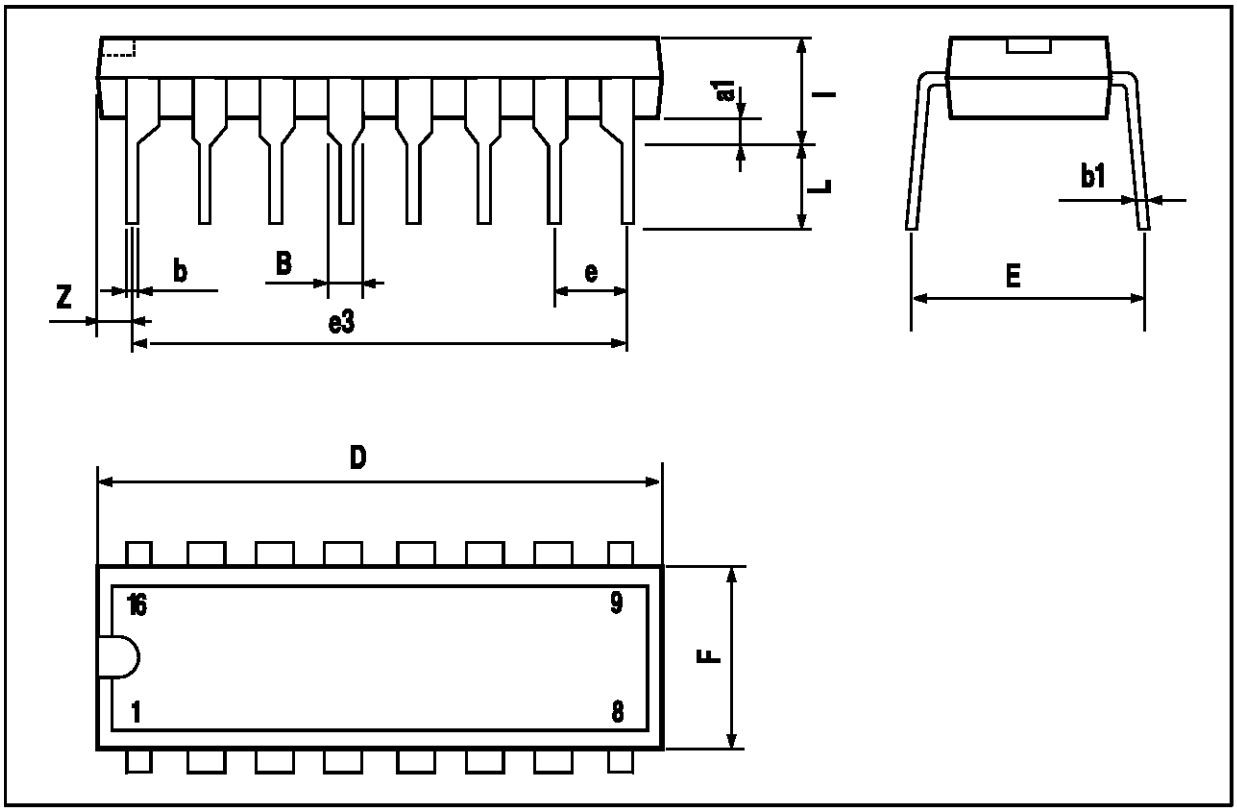

SO20 PACKAGE MECHANICAL DATA

DIM.	mm			inch		
	MIN.	TYP.	MAX.	MIN.	TYP.	MAX.
A			2.65			0.104
a1	0.1		0.2	0.004		0.008
a2			2.45			0.096
b	0.35		0.49	0.014		0.019
b1	0.23		0.32	0.009		0.013
C		0.5			0.020	
c1		45			1.772	
D		1	12.6		0.039	0.496
E	10		10.65	0.394		0.419
e		1.27			0.050	
e3		11.43			0.450	
F		1	7.4		0.039	0.291
G	8.8		9.15	0.346		0.360
L	0.5		1.27	0.020		0.050
M			0.75			0.030
S	8° (max.)					

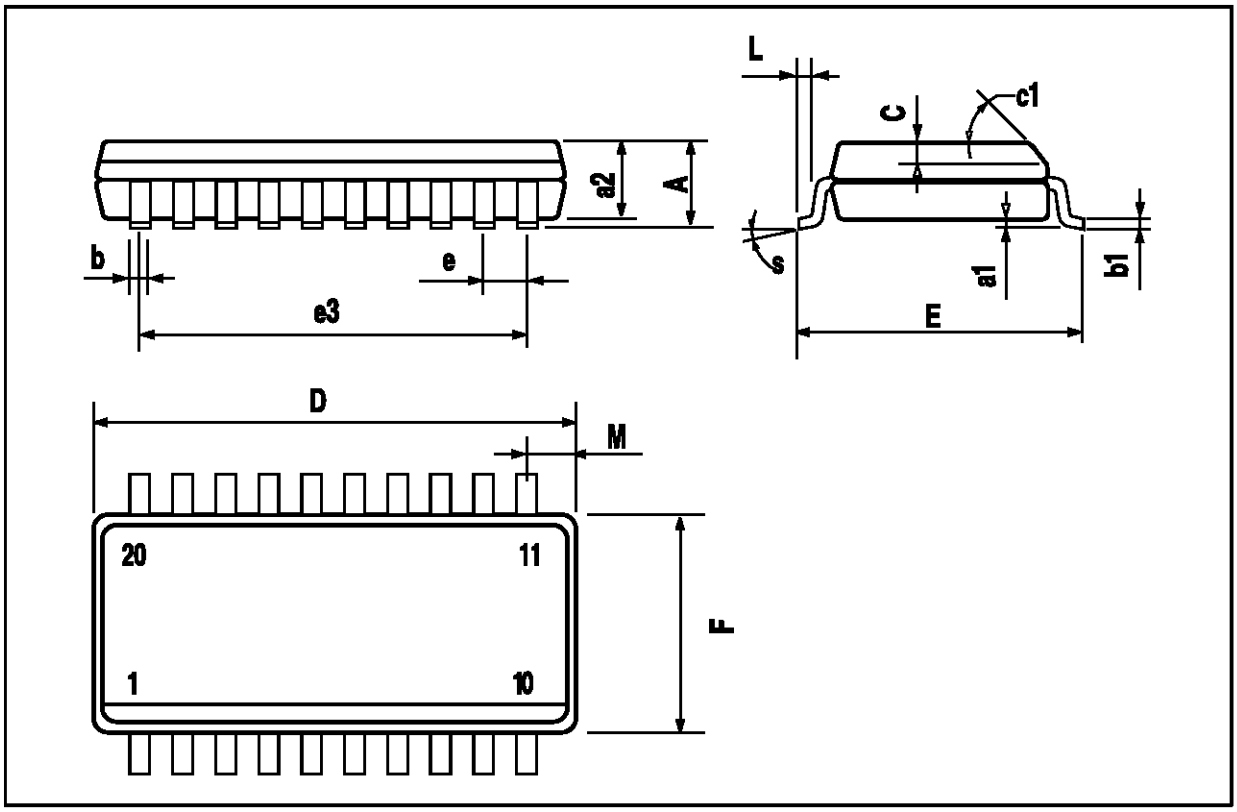

Information furnished is believed to be accurate and reliable. However, SGS-THOMSON Microelectronics assumes no responsibility for the consequences of use of such information nor for any infringement of patents or other rights of third parties which may result from its use. No license is granted by implication or otherwise under any patent or patent rights of SGS-THOMSON Microelectronics. Specification mentioned in this publication are subject to change without notice. This publication supersedes and replaces all information previously supplied. SGS-THOMSON Microelectronics products are not authorized for use as critical components in life support devices or systems without express written approval of SGS-THOMSON Microelectronics.

© 1996 SGS-THOMSON Microelectronics – Printed in Italy – All Rights Reserved

SGS-THOMSON Microelectronics GROUP OF COMPANIES

Australia - Brazil - Canada - China - France - Germany - Hong Kong - Italy - Japan - Korea - Malaysia - Malta - Morocco - The Netherlands - Singapore - Spain - Sweden - Switzerland - Taiwan - Thailand - United Kingdom - U.S.A.

SGS-THOMSON MICROELECTRONICS

L293B
L293E

PUSH-PULL FOUR CHANNEL DRIVERS

- OUTPUT CURRENT 1A PER CHANNEL
- PEAK OUTPUT CURRENT 2A PER CHANNEL (non repetitive)
- INHIBIT FACILITY
- HIGH NOISE IMMUNITY
- SEPARATE LOGIC SUPPLY
- OVERTEMPERATURE PROTECTION

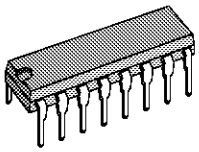

DIP16

ORDERING NUMBER : L293B

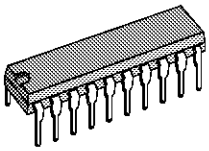

POWERDIP (16 + 2+ 2)

ORDERING NUMBER : L293E

DESCRIPTION

The L293B and L293E are quad push-pull drivers capable of delivering output currents to 1A per channel. Each channel is controlled by a TTL-compatible logic input and each pair of drivers (a full bridge) is equipped with an inhibit input which turns off all four transistors. A separate supply input is provided for the logic so that it may be run off a lower voltage to reduce dissipation.

Additionally, the L293E has external connection of sensing resistors, for switchmode control.

The L293B and L293E are package in 16 and 20-pin plastic DIPs respectively ; both use the four center pins to conduct heat to the printed circuit board.

PIN CONNECTIONS

DIP16 - L293B

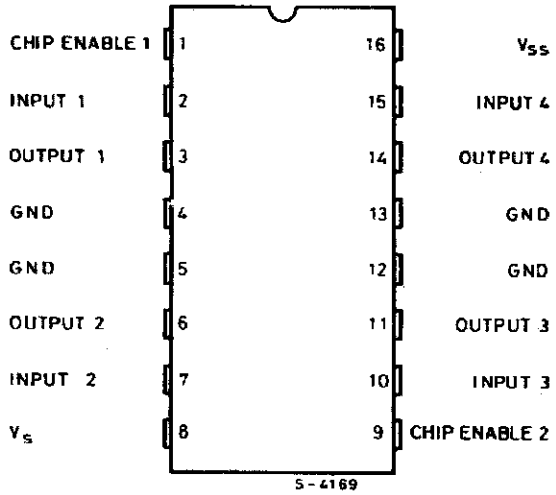

POWERDIP (16+2+2) - L293E

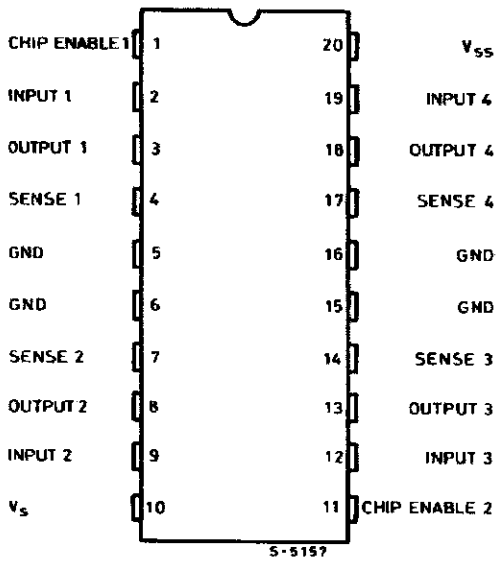

BLOCK DIAGRAMS

DIP16 - L293B

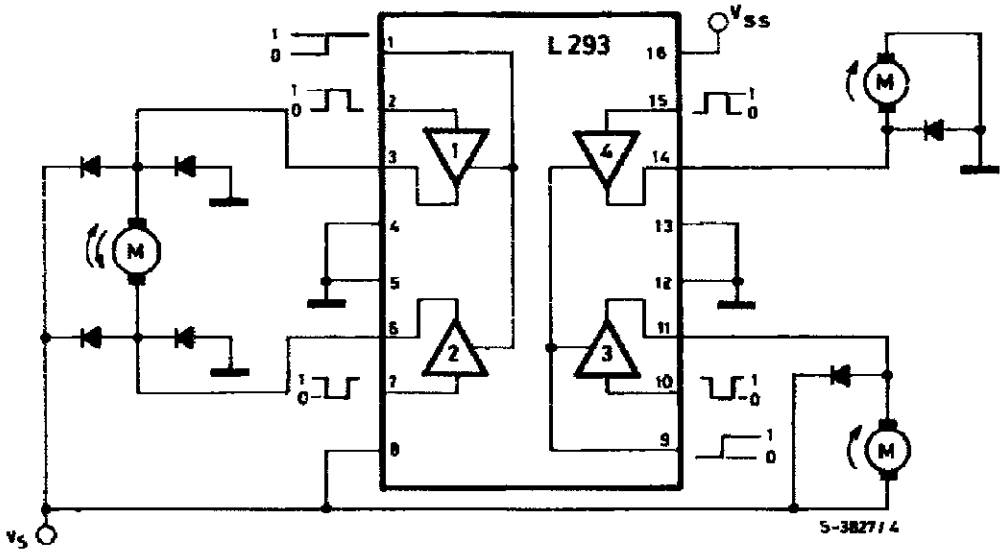

POWERDIP (16+2+2) - L293E

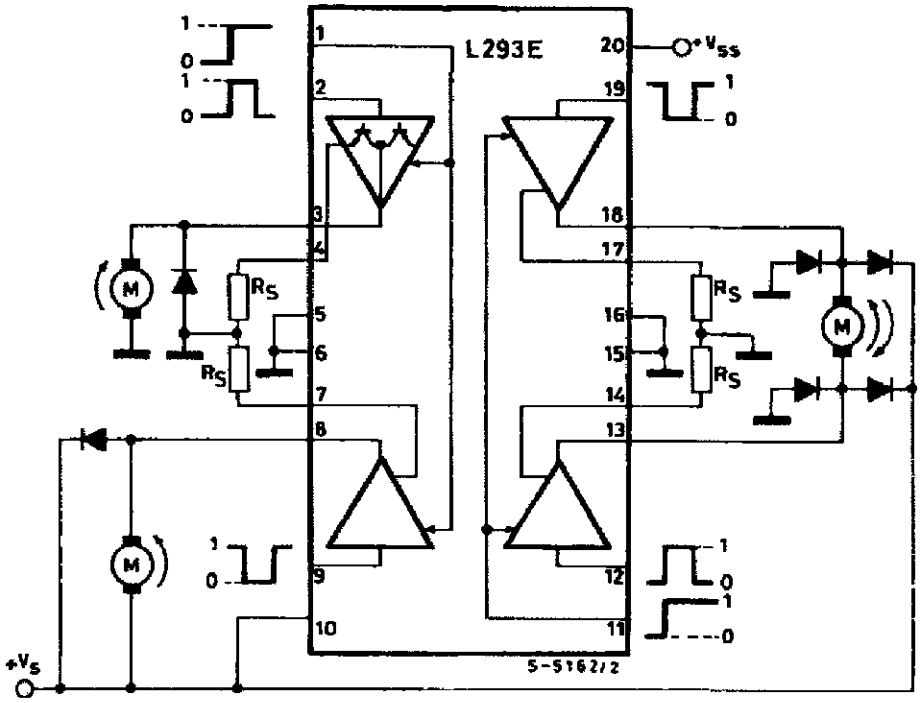

SCHEMATIC DIAGRAM

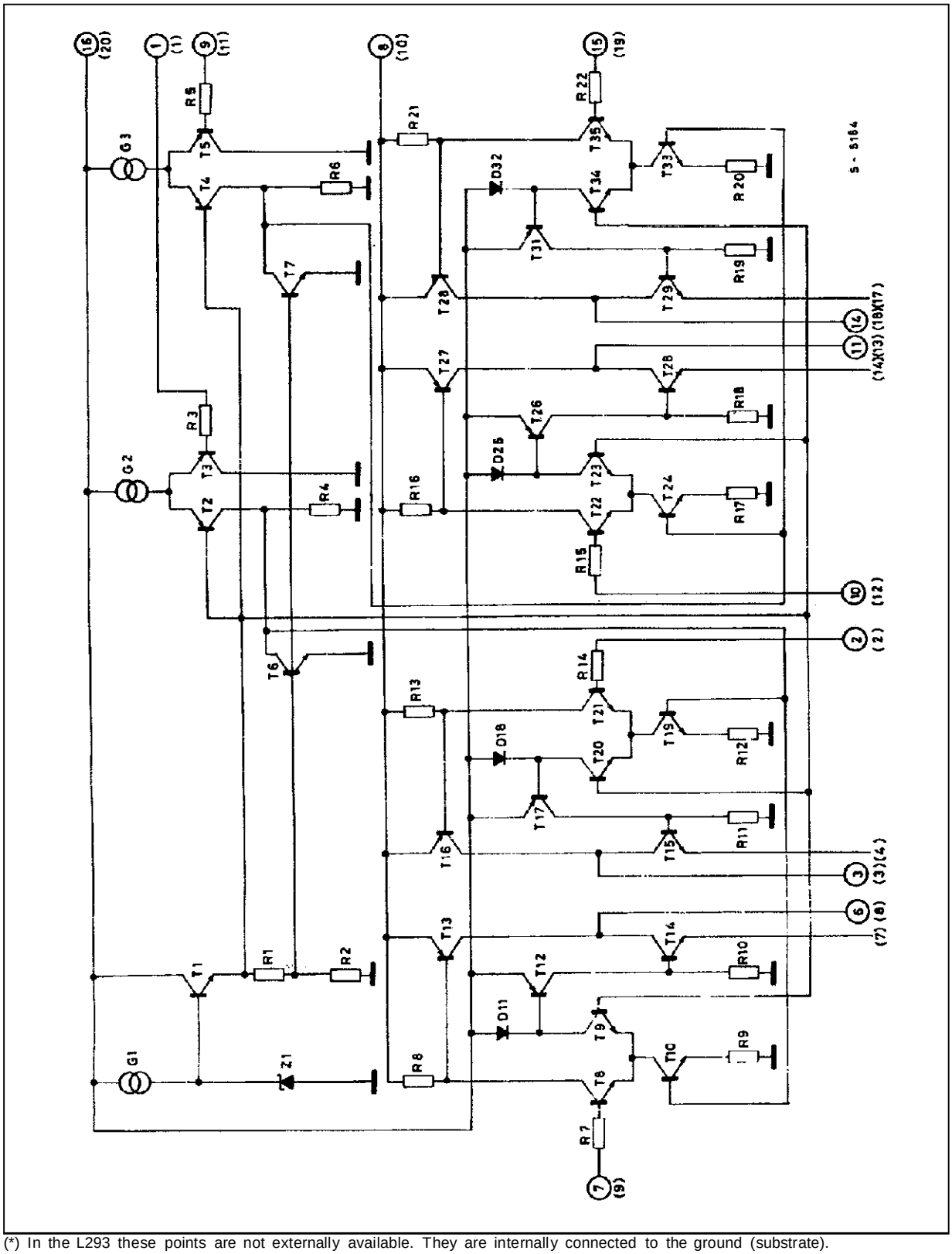

(*) In the L293 these points are not externally available. They are internally connected to the ground (substrate).
O Pins of L293 () Pins of L293E.

ABSOLUTE MAXIMUM RATINGS

Symbol	Parameter	Value	Unit
V_s	Supply Voltage	36	V
V_{ss}	Logic Supply Voltage	36	V
V_i	Input Voltage	7	V
V_{inh}	Inhibit Voltage	7	V
I_{out}	Peak Output Current (non repetitive t = 5ms)	2	A
P_{tot}	Total Power Dissipation at $T_{ground\text{-}pins}$ = 80°C	5	W
T_{stg}, T_j	Storage and Junction Temperature	–40 to +150	°C

THERMAL DATA

Symbol	Parameter		Value	Unit
$R_{th\ j\text{-}case}$	Thermal Resistance Junction-case	Max.	14	°C/W
$R_{th\ j\text{-}amb}$	Thermal Resistance Junction-ambient	Max.	80	°C/W

ELECTRICAL CHARACTERISTICS

For each channel, V_S = 24V, V_{SS} = 5V, T_{amb} = 25°C, unless otherwise specified

Symbol	Parameter	Test Conditions	Min.	TYp.	Max.	Unit
V_s	Supply Voltage		V_{ss}		36	V
V_{ss}	Logic Supply Voltage		4.5		36	V
I_s	Total Quiescent Supply Current	V_i = L I_o = 0 V_{inh} = H V_i = H I_o = 0 V_{inh} = H V_{inh} = L		2 16	6 24 4	mA
I_{ss}	Total Quiescent Logic Supply Current	V_i = L I_o = 0 V_{inh} = H V_i = H I_o = 0 V_{inh} = H V_{inh} = L		44 16 16	60 22 24	mA
V_{iL}	Input Low Voltage		-03.		1.5	V
V_{iH}	Input High Voltage	$V_{SS} \leq 7V$ $V_{ss} > 7V$	2.3 2.3		V_{ss} 7	V
I_{iL}	Low Voltage Input Current	V_{il} = 1.5V			-10	µA
I_{iH}	High Voltage Input Current	$2.3V \leq V_{IH} \leq V_{ss} - 0.6V$		30	100	µA
V_{inhL}	Inhibit Low Voltage		-0.3		1.5	V
V_{inhH}	Inhibit High Voltage	$V_{SS} \leq 7V$ $V_{ss} > 7V$	2.3 2.3		V_{ss} 7	V
I_{inhL}	Low Voltage Inhibit Current	V_{inhL} = 1.5V		-30	-100	µA
I_{inhH}	High Voltage Inhibit Current	$2.3V \leq V_{inhH} \leq V_{ss} - 0.6V$			±10	µA
V_{CEsatH}	Source Output Saturation Voltage	I_o = -1A		1.4	1.8	V
V_{CEsatL}	Sink Output Saturation Voltage	I_o = 1A		1.2	1.8	V
V_{SENS}	Sensing Voltage (pins 4, 7, 14, 17) (**)				2	V
t_r	Rise Time	0.1 to 0.9 V_o (*)		250		ns
t_f	Fall Time	0.9 to 0.1 V_o (*)		250		ns
t_{on}	Turn-on Delay	0.5 V_i to 0.5 V_o (*)		750		ns
t_{off}	Turn-off Delay	0.5 V_i to 0.5 V_o (*)		200		ns

* See figure 1
** Referred to L293E

TRUTH TABLE

V_i (each channel)	V_o	V_{inh} (∞)
H	H	H
L	L	H
H	X (°)	L
L	X (°)	L

(*) High output impedance
(**) Relative to the considerate channel

Figure 1 : Switching Timers

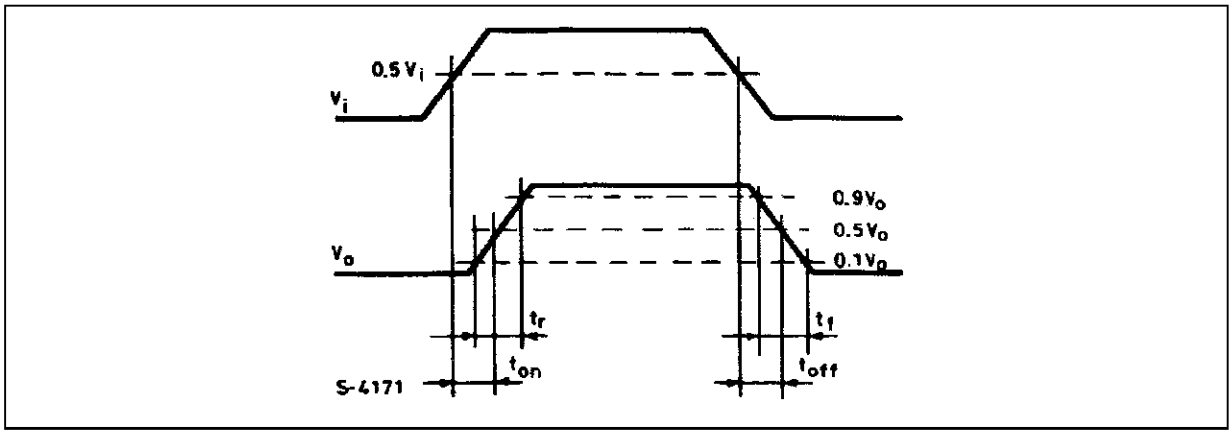

Figure 2 : Saturation voltage versus Output Current

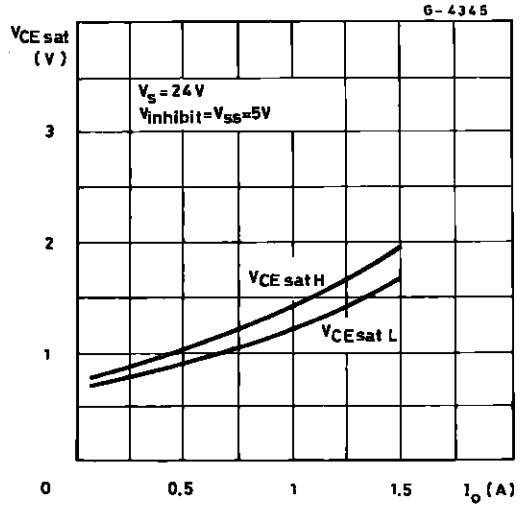

Figure 3 : Source Saturation Voltage versus Ambient Temperature

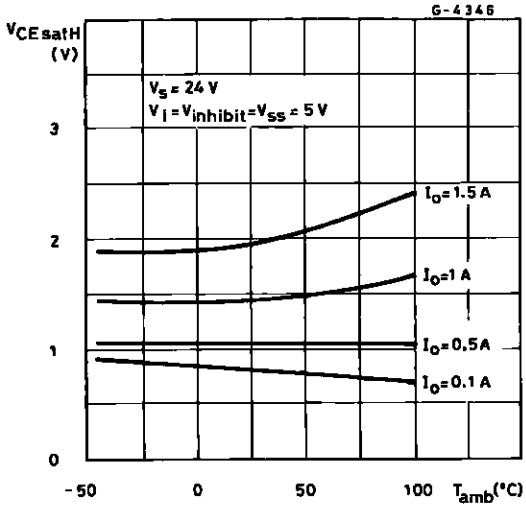

Figure 4 : Sink Saturation Voltage versus Ambient Temperature

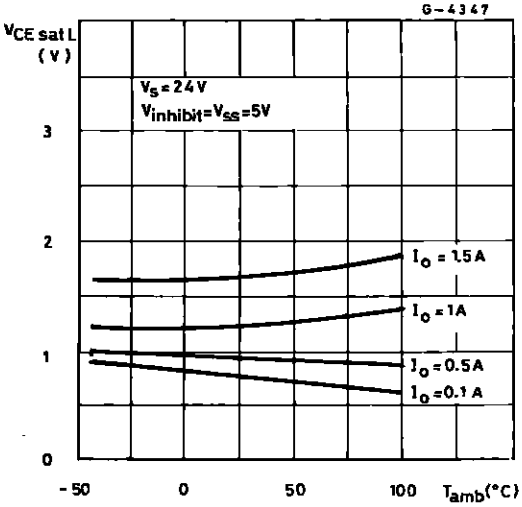

Figure 5 : Quiescent Logic Supply Current versus Logic Supply Voltage

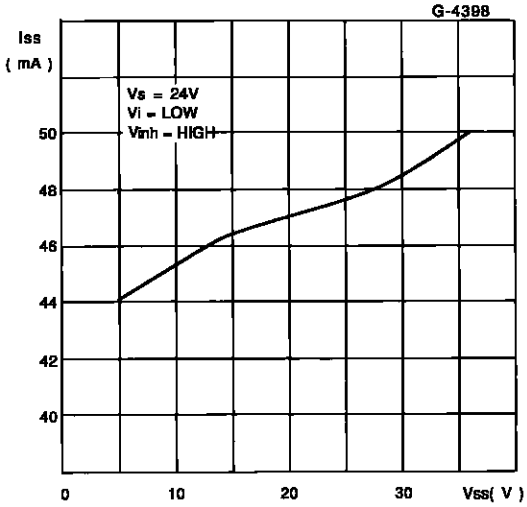

Figure 6 : Output Voltage versus Input Voltage

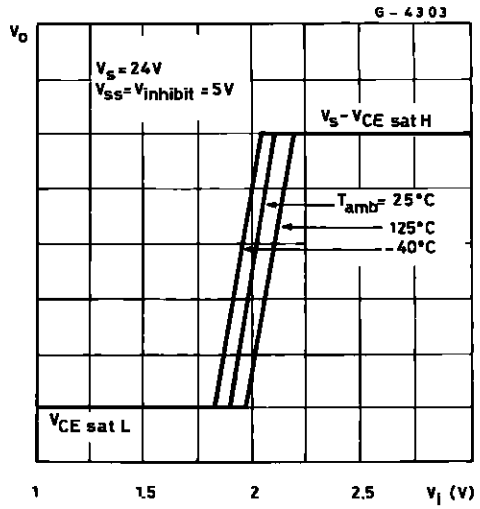

Figure 7 : Output Voltage versus Inhibit Voltage

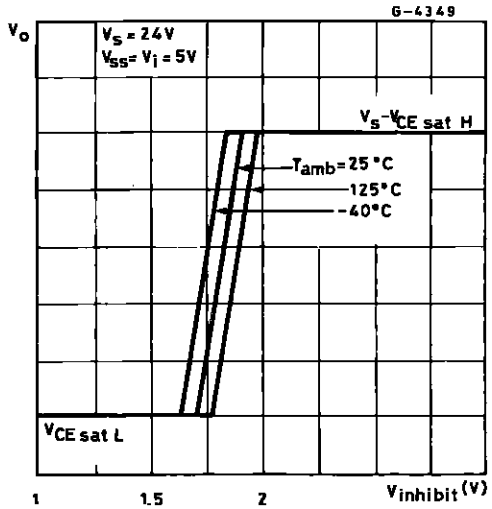

APPLICATION INFORMATION

Figure 8 : DC Motor Controls (with connection to ground and to the supply voltage)

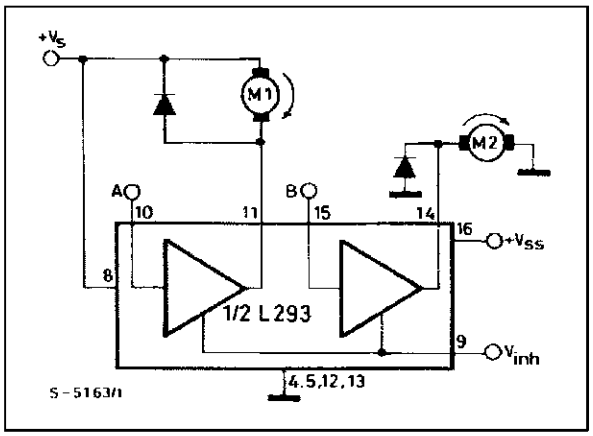

V_{inh}	A	M1	B	M2
H	H	Fast Motor Stop	H	Run
H	L	Run	L	Fast Motor Stop
L	X	Free Running Motor Stop	X	Free Running Motor Stop

L = Low H = High X = Don't Care

Figure 9 : Bidirectional DC Motor Control

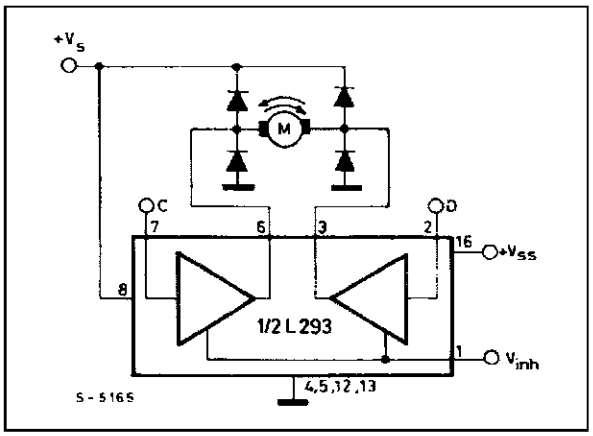

Inputs	Function	
V_{inh} = H	C = H ; D = L	Turn Right
	C = L ; D = H	Turn Left
	C = D	Fast Motor Stop
V_{inh} = L	C = X ; D = X	Free Running Motor Stop

L = Low H = High X = Don't Care

Figure 10 : Bipolar Stepping Motor Control

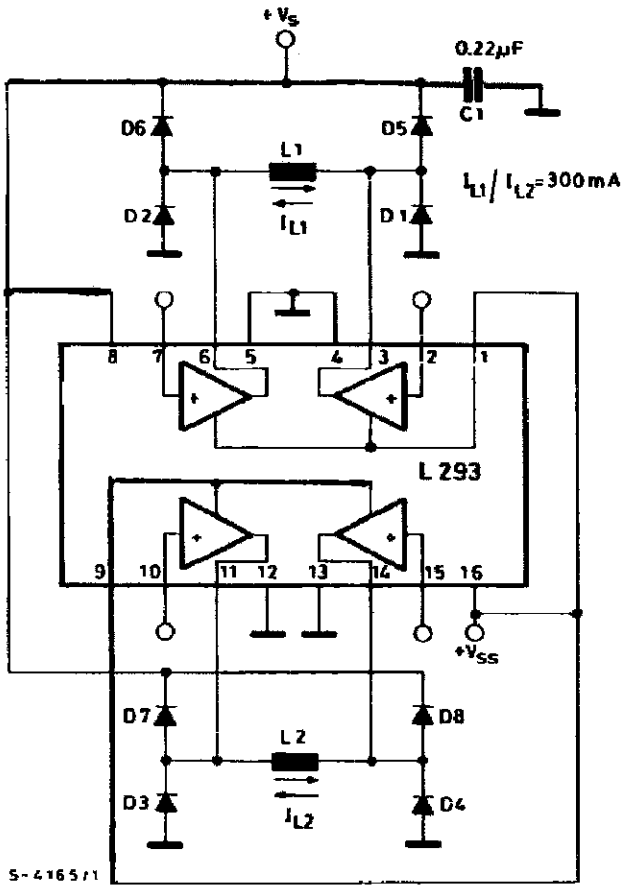

Figure 11 : Stepping Motor Driver with Phase Current Control and Short Circuit Protection

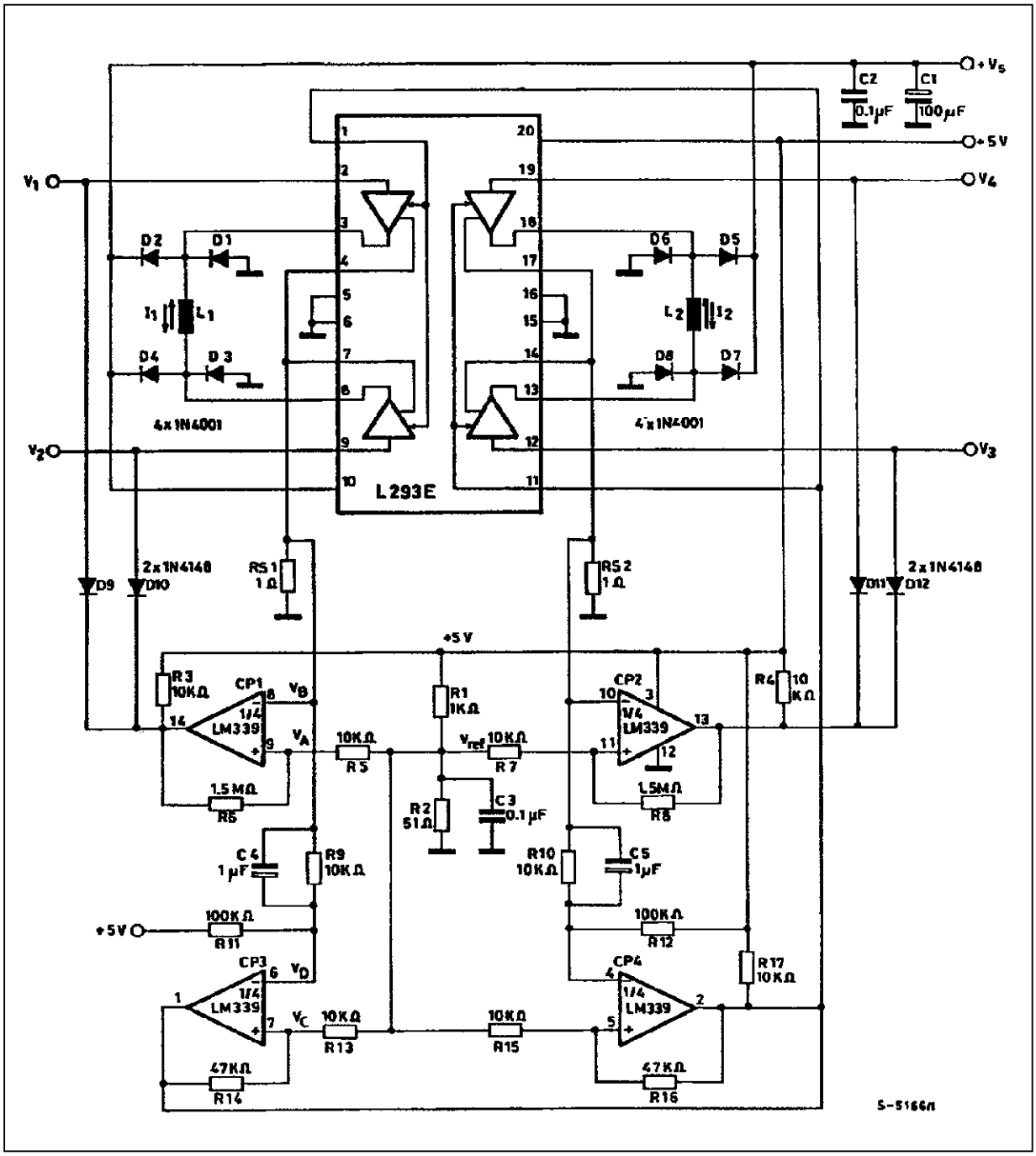

MOUNTING INSTRUCTIONS

The $R_{th\ j\text{-}amb}$ of the L293B and the L293E can be reduced by soldering the GND pins to a suitable copper area of the printed circuit board as shown in figure 12 or to an external heatsink (figure 13).

During soldering the pins temperature must not exceed 260°C and the soldering time must not be longer than 12 seconds.

The external heatsink or printed circuit copper area must be connected to electrical ground.

Figure 12 : Example of P.C. Board Copper Area which is Used as Heatsink

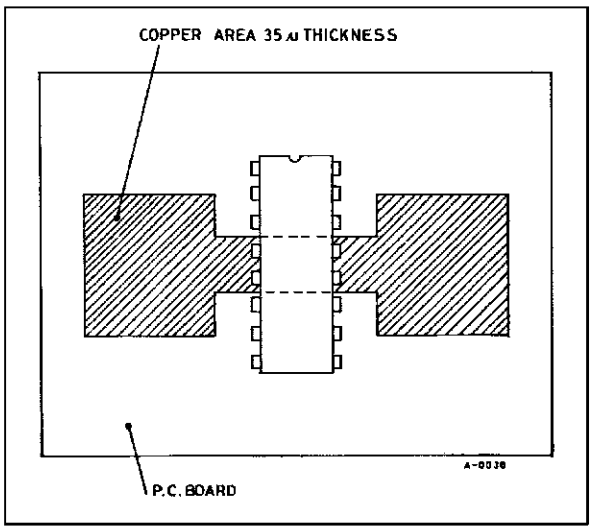

Figure 13 : External Heatsink Mounting Example (Rth = 30°C/W)

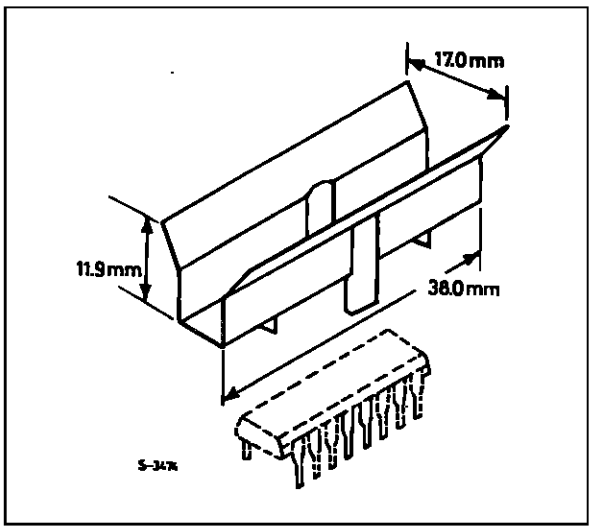

DIP16 PACKAGE MECHANICAL DATA

Dimensions	Millimeters			Inches		
	Min.	Typ.	Max.	Min.	Typ.	Max.
a1	0.51			0.020		
B	0.77		1.65	0.030		0.065
b		0.5			0.020	
b1		0.25			0.010	
D			20			0.787
E		8.5			0.335	
e		2.54			0.100	
e3		17.78			0.700	
F			7.1			0.280
i			5.1			0.201
L		3.3			0.130	
Z			1.27			0.050

DIP16PW.TBL

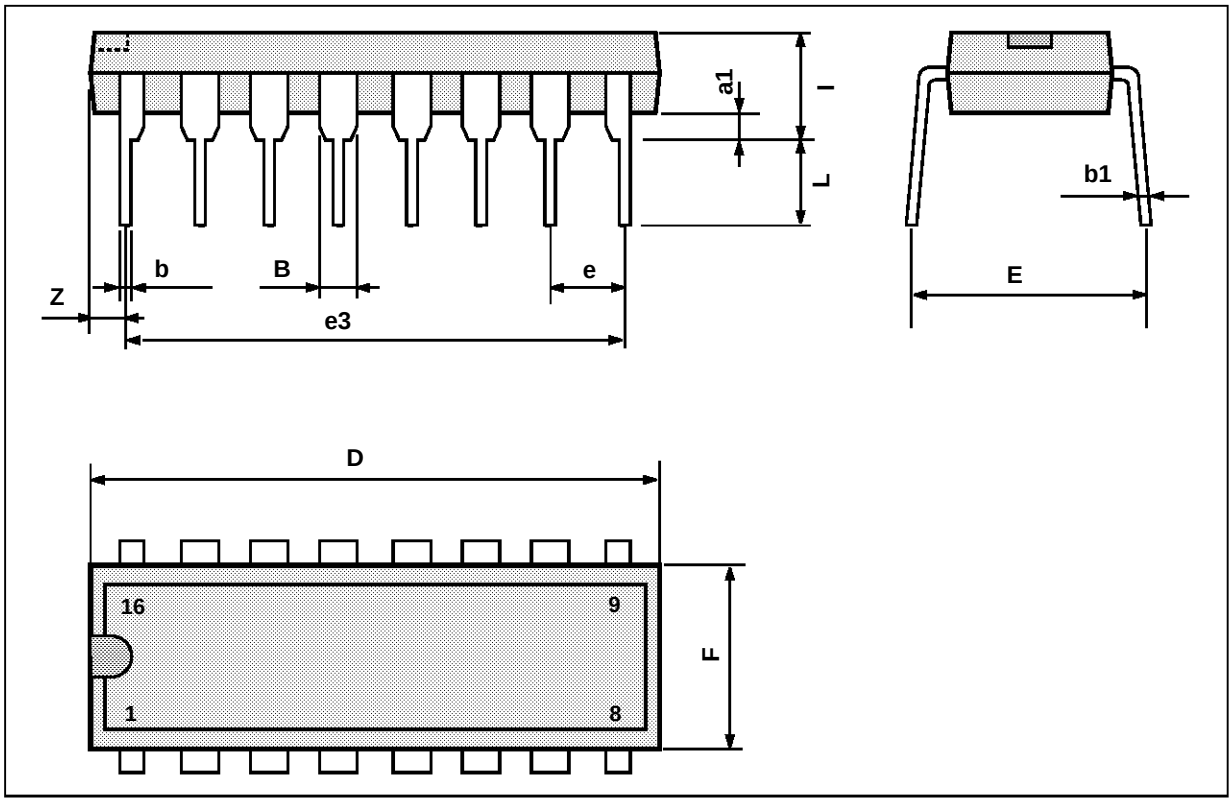

PMDIP16W.EPS

POWERDIP (16+2+2) PACKAGE MECHANICAL DATA

Dimensions	Millimeters			Inches		
	Min.	Typ.	Max.	Min.	Typ.	Max.
a1	0.51			0.020		
B	0.85		1.4	0.033		0.055
b		0.5			0.020	
b1	0.38		0.5	0.015		0.020
D			24.8			0.976
E		8.8			0.346	
e		2.54			0.100	
e3		22.86			0.900	
F			7.1			0.280
i			5.1			0.201
L		3.3			0.130	
Z			1.27			0.050

DIP20PW.TBL

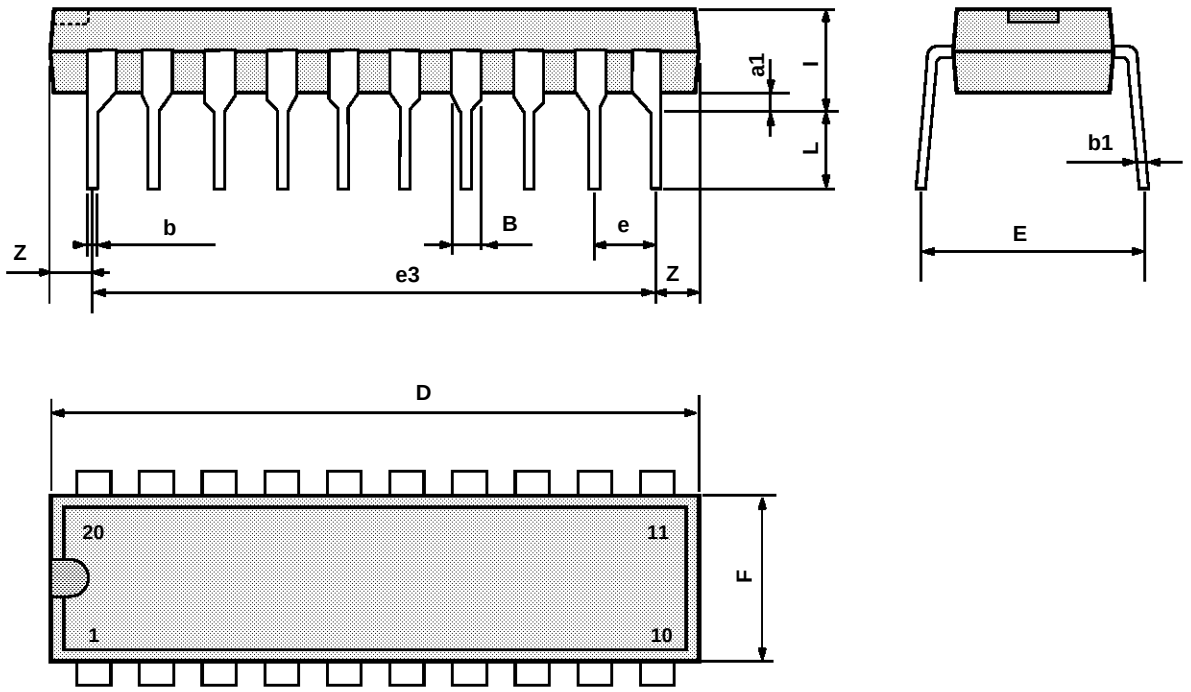

PMDIP20WEPS

Information furnished is believed to be accurate and reliable. However, SGS-THOMSON Microelectronics assumes no responsibility for the consequences of use of such information nor for any infringement of patents or other rights of third parties which may result from its use. No license is granted by implication or otherwise under any patent or patent rights of SGS-THOMSON Microelectronics. Specifications mentioned in this publication are subject to change without notice. This publication supersedes and replaces all information previously supplied. SGS-THOMSON Microelectronics products are not authorized for use as critical components in life support devices or systems without express written approval of SGS-THOMSON Microelectronics.

© 1994 SGS-THOMSON Microelectronics - All Rights Reserved

SGS-THOMSON Microelectronics GROUP OF COMPANIES

Australia - Brazil - France - Germany - Hong Kong - Italy - Japan - Korea - Malaysia - Malta - Morocco - The Netherlands - Singapore - Spain - Sweden - Switzerland - Taiwan - Thaliand - United Kingdom - U.S.A.

SGS-THOMSON MICROELECTRONICS

L295

DUAL SWITCH-MODE SOLENOID DRIVER

PRELIMINARY DATA

- HIGH CURRENT CAPABILITY (up to 2.5A per channel)
- HIGH VOLTAGE OPERATION (up to 46V for power stage)
- HIGH EFFICIENCY SWITCHMODE OPERATION
- REGULATED OUTPUT CURRENT (adjustable)
- FEW EXTERNAL COMPONENTS
- SEPARATE LOGIC SUPPLY
- THERMAL PROTECTION

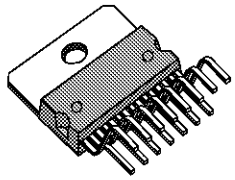

Multiwatt 15

ORDER CODE : L295

DESCRIPTION

The L295 is a monolithic integrated circuit in a 15 - lead Multiwatt ® package; it incorporates all the functions for direct interfacing between digital circuitry and inductive loads. The L295 is designed to accept standard microprocessor logic levels at the inputs and can drive 2 solenoids. The output current is completely controlled by means of a switching technique allowing very efficient operation. Furthermore, it includes an enable input and dual supplies (for interfacing with peripherals running at a higher voltage than the logic).

The L295 is particularly suitable for applications such as hammer driving in matrix printers, step motor driving and electromagnet controllers.

ABSOLUTE MAXIMUM RATINGS

Symbol	Parameter	Value	Unit
V_s	Supply voltage	50	V
V_{ss}	Logic supply voltage	12	V
V_{EN}, V_i	Enable and input voltage	7	V
V_{ref}	Reference voltage	7	V
Io	Peak output current (each channel)		
	- non repetitive (t = 100 µsec)	3	A
	- repetitive (80% on - 20% off; T_{on} = 10 ms)	2.5	A
	- DC operation	2	A
Ptot	Total power dissipation (at Tcase = 75 °C	25	W
Tstg, Tj	Storage and junction temperature	- 40 to 150	°C

APPLICATION CIRCUIT

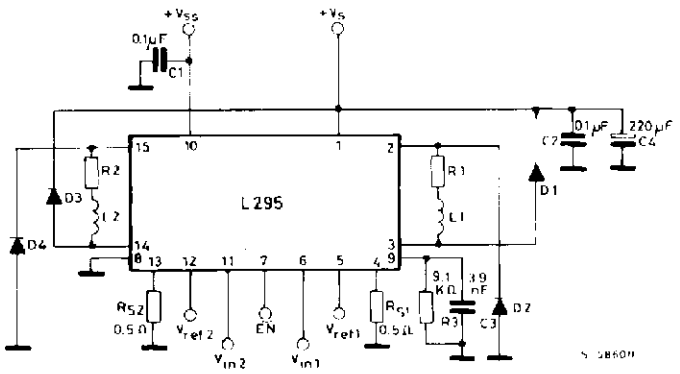

CONNECTION DIAGRAM (top view)

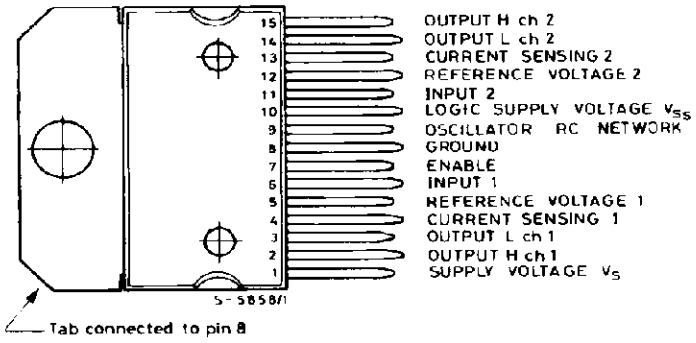

BLOCK DIAGRAM

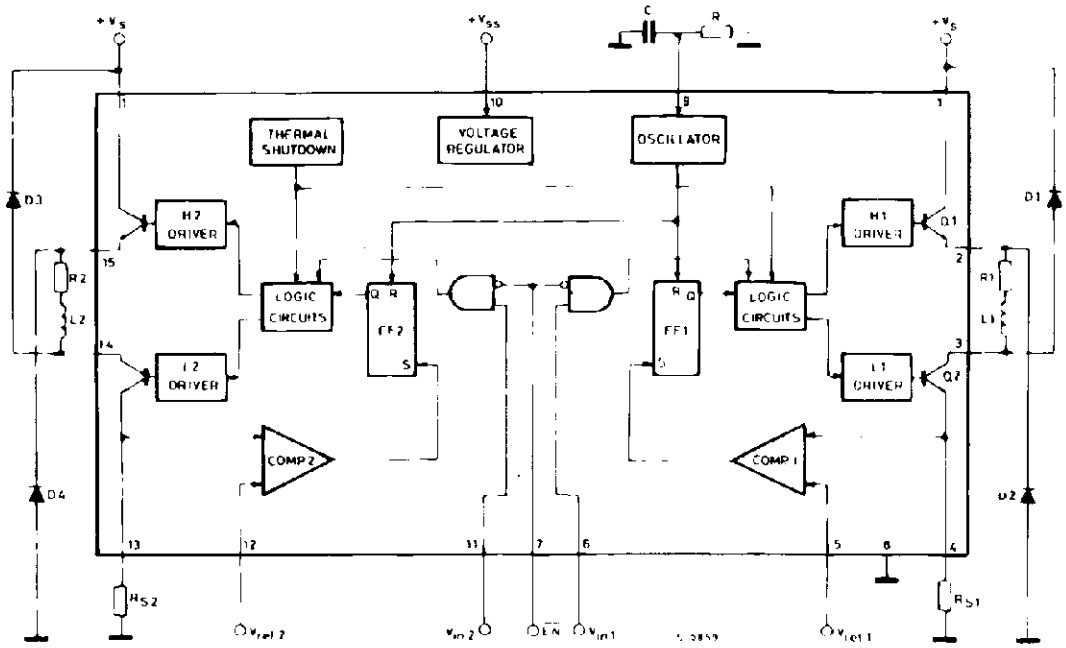

THERMAL DATA

Symbol	Parameter		Value	Unit
$R_{th\text{-}j\text{-}case}$	Thermal resistance junction-case	max	3	°C/W
$R_{th\text{-}j\text{-}amb}$	Thermal resistance junction-ambient	max	35	°C/W

ELECTRICAL CHARACTERISTICS (Refer to the application circuit, V_{SS} = 5V, V_S = 36V; T_j = 25°C; L = Low; H = High; unless otherwise specified)

Symbol	Parameter	Test conditions		Min.	Typ.	Max.	Unit
V_S	Supply Voltage			12		46	V
V_{SS}	Logic Supply Voltage			4.75		10	V
I_d	Quiescent drain current (from VSS)	V_S = 46V; V_{i1} = V_{i2} = V_{EN} = L				4	mA
I_{SS}	Quiescent drain current (from VS)	V_{SS} = 10 V				46	mA
V_{i1},,V_{i2}	Input Voltage		Low	-0.3		0.8	V
			High	2.2		7	
V_{EN}	Enable Input Voltage		Low	-0.3		0.8	V
			High	2.2		7	
I_{i1}, I_{i2}	Input Current		V_{i1} = V_{i2} = L			-100	µA
			V_{i1} = V_{i2} = H			10	
I_{EN}	Enable Input Current		V_{EN} = L			-100	µA
			V_{EN} = H			10	
V_{ref1}, V_{ref2}	Input Reference Voltage			0.2		2	V
I_{ref1}, I_{ref2}m	Input Reference Voltage					-5	µA
F_{osc}	Oscillation Frequency	C = 3.9 nF;	R = 9.1 KΩ		25		KHz
I_p / V_{ref}	Transconductance (each ch.)	V_{ref} = 1V		1.9	2	2.1	A/V
V_{drop}	Total output voltage drop (each channel) (*)	I_o = 2 A			2.8	3.6	V
V_{sens1} V_{sens2}	External sensing resistors voltage drop					2	V

(*) V_{drop} = $V_{CEsat\ Q1}$ + $V_{CEsat\ Q2}$.

APPLICATION CIRCUIT

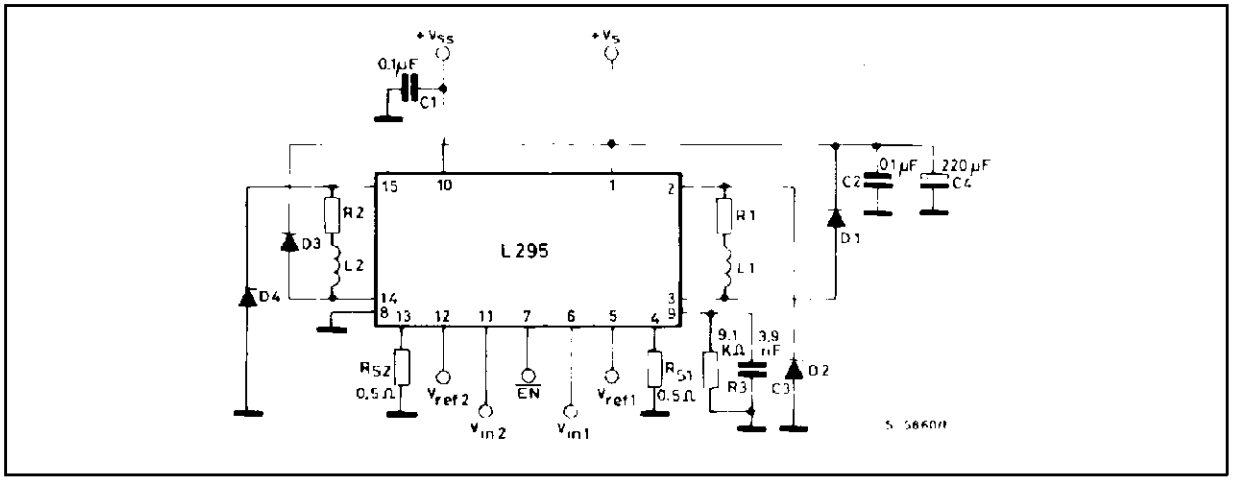

D2, D4 = 2A High speed diodes
D1, D3 = 1A High speed diodes) trr ≤ 200 ns

R1 = R2 = 2Ω
L1 = L2 = 5 mH

FUNCTIONAL DESCRIPTION

The L295 incorporates two indipendent driver channals with separate inputs and outputs, each capable of driving an inductive load (see block diagram).

The device is controlled by three micriprocessor compatible digital inputs and two analog inputs.

These inputs are:

- $\overline{EN}$ — chip enable (digital input, active low), enables both channels when in the low state.
- V_{in1}, V_{in2} — channel inputs (digital inputs, active high), enable each channel independently. A channel is actived when both $\overline{EN}$ and the appropriate channel input are active.
- V_{ref1}, V_{ref2} — reference voltages (analog inputs), used to program the peak load currents. Peak load current is proportional to V_{ref} .

Since the two channels are identical, only channel one will be described.

The following description applies also the channel two, replacing FF2 for FF1, V_{ref} for V_{ref1} etc.

When the channel is avtivated by low level on the EN input and a high level on the channel input, V_{in2}, the output transistors Q1 and Q2 switch on and current flows in the load according to the exponential law:

$$I = \frac{V}{R1} \left(1 - e^{\frac{-R1\ t}{L1}}\right)$$

where: R1 and R2 are the resistance and inductance of the load and V is the voltage available on the load (V_s - V_{drop} - V_{sense}).

The current increases until the voltage on the external sensing resistor, R_{S1}, reaches the reference voltage, V_{ref1}. This peak current, I_{p1}, is given by:

$$I_{p1} = \frac{V_{ref1}}{R_{S1}}$$

At this point the comparator output, Vomp1, sete the RS flip-flop, FF1, that turns off the output transistor, Q1. The load current flowing through D2, Q2, R_{S1}, decreases according to the law:

$$I = \left(\frac{V_A}{R_1} + I_{p1}\right) e^{\frac{-R1\ t}{L1}} - \frac{V_A}{R1}$$

where $V_A = V_{CEsat\ Q2} + V_{sense} + V_{D2}$

If the oscillator pin (9) is connected to ground the load current falls to zero as shown in fig. 1.

At this time t_2 the channel 1 is disabled, by taking the inputs V_{in1} low and/or $\overline{EN}$ high, and the output transistor Q2 is turned off. The load current flows through D2 and D1 according to the law:

$$I = \left(\frac{V_B}{R_1} + I_{T2} \right) e^{\frac{-R1\ t}{L1}} - \frac{V_B}{R1}$$

where $V_B = V_S + V_{D1} + V_{D2}$

I_{T2} = current value at the time t_2.

Fig. 2 in shows the current waveform obtained with an RC network connected between pin 9 and ground. From to t_1 the current increases as in fig. 1. A difference exists at the time t_2 because the current starts to increase again. At this time a pulse is produced by the oscillator circuit that resets the flip.flop, FF1, and switches on the outout transistor, Q1. The current increases until the drop on the sensing resistor R_{S1} is equal to V_{ref1} (t_3) and the cycle repeats.

The switching frequency depends on the value R and C, as shown in fig. 4 and must be chosen in the range 10 to 30 KHz.

It is possible with external hardware to change the reference voltage V_{ref} in order to obtain a high peak current I_p and a lower holding current I_h (see fig. 3).

The L295 is provided with a thermal protection that switches off all the output transistors when the junction temperature exceeds 150°C. The presence of a hysteresis circuit makes the IC work again aftera fall of the junction temperature of about 20°C.

The analog input pins (V_{ref1} , V_{ref2}) can be left open or connected to V_{ss}; in this case the circuit works with an internal reference voltage of about 2.5V and the peak current in the load is fixed only by the value of R_S:

$$I_p = \frac{2.5}{R_S}$$

SIGNAL WAVEFORMS

Figure 1. Load current waveform with pin 9 connected to GND.

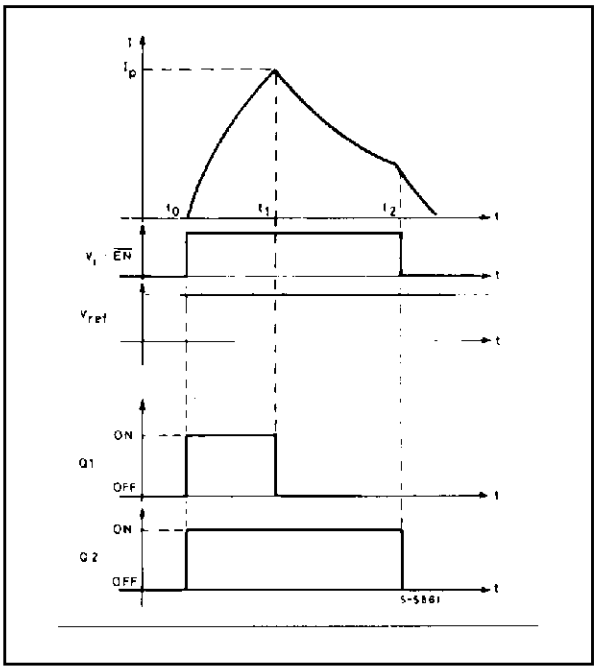

Figure 2. Load current waveform with external R-C network connected between pin 9 and ground.

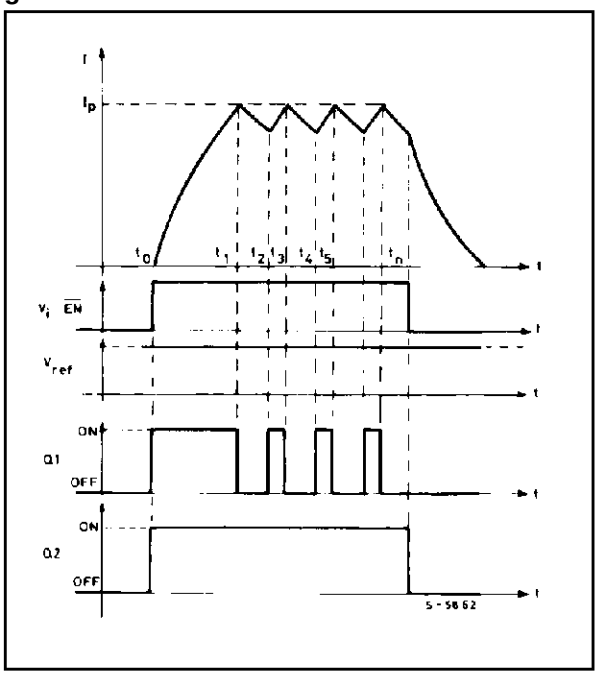

SIGNAL WAVEFORMS (continued)

Figure 3. With V_{ref} changed by hardware.

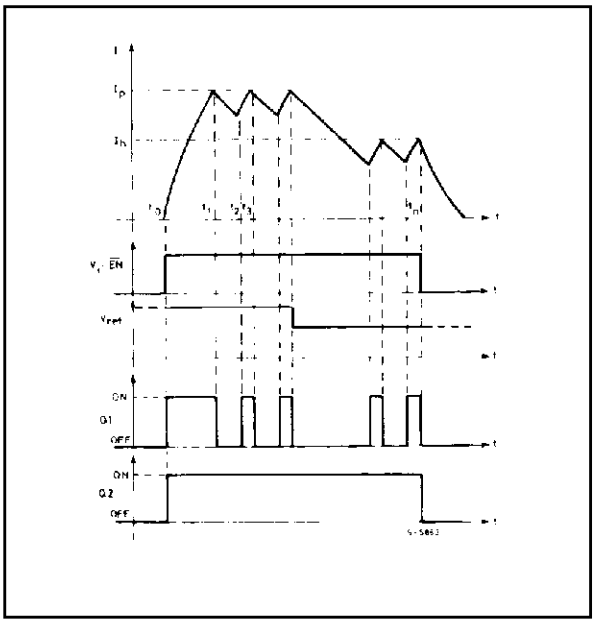

Figure 4. Switching frequency vs. values of R and C.

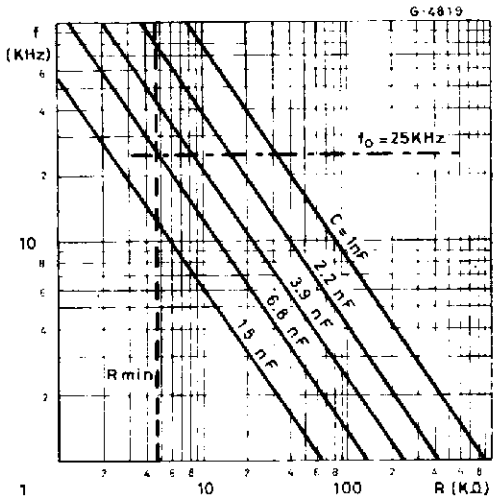

MULTIWATT15 PACKAGE MECHANICAL DATA

DIM.	mm			inch		
	MIN.	TYP.	MAX.	MIN.	TYP.	MAX.
A			5			0.197
B			2.65			0.104
C			1.6			0.063
D		1			0.039	
E	0.49		0.55	0.019		0.022
F	0.66		0.75	0.026		0.030
G	1.02	1.27	1.52	0.040	0.050	0.060
G1	17.53	17.78	18.03	0.690	0.700	0.710
H1	19.6			0.772		
H2			20.2			0.795
L	21.9	22.2	22.5	0.862	0.874	0.886
L1	21.7	22.1	22.5	0.854	0.870	0.886
L2	17.65		18.1	0.695		0.713
L3	17.25	17.5	17.75	0.679	0.689	0.699
L4	10.3	10.7	10.9	0.406	0.421	0.429
L7	2.65		2.9	0.104		0.114
M	4.25	4.55	4.85	0.167	0.179	0.191
M1	4.63	5.08	5.53	0.182	0.200	0.218
S	1.9		2.6	0.075		0.102
S1	1.9		2.6	0.075		0.102
Dia1	3.65		3.85	0.144		0.152

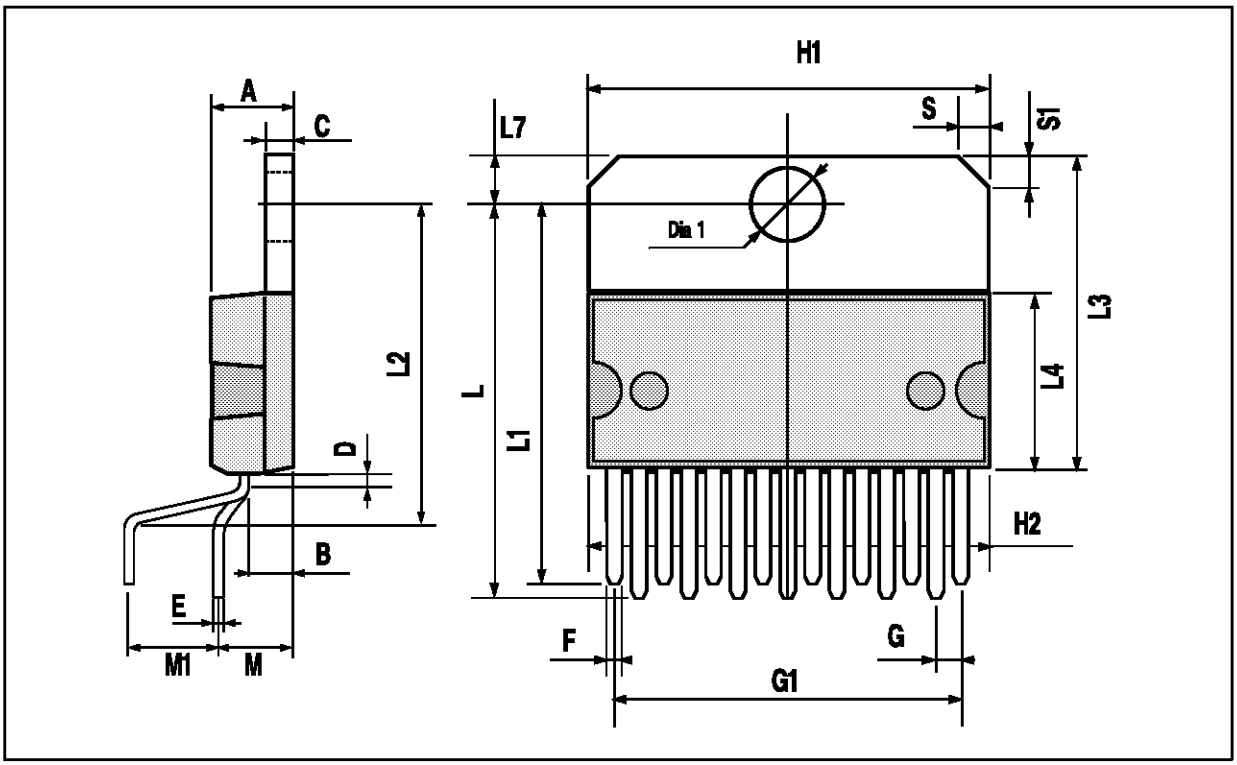

Information furnished is believed to be accurate and reliable. However, SGS-THOMSON Microelectronics assumes no responsibility for the consequences of use of such information nor for any infringement of patents or other rights of third parties which may result from its use. No license is granted by implication or otherwise under any patent or patent rights of SGS-THOMSON Microelectronics. Specifications mentioned in this publication are subject to change without notice. This publication supersedes and replaces all information previously supplied. SGS-THOMSON Microelectronics products are not authorized for use as critical components in life support devices or systems without express written approval of SGS-THOMSON Microelectronics.

© 1994 SGS-THOMSON Microelectronics - All Rights Reserved

SGS-THOMSON Microelectronics GROUP OF COMPANIES
Australia - Brazil - France - Germany - Hong Kong - Italy - Japan - Korea - Malaysia - Malta - Morocco - The Netherlands - Singapore - Spain - Sweden - Switzerland - Taiwan - Thaliand - United Kingdom - U.S.A.

SGS-THOMSON MICROELECTRONICS

L297
L297D

STEPPER MOTOR CONTROLLERS

- NORMAL/WAWE DRIVE
- HALF/FULL STEP MODES
- CLOCKWISE/ANTICLOCKWISE DIRECTION
- SWITCHMODE LOAD CURRENT REGULATION
- PROGRAMMABLE LOAD CURRENT
- FEW EXTERNAL COMPONENTS
- RESET INPUT & HOME OUTPUT
- ENABLE INPUT

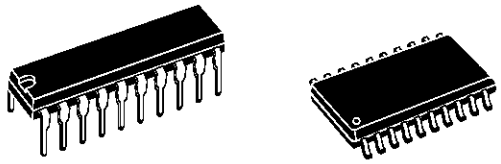

DIP20 SO20

ORDERING NUMBERS : L297 (DIP20)
L297D (SO20)

DESCRIPTION

The L297/A/D Stepper Motor Controller IC generates four phase drive signals for two phase bipolar and four phase unipolar step motors in microcomputer-controlled applications. The motor can be driven in half step, normal and wawe drive modes and on-chip PWM chopper circuits permit switchmode control of the current in the windings. A feature of this device is that it requires only clock, direction and mode input signals. Since the phase are generated internally the burden on the microprocessor, and the programmer, is greatly reduced. Mounted in DIP20 and SO20 packages, the L297 can be used with monolithic bridge drives such as the L298N or L293E, or with discrete transistors and darlingtons.

ABSOLUTE MAXIMUM RATINGS

Symbol	Parameter	Value	Unit
V_s	Supply voltage	10	V
V_i	Input signals	7	V
P_{tot}	Total power dissipation (T_{amb} = 70°C)	1	W
T_{stg}, T_j	Storage and junction temperature	-40 to + 150	°C

TWO PHASE BIPOLAR STEPPER MOTOR CONTROL CIRCUIT

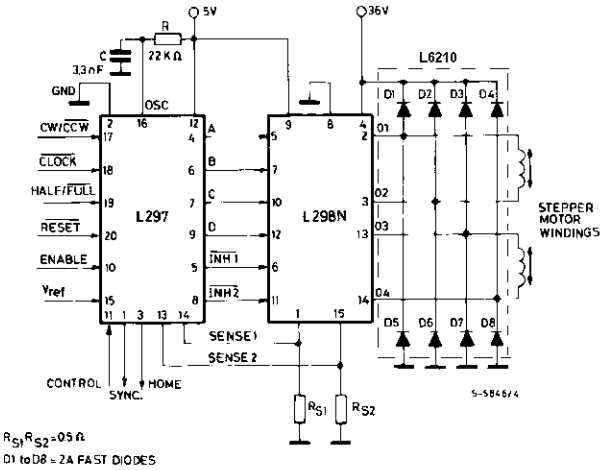

PIN CONNECTION (Top view)

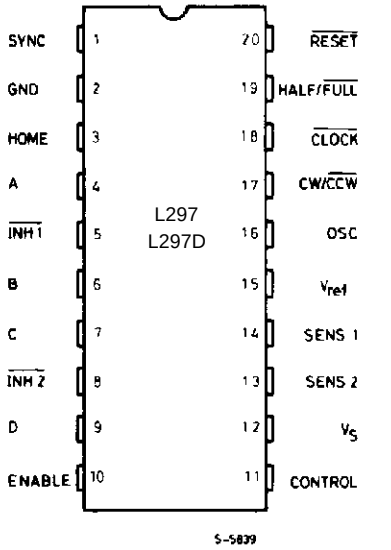

BLOCK DIAGRAM (L297/L297D)

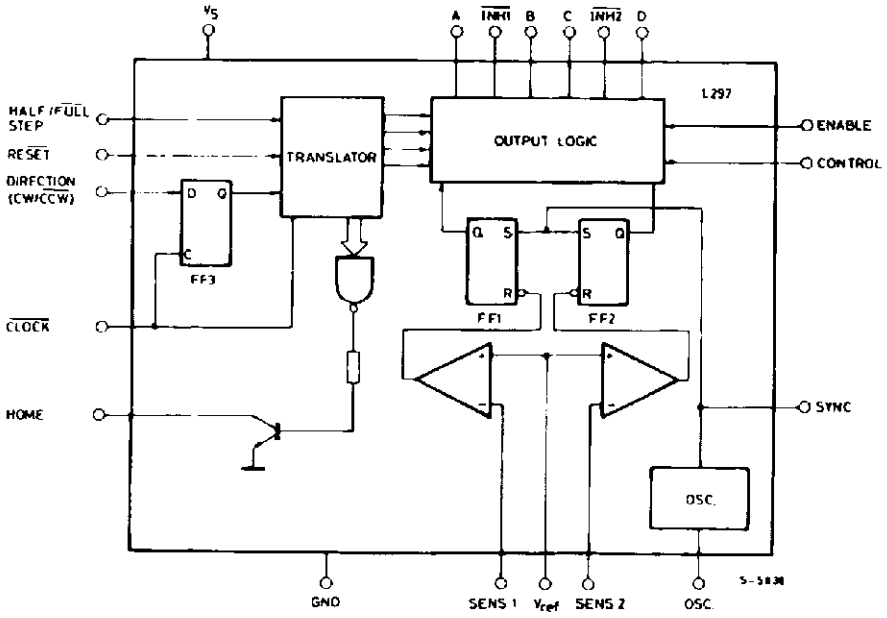

PIN FUNCTIONS - L297/L297D

N°	NAME	FUNCTION
1	SYNC	Output of the on-chip chopper oscillator. The SYNC connections The SYNC connections of all L297s to be synchronized are connected together and the oscillator components are omitted on all but one. If an external clock source is used it is injected at this terminal.
2	GND	Ground connection.
3	HOME	Open collector output that indicates when the L297 is in its initial state (ABCD = 0101). The transistor is open when this signal is active.
4	A	Motor phase A drive signal for power stage.
5	$\overline{INH1}$	Active low inhibit control for driver stage of A and B phases. When a bipolar bridge is used this signal can be used to ensure fast decay of load current when a winding is de-energized. Also used by chopper to regulate load current if CONTROL input is low.
6	B	Motor phase B drive signal for power stage.
7	C	Motor phase C drive signal for power stage.
8	$\overline{INH2}$	Active low inhibit control for drive stages of C and D phases. Same functions as INH1.
9	D	Motor phase D drive signal for power stage.
10	ENABLE	Chip enable input. When low (inactive) INH1, INH2, A, B, C and D are brought low.
11	CONTROL	Control input that defines action of chopper. When low chopper acts on INH1 and INH2; when high chopper acts on phase lines ABCD.
12	V_s	5V supply input.
13	$SENS_2$	Input for load current sense voltage from power stages of phases C and D.
14	$SENS_1$	Input for load current sense voltage from power stages of phases A and B.
15	V_{ref}	Reference voltage for chopper circuit. A voltage applied to this pin determines the peak load current.
16	OSC	An RC network (R to V_{CC}, C to ground) connected to this terminal determines the chopper rate. This terminal is connected to ground on all but one device in synchronized multi - L297 configurations. f $\cong$ 1/0.69 RC
17	CW/$\overline{CCW}$	Clockwise/counterclockwise direction control input. Physical direction of motor rotation also depends on connection of windings. Synchronized internally therefore direction can be changed at any time.
18	$\overline{CLOCK}$	Step clock. An active low pulse on this input advances the motor one increment. The step occurs on the rising edge of this signal.

PIN FUNCTIONS - L297/L297D (continued)

N°	NAME	FUNCTION
19	HALF/$\overline{\text{FULL}}$	Half/full step select input. When high selects half step operation, when low selects full step operation. One-phase-on full step mode is obtained by selecting FULL when the L297's translator is at an even-numbered state. Two-phase-on full step mode is set by selecting FULL when the translator is at an odd numbered position. (The home position is designate state 1).
20	$\overline{\text{RESET}}$	Reset input. An active low pulse on this input restores the translator to the home position (state 1, ABCD = 0101).

THERMAL DATA

Symbol	Parameter		DIP20	SO20	Unit
$R_{th\text{-}j\text{-}amb}$	Thermal resistance junction-ambient	max	80	100	°C/W

CIRCUIT OPERATION

The L297 is intended for use with a dual bridge driver, quad darlington array or discrete power devices in step motor driving applications. It receives step clock, direction and mode signals from the systems controller (usually a microcomputer chip) and generates control signals for the power stage.

The principal functions are a translator, which generates the motor phase sequences, and a dual PWM chopper circuit which regulates the current in the motor windings. The translator generates three different sequences, selected by the HALF/FULL input. These are normal (two phases energised), wave drive (one phase energised) and half-step (alternately one phase energised/two phases energised). Two inhibit signals are also generated by the L297 in half step and wave drive modes. These signals, which connect directly to the L298's enable inputs, are intended to speed current decay when a winding is de-energised. When the L297 is used to drive a unipolar motor the chopper acts on these lines.

An input called CONTROL determines whether the chopper will act on the phase lines ABCD or the inhibit lines INH1 and INH2. When the phase lines are chopped the non-active phase line of each pair (AB or CD) is activated (rather than interrupting the line then active). In L297 + L298 configurations this technique reduces dissipation in the load current sense resistors.

A common on-chip oscillator drives the dual chopper. It supplies pulses at the chopper rate which set the two flip-flops FF1 and FF2. When the current in a winding reaches the programmed peak value the voltage across the sense resistor (connected to one of the sense inputs $SENS_1$ or $SENS_2$) equals V_{ref} and the corresponding comparator resets its flip flop, interrupting the drive current until the next oscillator pulse arrives. The peak current for both windings is programmed by a voltage divider on the V_{ref} input.

Ground noise problems in multiple configurations can be avoided by synchronising the chopper oscillators. This is done by connecting all the SYNC pins together, mounting the oscillator RC network on one device only and grounding the OSC pin on all other devices.

MOTOR DRIVING PHASE SEQUENCES

The L297's translator generates phase sequences for normal drive, wave drive and half step modes. The state sequences and output waveforms for these three modes are shown below. In all cases the translator advances on the low to high transistion of $\overline{CLOCK}$.

Clockwise rotation is indicate; for anticlockwise rotation the sequences are simply reversed $\overline{RESET}$ restores the translator to state 1, where ABCD = 0101.

HALF STEP MODE

Half step mode is selected by a high level on the HALF/$\overline{FULL}$ input.

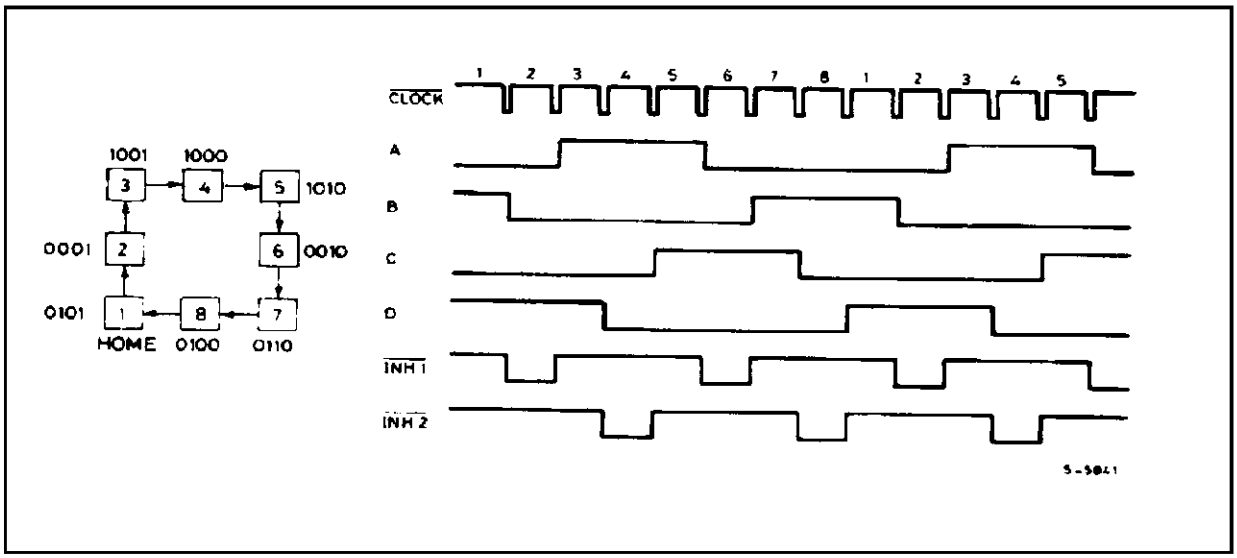

NORMAL DRIVE MODE

Normal drive mode (also called "two-phase-on" drive) is selected by a low level on the HALF/$\overline{FULL}$ input when the translator is at an odd numbered state (1, 3, 5 or 7). In this mode the $\overline{INH1}$ and $\overline{INH2}$ outputs remain high throughout.

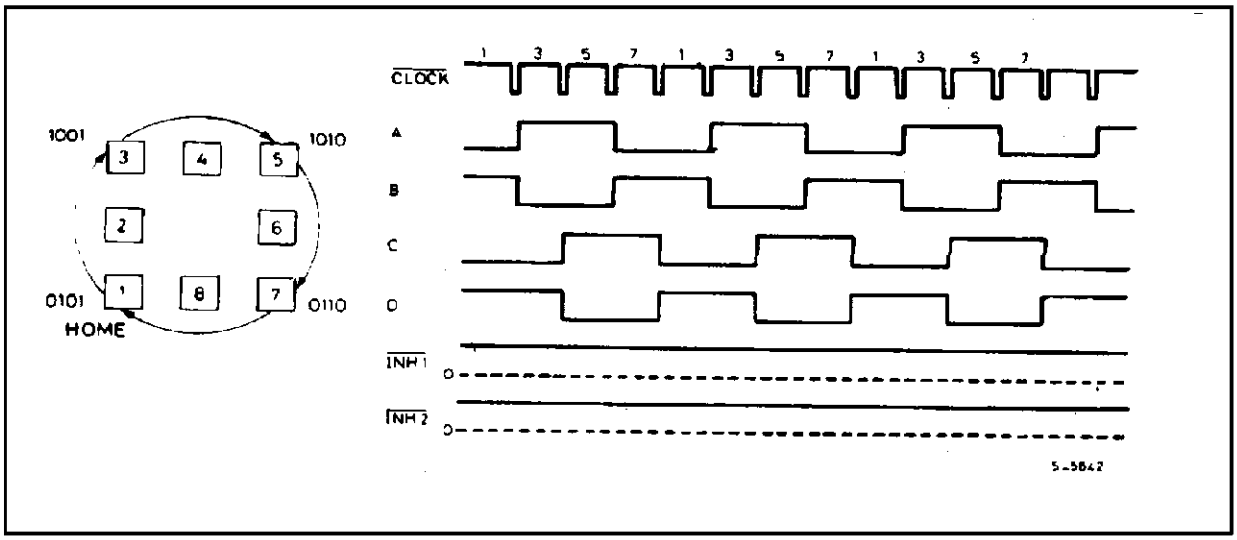

MOTOR DRIVING PHASE SEQUENCES (continued)

WAVE DRIVE MODE

Wave drive mode (also called "one-phase-on" drive) is selected by a low level on the HALF/$\overline{FULL}$ input when the translator is at an even numbered state (2, 4, 6 or 8).

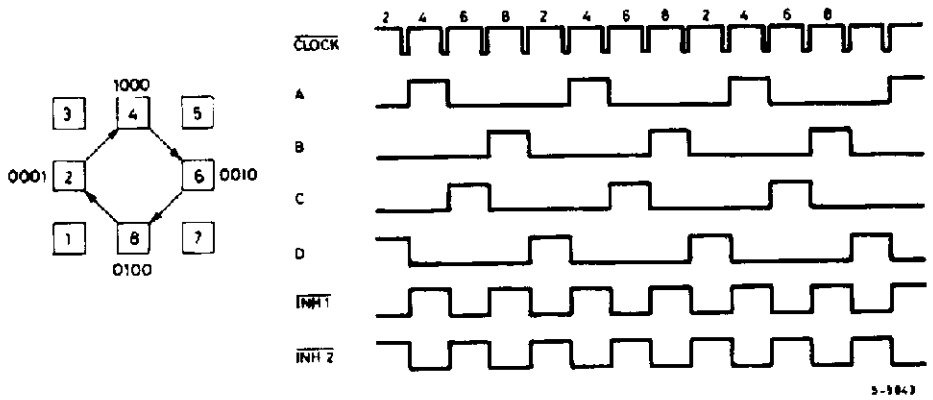

ELECTRICAL CHARACTERISTICS (Refer to the block diagram T_{amb} = 25°C, V_S = 5V unless otherwise specified)

Symbol	Parameter	Test conditions		Min.	Typ	Max.	Unit
V_s	Supply voltage (pin 12)			4.75		7	V
I_s	Quiescent supply current (pin 12)	Outputs floating			50	80	mA
V_i	Input voltage (pin 11, 17, 18, 19, 20)		Low			0.6	V
			High	2		V_s	V
I_i	Input current (pin 11, 17, 18, 19, 20)		V_i = L		100	µA	
			V_i = H			10	µA
V_{en}	Enable input voltage (pin 10)		Low			1.3	V
			High	2		V_s	V
I_{en}	Enable input current (pin 10)		V_{en} = L			100	µA
			V_{en} = H			10	µA
V_o	Phase output voltage (pins 4, 6, 7, 9)	I_o = 10mA	V_{OL}			0.4	V
		I_o = 5mA	V_{OH}	3.9			V
V_{inh}	Inhibit output voltage (pins 5, 8)	I_o = 10mA	$V_{inh\ L}$			0.4	V
		I_o = 5mA	$V_{inh\ H}$	3.9			V
V_{SYNC}	Sync Output Voltage	I_o = 5mA	$V_{SYNC\ H}$	3.3			V
		I_o = 5mA	$V_{SYNC\ V}$			0.8	

ELECTRICAL CHARACTERISTICS (continued)

Symbol	Parameter	Test conditions	Min.	Typ	Max.	Unit
I_{leak}	Leakage current (pin 3)	V_{CE} = 7 V			1	µA
V_{sat}	Saturation voltage (pin 3)	I = 5 mA			0.4	V
V_{off}	Comparators offset voltage (pins 13, 14, 15)	V_{ref} = 1 V			5	mV
I_o	Comparator bias current (pins 13, 14, 15)		-100		10	µA
V_{ref}	Input reference voltage (pin 15)		0		3	V
t_{CLK}	Clock time		0.5			µs
t_S	Set up time		1			µs
t_H	Hold time		4			µs
t_R	Reset time		1			µs
t_{RCLK}	Reset to clock delay		1			µs

Figure 1.

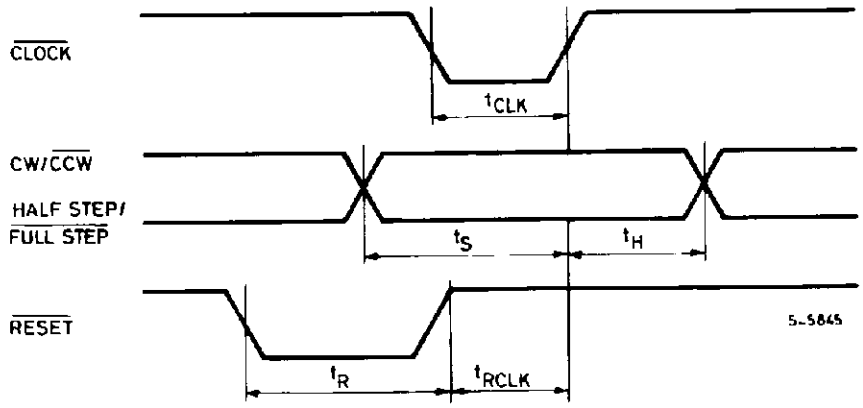

APPLICATION INFORMATION

TWO PHASE BIPOLAR STEPPER MOTOR CONTROL CIRCUIT

This circuit drives bipolar stepper motors with winding currents up to 2A. The diodes are fast 2A types.

Figure 2.

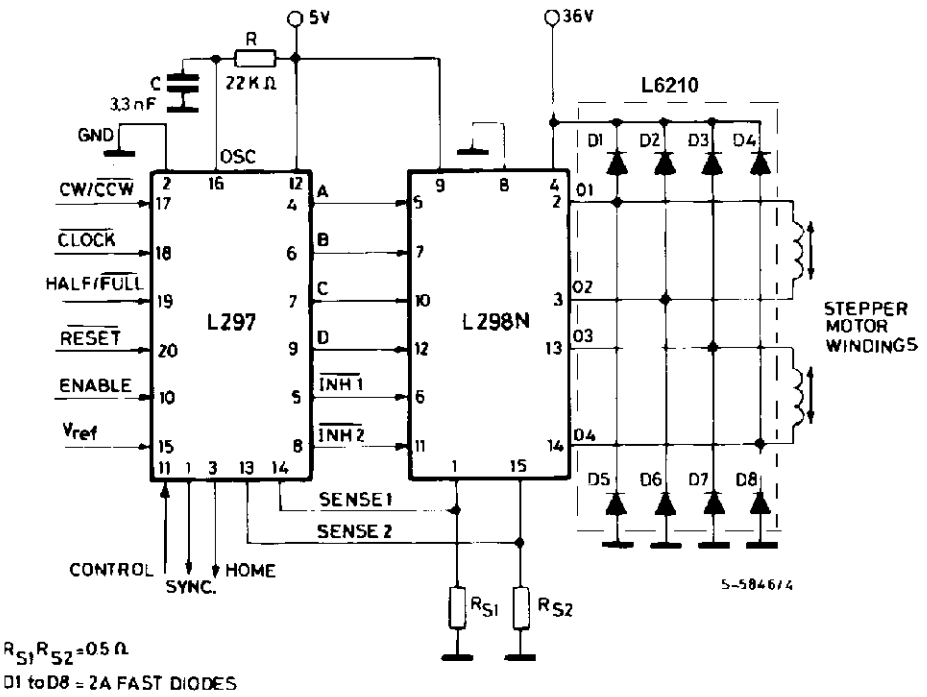

Figure 3 : Synchronising L297s

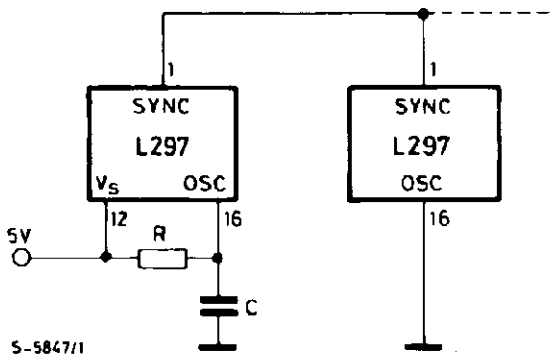

DIP20 PACKAGE MECHANICAL DATA

DIM.	mm			inch		
	MIN.	TYP.	MAX.	MIN.	TYP.	MAX.
a1	0.254			0.010		
B	1.39		1.65	0.055		0.065
b		0.45			0.018	
b1		0.25			0.010	
D			25.4			1.000
E		8.5			0.335	
e		2.54			0.100	
e3		22.86			0.900	
F			7.1			0.280
I			3.93			0.155
L		3.3			0.130	
Z			1.34			0.053

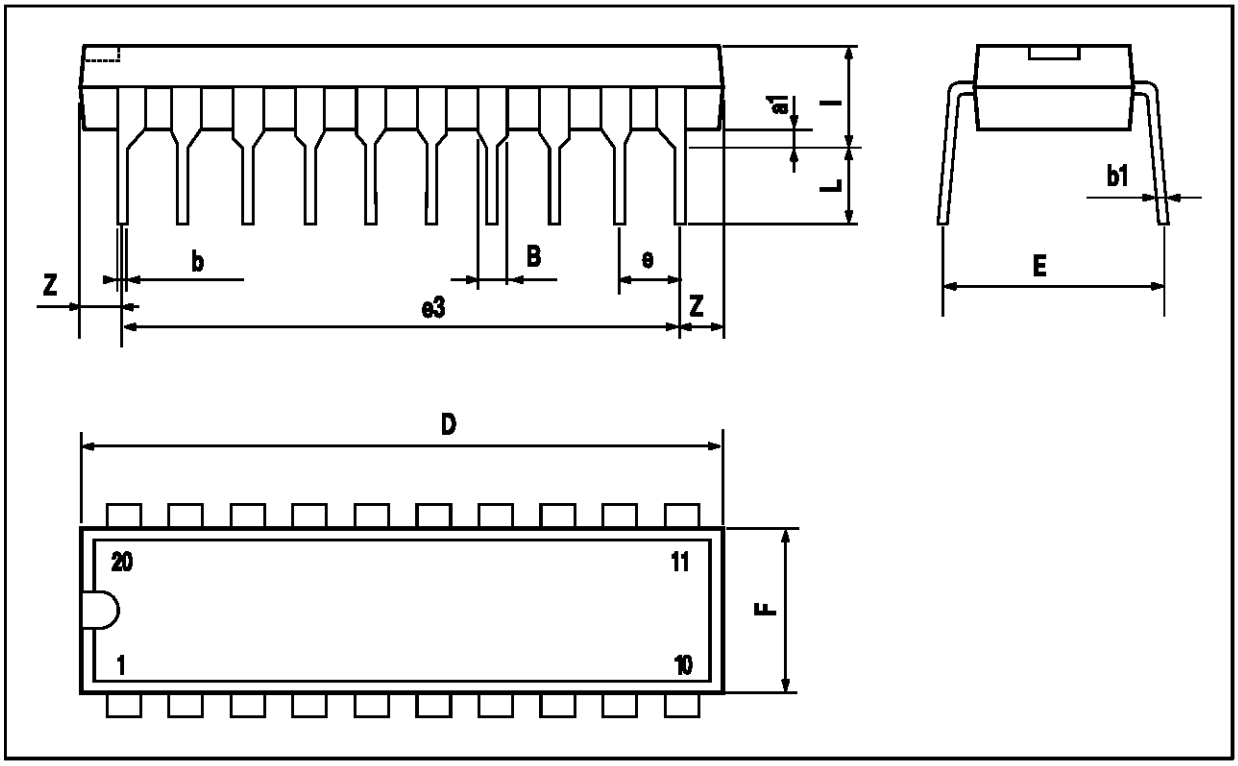

SO20 PACKAGE MECHANICAL DATA

DIM.	mm			inch		
	MIN.	TYP.	MAX.	MIN.	TYP.	MAX.
A			2.65			0.104
a1	0.1		0.3	0.004		0.012
a2			2.45			0.096
b	0.35		0.49	0.014		0.019
b1	0.23		0.32	0.009		0.013
C		0.5			0.020	
c1	45 (typ.)					
D	12.6		13.0	0.496		0.512
E	10		10.65	0.394		0.419
e		1.27			0.050	
e3		11.43			0.450	
F	7.4		7.6	0.291		0.299
L	0.5		1.27	0.020		0.050
M			0.75			0.030
S	8 (max.)					

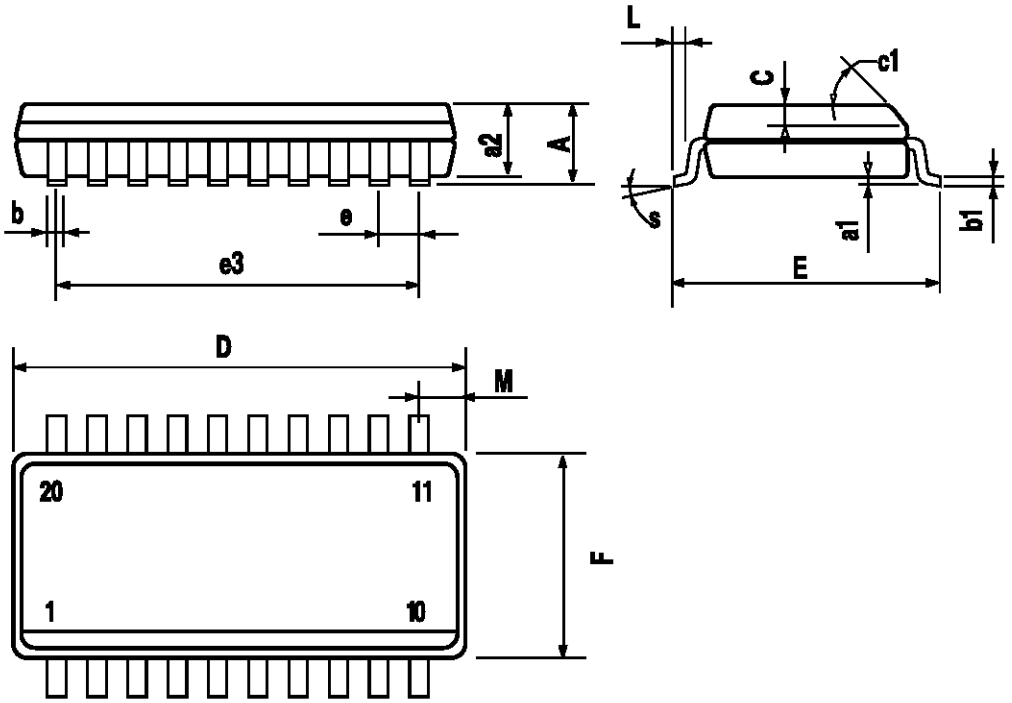

Information furnished is believed to be accurate and reliable. However, SGS-THOMSON Microelectronics assumes no responsibility for the consequences of use of such information nor for any infringement of patents or other rights of third parties which may result from its use. No license is granted by implication or otherwise under any patent or patent rights of SGS-THOMSON Microelectronics. Specification mentioned in this publication are subject to change without notice. This publication supersedes and replaces all information previously supplied. SGS-THOMSON Microelectronics products are not authorized for use as critical components in life support devices or systems without express written approval of SGS-THOMSON Microelectronics.

© 1996 SGS-THOMSON Microelectronics – Printed in Italy – All Rights Reserved

SGS-THOMSON Microelectronics GROUP OF COMPANIES

Australia - Brazil - Canada - China - France - Germany - Hong Kong - Italy - Japan - Korea - Malaysia - Malta - Morocco - The Netherlands - Singapore - Spain - Sweden - Switzerland - Taiwan - Thailand - United Kingdom - U.S.A.

SGS-THOMSON MICROELECTRONICS

L298

DUAL FULL-BRIDGE DRIVER

- OPERATING SUPPLY VOLTAGE UP TO 46 V
- TOTAL DC CURRENT UP TO 4 A
- LOW SATURATION VOLTAGE
- OVERTEMPERATURE PROTECTION
- LOGICAL "0" INPUT VOLTAGE UP TO 1.5 V (HIGH NOISE IMMUNITY)

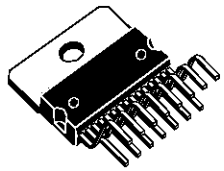

Multiwatt15

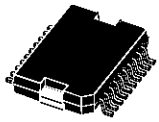

PowerSO20

ORDERING NUMBERS : L298N (Multiwatt Vert.)
L298HN (Multiwatt Horiz.)
L298P (PowerSO20)

DESCRIPTION

The L298 is an integrated monolithic circuit in a 15-lead Multiwatt and PowerSO20 packages. It is a high voltage, high current dual full-bridge driver designed to accept standard TTL logic levels and drive inductive loads such as relays, solenoids, DC and stepping motors. Two enable inputs are provided to enable or disable the device independently of the input signals. The emitters of the lower transistors of each bridge are connected together and the corresponding external terminal can be used for the connection of an external sensing resistor. An additional supply input is provided so that the logic works at a lower voltage.

BLOCK DIAGRAM

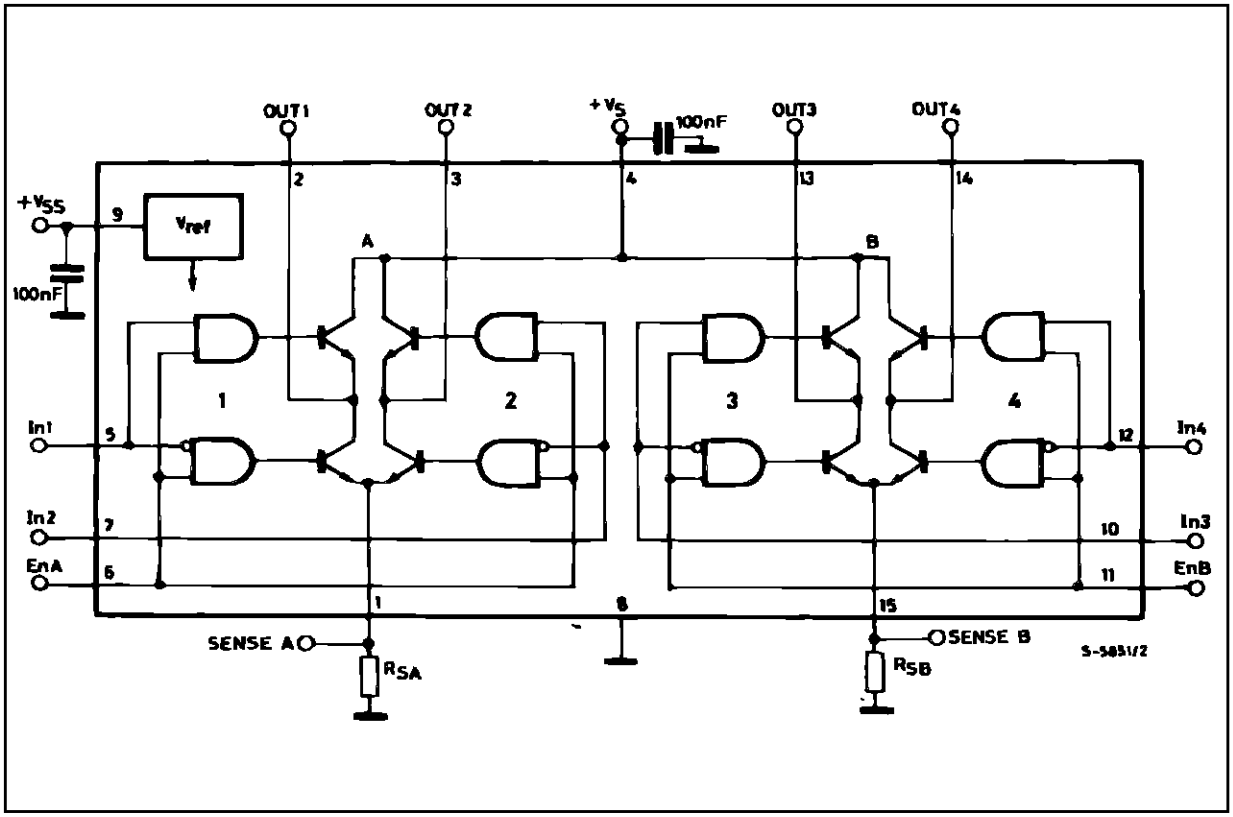

ABSOLUTE MAXIMUM RATINGS

Symbol	Parameter	Value	Unit
V_S	Power Supply	50	V
V_{SS}	Logic Supply Voltage	7	V
V_I, V_{en}	Input and Enable Voltage	–0.3 to 7	V
I_O	Peak Output Current (each Channel) – Non Repetitive (t = 100µs) –Repetitive (80% on –20% off; t_{on} = 10ms) –DC Operation	 3 2.5 2	 A A A
V_{sens}	Sensing Voltage	–1 to 2.3	V
P_{tot}	Total Power Dissipation (T_{case} = 75°C)	25	W
T_{stg}, T_j	Storage and Junction Temperature	–40 to 150	°C

PIN CONNECTIONS (top view)

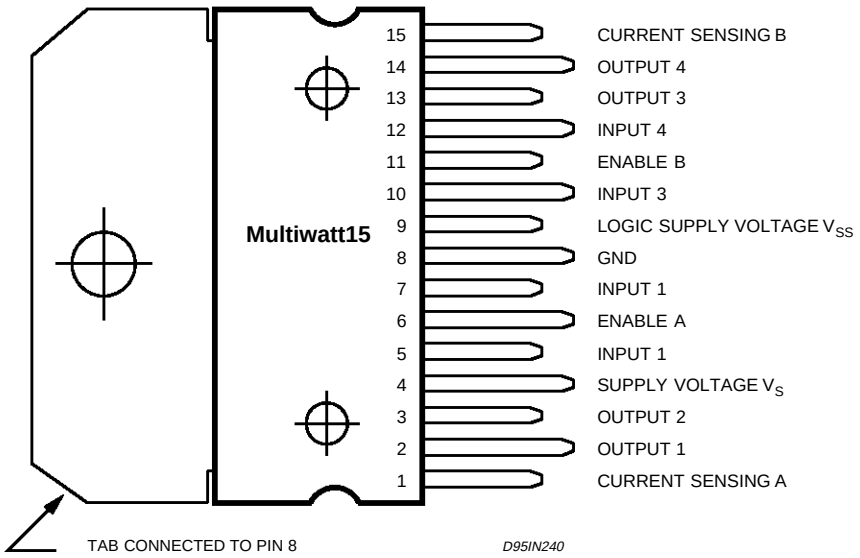

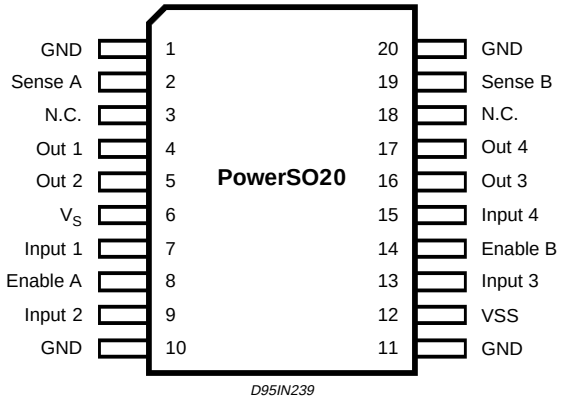

THERMAL DATA

Symbol	Parameter		PowerSO20	Multiwatt15	Unit
$R_{th\ j\text{-}case}$	Thermal Resistance Junction-case	Max.	–	3	°C/W
$R_{th\ j\text{-}amb}$	Thermal Resistance Junction-ambient	Max.	13 (*)	35	°C/W

(*) Mounted on aluminum substrate

PIN FUNCTIONS (refer to the block diagram)

MW.15	PowerSO	Name	Function
1;15	2;19	Sense A; Sense B	Between this pin and ground is connected the sense resistor to control the current of the load.
2;3	4;5	Out 1; Out 2	Outputs of the Bridge A; the current that flows through the load connected between these two pins is monitored at pin 1.
4	6	V_S	Supply Voltage for the Power Output Stages. A non-inductive 100nF capacitor must be connected between this pin and ground.
5;7	7;9	Input 1; Input 2	TTL Compatible Inputs of the Bridge A.
6;11	8;14	Enable A; Enable B	TTL Compatible Enable Input: the L state disables the bridge A (enable A) and/or the bridge B (enable B).
8	1,10,11,20	GND	Ground.
9	12	VSS	Supply Voltage for the Logic Blocks. A100nF capacitor must be connected between this pin and ground.
10; 12	13;15	Input 3; Input 4	TTL Compatible Inputs of the Bridge B.
13; 14	16;17	Out 3; Out 4	Outputs of the Bridge B. The current that flows through the load connected between these two pins is monitored at pin 15.
–	3;18	N.C.	Not Connected

ELECTRICAL CHARACTERISTICS (V_S = 42V; V_{SS} = 5V, T_j = 25°C; unless otherwise specified)

Symbol	Parameter	Test Conditions	Min.	Typ.	Max.	Unit
V_S	Supply Voltage (pin 4)	Operative Condition	V_{IH} +2.5		46	V
V_{SS}	Logic Supply Voltage (pin 9)		4.5	5	7	V
I_S	Quiescent Supply Current (pin 4)	V_{en} = H; I_L = 0 V_i = L V_i = H		13 50	22 70	mA mA
		V_{en} = L V_i = X			4	mA
I_{SS}	Quiescent Current from V_{SS} (pin 9)	V_{en} = H; I_L = 0 V_i = L V_i = H		24 7	36 12	mA mA
		V_{en} = L V_i = X			6	mA
V_{iL}	Input Low Voltage (pins 5, 7, 10, 12)		–0.3		1.5	V
V_{iH}	Input High Voltage (pins 5, 7, 10, 12)		2.3		VSS	V
I_{iL}	Low Voltage Input Current (pins 5, 7, 10, 12)	V_i = L			–10	µA
I_{iH}	High Voltage Input Current (pins 5, 7, 10, 12)	Vi = H ≤ V_{SS} –0.6V		30	100	µA
V_{en} = L	Enable Low Voltage (pins 6, 11)		–0.3		1.5	V
V_{en} = H	Enable High Voltage (pins 6, 11)		2.3		V_{SS}	V
I_{en} = L	Low Voltage Enable Current (pins 6, 11)	V_{en} = L			–10	µA
I_{en} = H	High Voltage Enable Current (pins 6, 11)	V_{en} = H ≤ V_{SS} –0.6V		30	100	µA
$V_{CEsat\,(H)}$	Source Saturation Voltage	I_L = 1A I_L = 2A		1.35 2	1.7 2.7	V V
$V_{CEsat\,(L)}$	Sink Saturation Voltage	I_L = 1A (5) I_L = 2A (5)		1.2 1.7	1.6 2.3	V V
V_{CEsat}	Total Drop	I_L = 1A (5) I_L = 2A (5)			3.2 4.9	V V
V_{sens}	Sensing Voltage (pins 1, 15)		–1 (1)		2	V

ELECTRICAL CHARACTERISTICS (continued)

Symbol	Parameter	Test Conditions	Min.	Typ.	Max.	Unit
T_1 (V_i)	Source Current Turn-off Delay	0.5 V_i to 0.9 I_L (2); (4)		1.5		µs
T_2 (V_i)	Source Current Fall Time	0.9 I_L to 0.1 I_L (2); (4)		0.2		µs
T_3 (V_i)	Source Current Turn-on Delay	0.5 V_i to 0.1 I_L (2); (4)		2		µs
T_4 (V_i)	Source Current Rise Time	0.1 I_L to 0.9 I_L (2); (4)		0.7		µs
T_5 (V_i)	Sink Current Turn-off Delay	0.5 V_i to 0.9 I_L (3); (4)		0.7		µs
T_6 (V_i)	Sink Current Fall Time	0.9 I_L to 0.1 I_L (3); (4)		0.25		µs
T_7 (V_i)	Sink Current Turn-on Delay	0.5 V_i to 0.9 I_L (3); (4)		1.6		µs
T_8 (V_i)	Sink Current Rise Time	0.1 I_L to 0.9 I_L (3); (4)		0.2		µs
fc (V_i)	Commutation Frequency	I_L = 2A		25	40	KHz
T_1 (V_{en})	Source Current Turn-off Delay	0.5 V_{en} to 0.9 I_L (2); (4)		3		µs
T_2 (V_{en})	Source Current Fall Time	0.9 I_L to 0.1 I_L (2); (4)		1		µs
T_3 (V_{en})	Source Current Turn-on Delay	0.5 V_{en} to 0.1 I_L (2); (4)		0.3		µs
T_4 (V_{en})	Source Current Rise Time	0.1 I_L to 0.9 I_L (2); (4)		0.4		µs
T_5 (V_{en})	Sink Current Turn-off Delay	0.5 V_{en} to 0.9 I_L (3); (4)		2.2		µs
T_6 (V_{en})	Sink Current Fall Time	0.9 I_L to 0.1 I_L (3); (4)		0.35		µs
T_7 (V_{en})	Sink Current Turn-on Delay	0.5 V_{en} to 0.9 I_L (3); (4)		0.25		µs
T_8 (V_{en})	Sink Current Rise Time	0.1 I_L to 0.9 I_L (3); (4)		0.1		µs
fc (V_{en})	Commutation Frequency	I_L = 2A		1		KHz

1) 1)Sensing voltage can be –1 V for t ≤ 50 µsec; in steady state V_{sens} min ≥ – 0.5 V.
2) See fig. 2.
3) See fig. 4.
4) The load must be a pure resistor.
5) PIN 1 and PIN 15 connected to GND.

Figure 1 : Typical Saturation Voltage vs. Output Current.

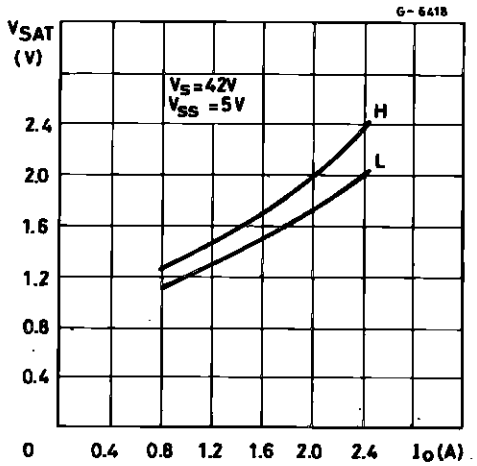

Figure 2 : Switching Times Test Circuits.

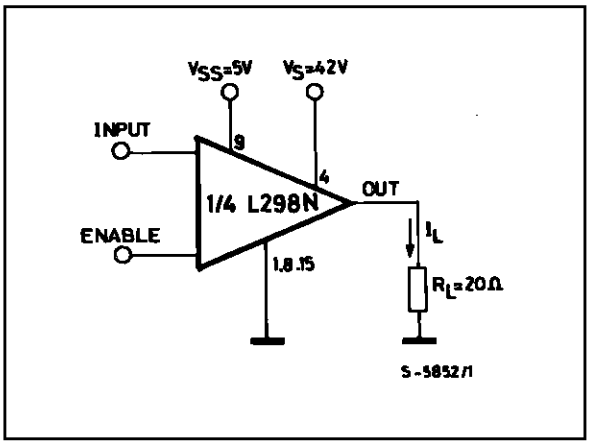

Note : For INPUT Switching, set EN = H
For ENABLE Switching, set IN = H

Figure 3 : Source Current Delay Times vs. Input or Enable Switching.

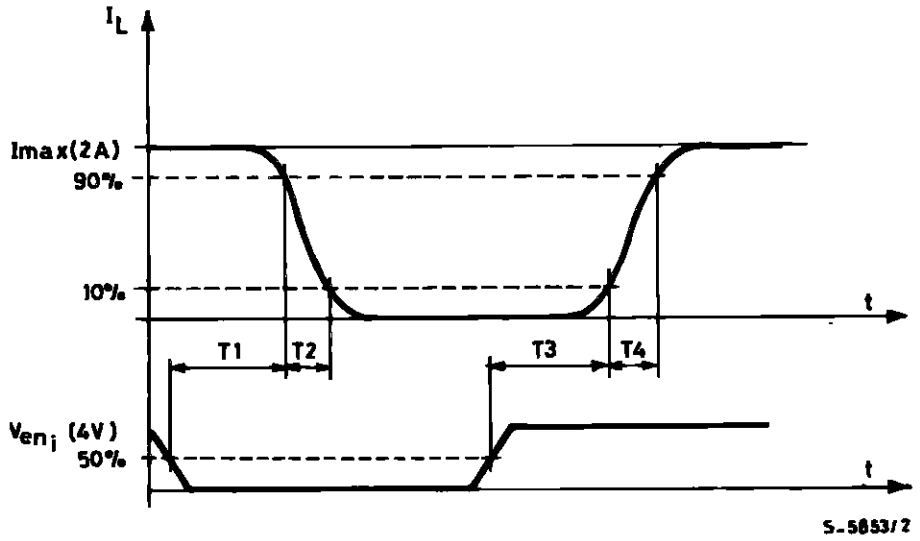

Figure 4 : Switching Times Test Circuits.

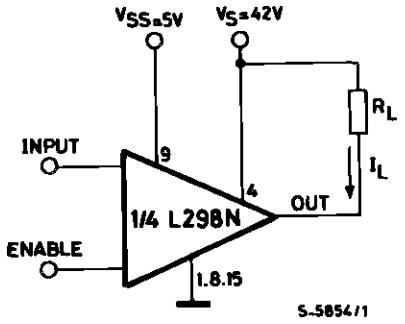

Note : For INPUT Switching, set EN = H
For ENABLE Switching, set IN = L

Figure 5 : Sink Current Delay Times vs. Input 0 V Enable Switching.

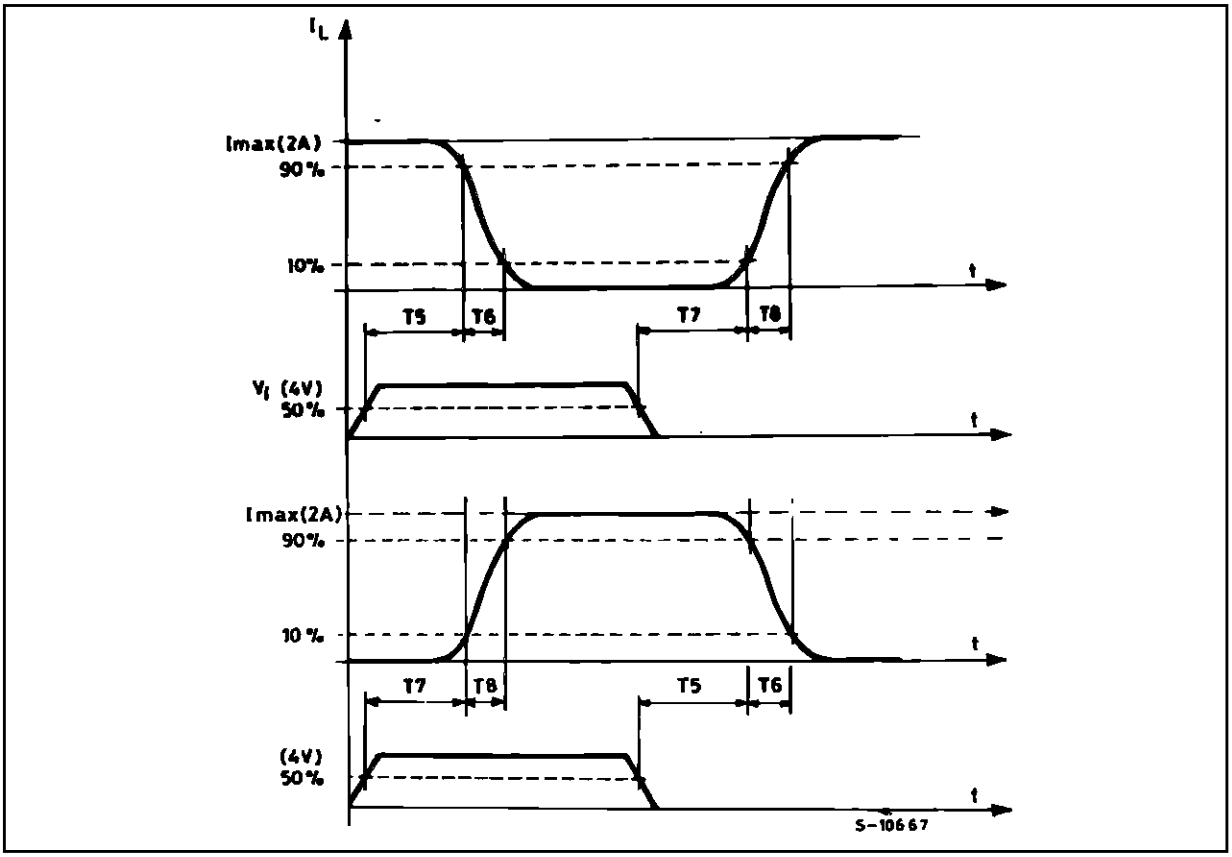

Figure 6 : Bidirectional DC Motor Control.

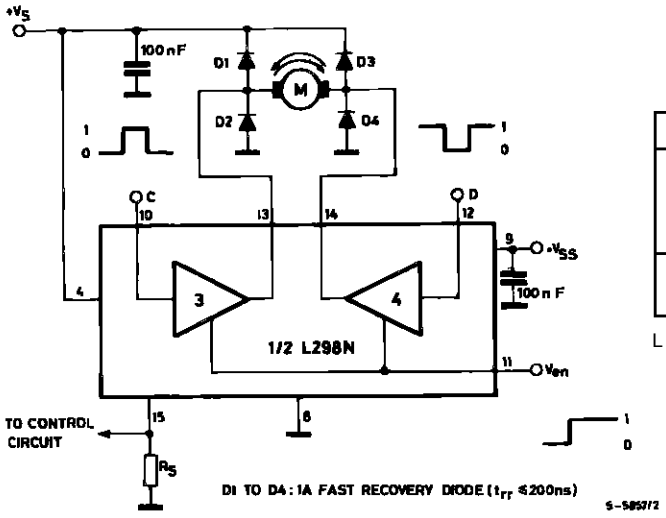

Inputs		Function
V_{en} = H	C = H ; D = L	Turn Right
	C = H ; D = H	Turn Left
	C = D	Fast Motor Stop
V_{en} = L	C = X ; D = C	Free Running Motor Stop

L = Low H = High X = Don't care

Figure 7 : For higher currents, outputs can be paralleled. Take care to parallel channel 1 with channel 4 and channel 2 with channel 3.

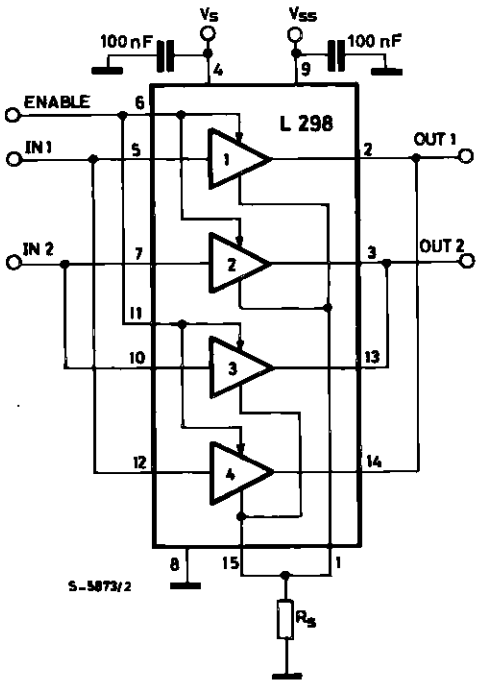

APPLICATION INFORMATION (Refer to the block diagram)

1.1. POWER OUTPUT STAGE

The L298 integrates two power output stages (A ; B). The power output stage is a bridge configuration and its outputs can drive an inductive load in common or differenzial mode, depending on the state of the inputs. The current that flows through the load comes out from the bridge at the sense output : an external resistor (R_{SA} ; R_{SB}.) allows to detect the intensity of this current.

1.2. INPUT STAGE

Each bridge is driven by means of four gates the input of which are In1 ; In2 ; EnA and In3 ; In4 ; EnB. The In inputs set the bridge state when The En input is high ; a low state of the En input inhibits the bridge. All the inputs are TTL compatible.

2. SUGGESTIONS

A non inductive capacitor, usually of 100 nF, must be foreseen between both Vs and Vss, to ground, as near as possible to GND pin. When the large capacitor of the power supply is too far from the IC, a second smaller one must be foreseen near the L298.

The sense resistor, not of a wire wound type, must be grounded near the negative pole of Vs that must be near the GND pin of the I.C.

Each input must be connected to the source of the driving signals by means of a very short path.

Turn-On and Turn-Off : Before to Turn-ON the Supply Voltage and before to Turn it OFF, the Enable input must be driven to the Low state.

3. APPLICATIONS

Fig 6 shows a bidirectional DC motor control Schematic Diagram for which only one bridge is needed. The external bridge of diodes D1 to D4 is made by four fast recovery elements (trr ≤ 200 nsec) that must be chosen of a VF as low as possible at the worst case of the load current.

The sense output voltage can be used to control the current amplitude by chopping the inputs, or to provide overcurrent protection by switching low the enable input.

The brake function (Fast motor stop) requires that the Absolute Maximum Rating of 2 Amps must never be overcome.

When the repetitive peak current needed from the load is higher than 2 Amps, a paralleled configuration can be chosen (See Fig.7).

An external bridge of diodes are required when inductive loads are driven and when the inputs of the IC are chopped ; Shottky diodes would be preferred.

This solution can drive until 3 Amps In DC operation and until 3.5 Amps of a repetitive peak current.

On Fig 8 it is shown the driving of a two phase bipolar stepper motor ; the needed signals to drive the inputs of the L298 are generated, in this example, from the IC L297.

Fig 9 shows an example of P.C.B. designed for the application of Fig 8.

Fig 10 shows a second two phase bipolar stepper motor control circuit where the current is controlled by the I.C. L6506.

Figure 8 : Two Phase Bipolar Stepper Motor Circuit.

This circuit drives bipolar stepper motors with winding currents up to 2 A. The diodes are fast 2 A types.

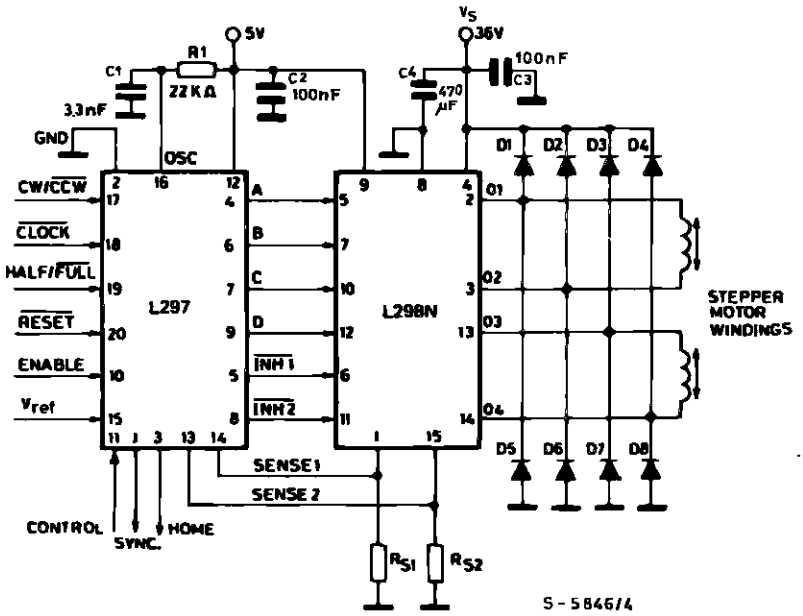

$R_{S1} = R_{S2} = 0.5\ \Omega$

D1 to D8 = 2 A Fast diodes $\begin{cases} V_F \leq 1.2\ V\ @\ I = 2\ A \\ trr \leq 200\ ns \end{cases}$

Figure 9 : Suggested Printed Circuit Board Layout for the Circuit of fig. 8 (1:1 scale).

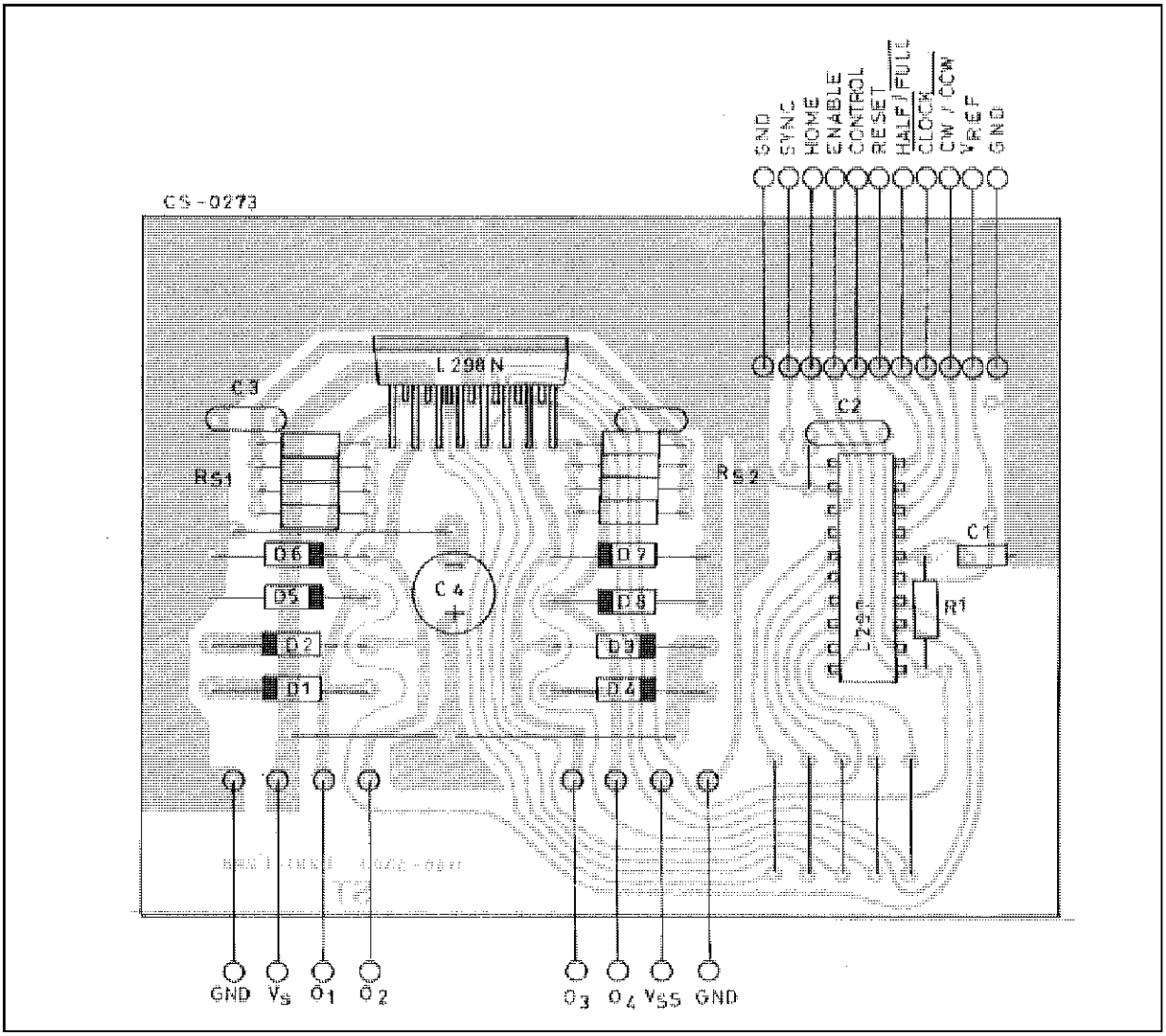

Figure 10 : Two Phase Bipolar Stepper Motor Control Circuit by Using the Current Controller L6506.

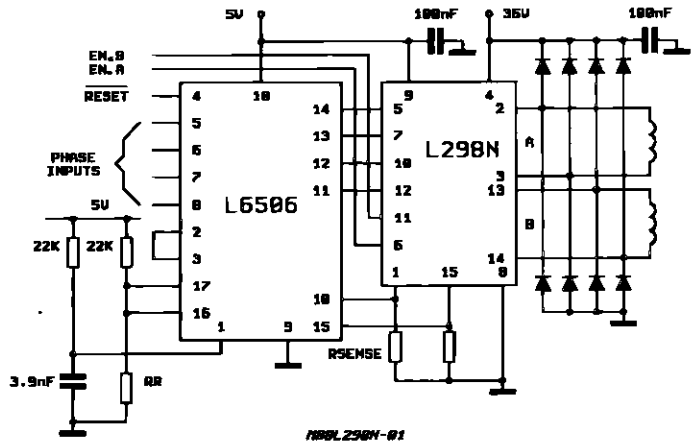

R_R and R_{sense} depend from the load current

MULTIWATT15 (VERTICAL) PACKAGE MECHANICAL DATA

DIM.	mm			inch		
	MIN.	TYP.	MAX.	MIN.	TYP.	MAX.
A			5			0.197
B			2.65			0.104
C			1.6			0.063
D		1			0.039	
E	0.49		0.55	0.019		0.022
F	0.66		0.75	0.026		0.030
G	1.14	1.27	1.4	0.045	0.050	0.055
G1	17.57	17.78	17.91	0.692	0.700	0.705
H1	19.6			0.772		
H2			20.2			0.795
L	22.1		22.6	0.870		0.890
L1	22		22.5	0.866		0.886
L2	17.65		18.1	0.695		0.713
L3	17.25	17.5	17.75	0.679	0.689	0.699
L4	10.3	10.7	10.9	0.406	0.421	0.429
L7	2.65		2.9	0.104		0.114
M	4.2	4.3	4.6	0.165	0.169	0.181
M1	4.5	5.08	5.3	0.177	0.200	0.209
S	1.9		2.6	0.075		0.102
S1	1.9		2.6	0.075		0.102
Dia1	3.65		3.85	0.144		0.152

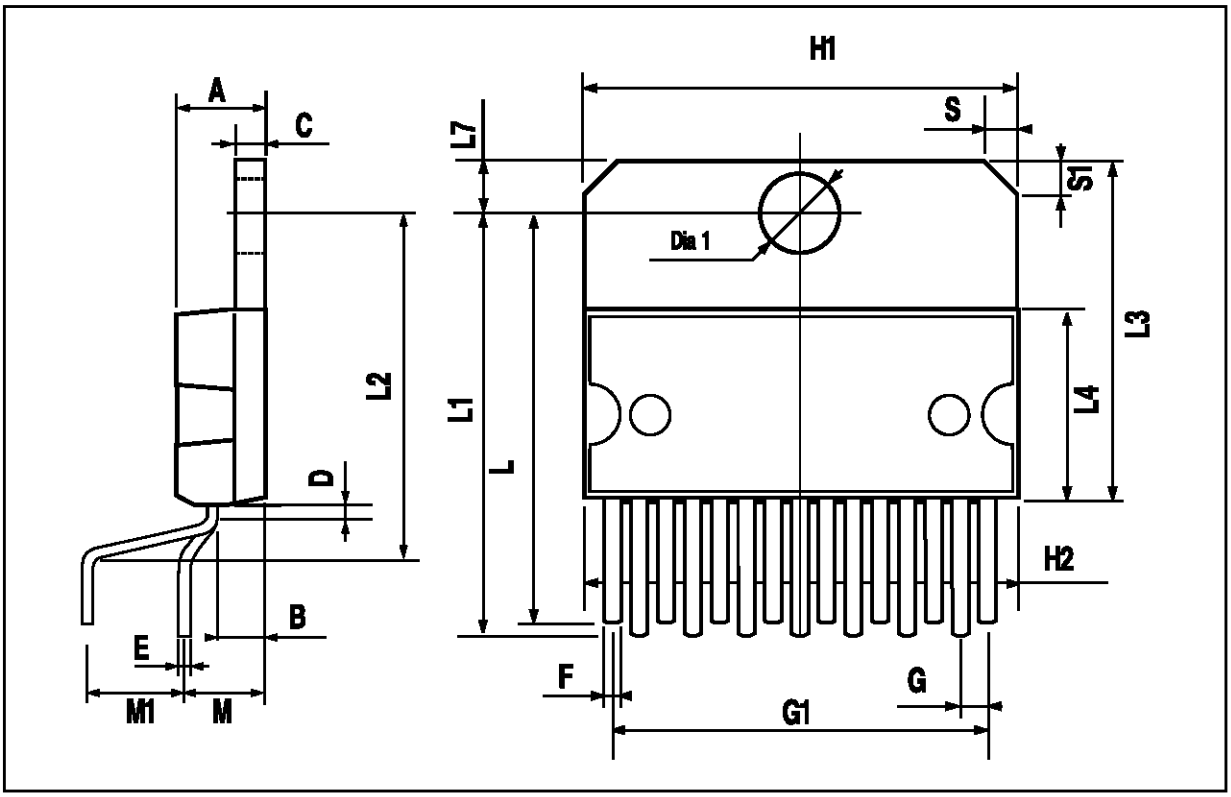

PowerSO20 PACKAGE MECHANICAL DATA

DIM.	mm			inch		
	MIN.	TYP.	MAX.	MIN.	TYP.	MAX.
A			3.60			0.1417
a1	0.10		0.30	0.0039		0.0118
a2			3.30			0.1299
a3	0		0.10	0		0.0039
b	0.40		0.53	0.0157		0.0209
c	0.23		0.32	0.009		0.0126
D (1)	15.80		16.00	0.6220		0.6299
E	13.90		14.50	0.5472		0.570
e		1.27			0.050	
e3		11.43			0.450	
E1 (1)	10.90		11.10	0.4291		0.437
E2			2.90			0.1141
G	0		0.10	0		0.0039
h			1.10			
L	0.80		1.10	0.0314		0.0433
N	10° (max.)					
S	8° (max.)					
T		10.0			0.3937	

(1) "D and E1" do not include mold flash or protrusions
- Mold flash or protrusions shall not exceed 0.15mm (0.006")

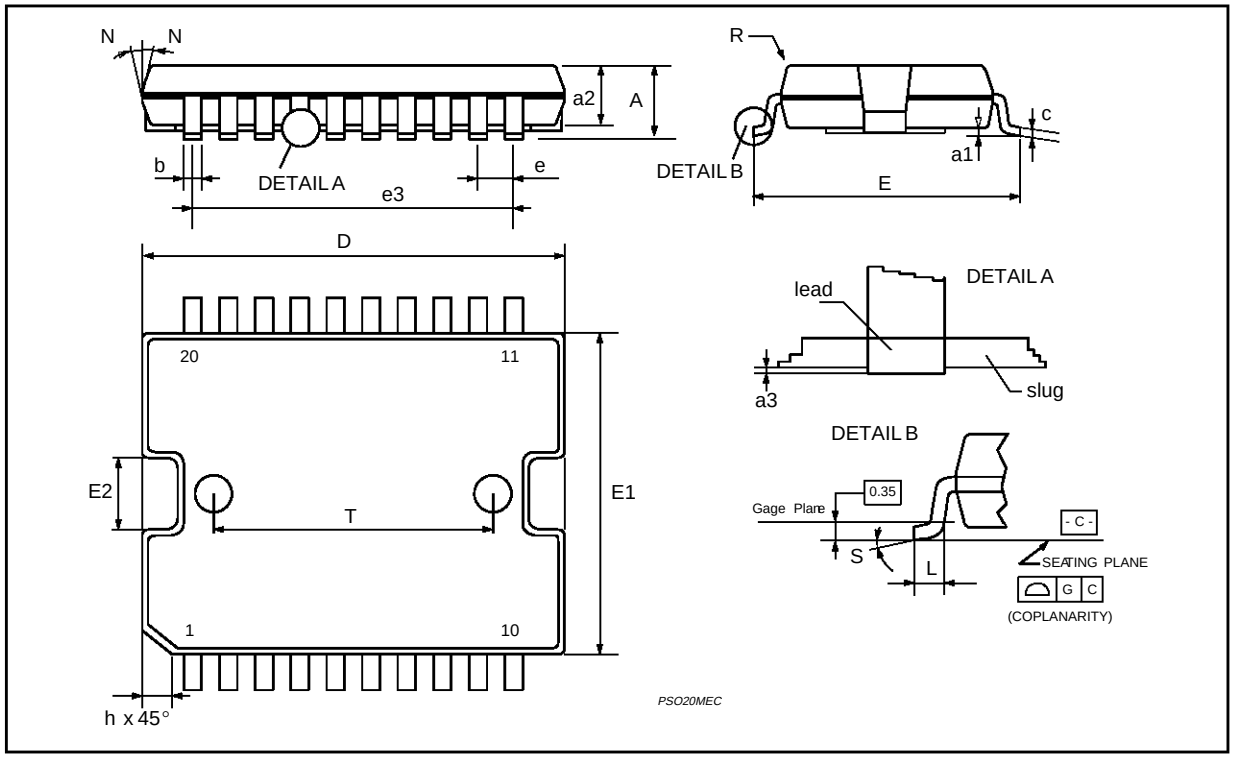

Information furnished is believed to be accurate and reliable. However, SGS-THOMSON Microelectronics assumes no responsibility for the consequences of use of such information nor for any infringement of patents or other rights of third parties which may result from its use. No license is granted by implication or otherwise under any patent or patent rights of SGS-THOMSON Microelectronics. Specifications mentioned in this publication are subject to change without notice. This publication supersedes and replaces all information previously supplied. SGS-THOMSON Microelectronics products are not authorized for use as critical components in life support devices or systems without express written approval of SGS-THOMSON Microelectronics.

© 1995 SGS-THOMSON Microelectronics - All Rights Reserved

SGS-THOMSON Microelectronics GROUP OF COMPANIES
Australia - Brazil - France - Germany - Hong Kong - Italy - Japan - Korea - Malaysia - Malta - Morocco - The Netherlands - Singapore - Spain - Sweden - Switzerland - Taiwan - Thaliand - United Kingdom - U.S.A.

SGS-THOMSON MICROELECTRONICS

L6201 - L6201P
L6202 - L6203

DMOS FULL BRIDGE DRIVER

- SUPPLY VOLTAGE UP TO 48V
- 5A MAX PEAK CURRENT (2A max. for L6201)
- TOTAL RMS CURRENT UP TO L6201: 1A; L6202: 1.5A; L6203/L6201P: 4A
- $R_{DS\ (ON)}$ 0.3 Ω (typical value at 25 °C)
- CROSS CONDUCTION PROTECTION
- TTL COMPATIBLE DRIVE
- OPERATING FREQUENCY UP TO 100 KHz
- THERMAL SHUTDOWN
- INTERNAL LOGIC SUPPLY
- HIGH EFFICIENCY

MULTIPOWER BCD TECHNOLOGY

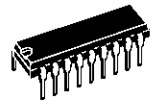

Powerdip 12+3+3

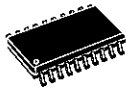

SO20 (12+4+4)

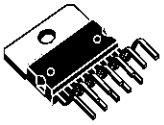

Multiwatt11

PowerSO20

ORDERING NUMBERS:
L6201 (SO20)
L6201P (PowerSO20)
L6202 (Powerdip18)
L6203 (Multiwatt)

DESCRIPTION

The I.C. is a full bridge driver for motor control applications realized in Multipower-BCD technology which combines isolated DMOS power transistors with CMOS and Bipolar circuits on the same chip. By using mixed technology it has been possible to optimize the logic circuitry and the power stage to achieve the best possible performance. The DMOS output transistors can operate at supply voltages up to 42V and efficiently at high switching speeds. All the logic inputs are TTL, CMOS and µC compatible. Each channel (half-bridge) of the device is controlled by a separate logic input, while a common enable controls both channels. The I.C. is mounted in three different packages.

BLOCK DIAGRAM

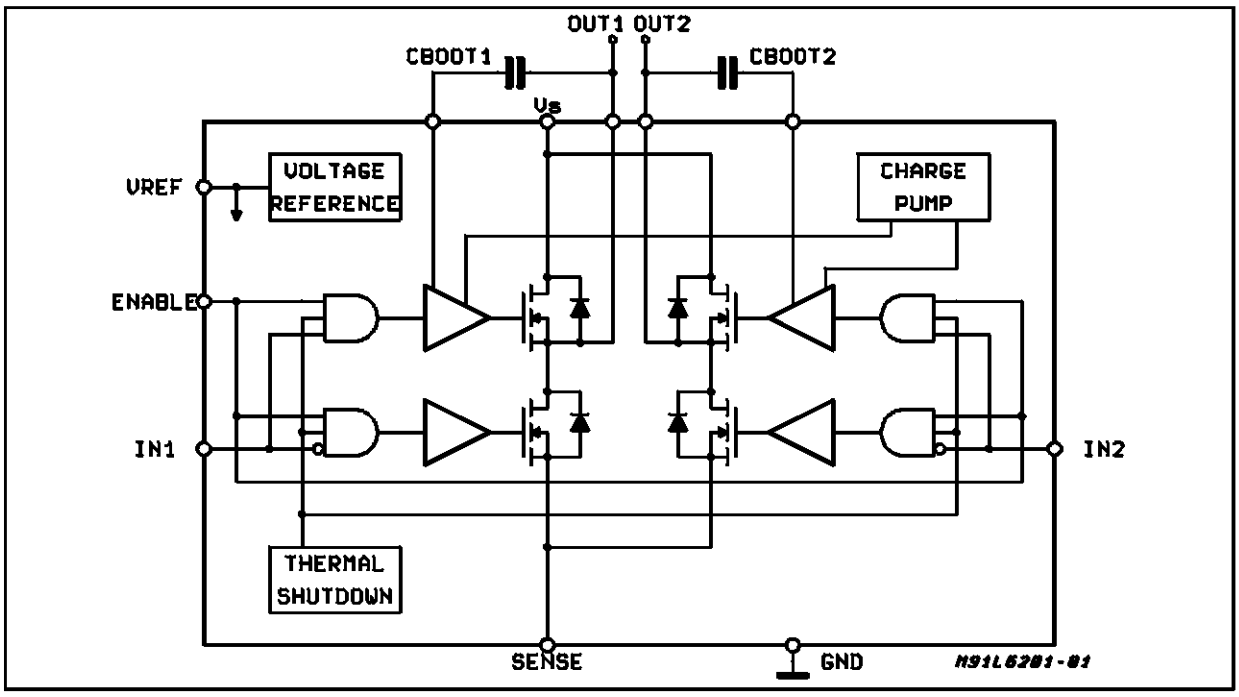

PIN CONNECTIONS (Top view)

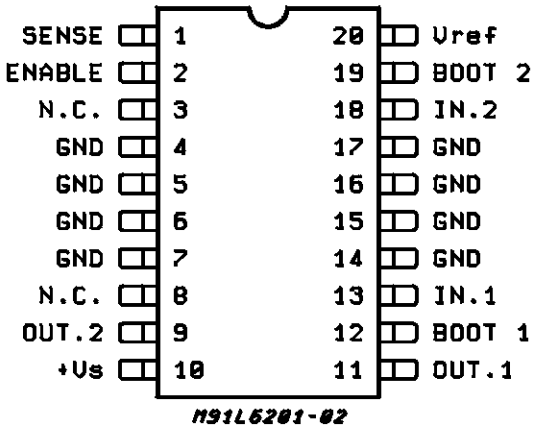

SO20

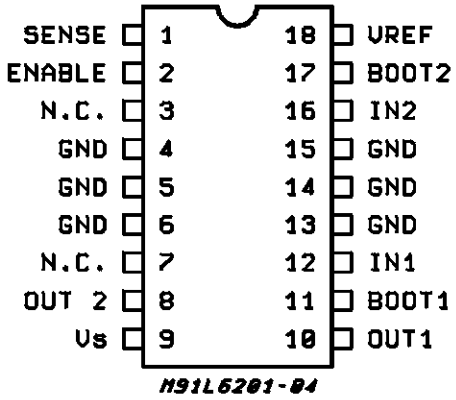

POWERDIP

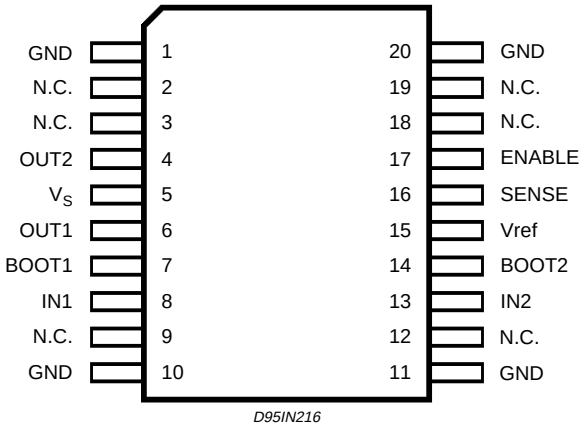

PowerSO20

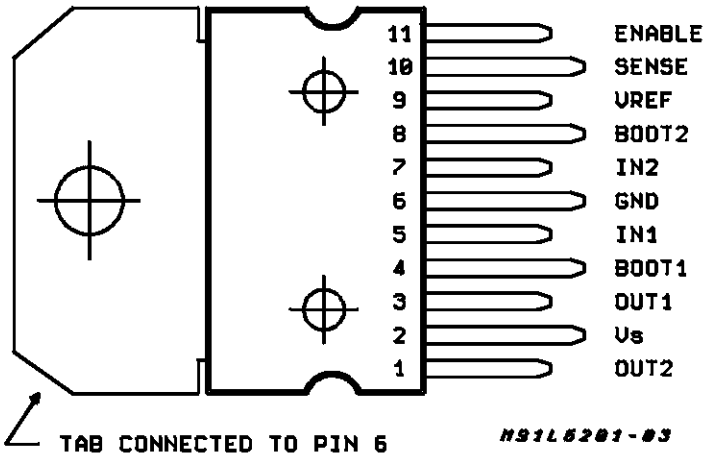

MULTIWATT11

PINS FUNCTIONS

Device				Name	Function
L6201	L6201P	L6202	L6203		
1	16	1	10	SENSE	A resistor R_{sense} connected to this pin provides feedback for motor current control.
2	17	2	11	ENABLE	When a logic high is present on this pin the DMOS POWER transistors are enabled to be selectively driven by IN1 and IN2.
3	2,3,9,12, 18,19	3		N.C.	Not Connected
4,5	–	4	6	GND	Common Ground Terminal
–	1, 10	5		GND	Common Ground Terminal
6,7	–	6		GND	Common Ground Terminal
8	–	7		N.C.	Not Connected
9	4	8	1	OUT2	Ouput of 2nd Half Bridge
10	5	9	2	V_s	Supply Voltage
11	6	10	3	OUT1	Output of first Half Bridge
12	7	11	4	BOOT1	A boostrap capacitor connected to this pin ensures efficient driving of the upper POWER DMOS transistor.
13	8	12	5	IN1	Digital Input from the Motor Controller
14,15	–	13	6	GND	Common Ground Terminal
–	11, 20	14		GND	Common Ground Terminal
16,17	–	15		GND	Common Ground Terminal
18	13	16	7	IN2	Digital Input from the Motor Controller
19	14	17	8	BOOT2	A boostrap capacitor connected to this pin ensures efficient driving of the upper POWER DMOS transistor.
20	15	18	9	V_{ref}	Internal voltage reference. A capacitor from this pin to GND is recommended. The internal Ref. Voltage can source out a current of 2mA max.

ABSOLUTE MAXIMUM RATINGS

Symbol	Parameter	Value	Unit
V_s	Power Supply	52	V
V_{OD}	Differential Output Voltage (between Out1 and Out2)	60	V
V_{IN}, V_{EN}	Input or Enable Voltage	– 0.3 to + 7	V
I_o	Pulsed Output Current for L6201P/L6202/L6203 (Note 1) – Non Repetitive (< 1 ms) for L6201 for L6201P/L6202/L6203 DC Output Current for L6201 (Note 1)	5 5 10 1	A A A A
V_{sense}	Sensing Voltage	– 1 to + 4	V
V_b	Boostrap Peak Voltage	60	V
P_{tot}	Total Power Dissipation: T_{pins} = 90°C for L6201 for L6202 T_{case} = 90°C for L6201P/L6203 T_{amb} = 70°C for L6201 (Note 2) for L6202 (Note 2) for L6201P/L6203 (Note 2)	 4 5 20 0.9 1.3 2.3	 W W W W W W
T_{stg}, T_j	Storage and Junction Temperature	– 40 to + 150	°C

Note 1: Pulse width limited only by junction temperature and transient thermal impedance (see thermal characteristics)
Note 2: Mounted on board with minimized dissipating copper area.

THERMAL DATA

Symbol	Parameter		Value				Unit
			L6201	L6201P	L6202	L6203	
$Rt_{h\ j\text{-}pins}$	Thermal Resistance Junction-pins	max	15	–	12	–	°C/W
$Rt_{h\ j\text{-}case}$	Thermal Resistance Junction Case	max.	–	–	–	3	
$Rt_{h\ j\text{-}amb}$	Thermal Resistance Junction-ambient	max.	85	13 (*)	60	35	

(*) Mounted on aluminium substrate.

ELECTRICAL CHARACTERISTICS (Refer to the Test Circuits; T_j = 25°C, V_S = 42V, V_{sens} = 0, unless otherwise specified).

Symbol	Parameter	Test Conditions	Min.	Typ.	Max.	Unit
V_s	Supply Voltage		12	36	48	V
V_{ref}	Reference Voltage	I_{REF} = 2mA		13.5		V
I_{REF}	Output Current				2	mA
I_s	Quiescent Supply Current	EN = H V_{IN} = L EN = H V_{IN} = H I_L = 0 EN = L (Fig. 1,2,3)		10 10 8	15 15 15	mA mA mA
f_c	Commutation Frequency (*)			30	100	KHz
T_j	Thermal Shutdown			150		°C
T_d	Dead Time Protection			100		ns

TRANSISTORS

OFF						
I_{DSS}	Leakage Current	Fig. 11 V_s = 52 V			1	mA
ON						
R_{DS}	On Resistance	Fig. 4,5		0.3	0.55	Ω
$V_{DS(ON)}$	Drain Source Voltage	Fig. 9 I_{DS} = 1A **L6201** I_{DS} = 1.2A **L6202** I_{DS} = 3A **L6201P/03**		 0.3 0.36 0.9		 V V V
V_{sens}	Sensing Voltage		– 1		4	V

SOURCE DRAIN DIODE

V_{sd}	Forward ON Voltage	Fig. 6a and b I_{SD} = 1A **L6201** EN = L I_{SD} = 1.2A **L6202** EN = L I_{SD} = 3A **L6201P/03** EN = L		 0.9 (**) 0.9 (**) 1.35(**)		 V V V
t_{rr}	Reverse Recovery Time	$\frac{dif}{dt}$ = 25 A/µs I_F = 1A L6201 I_F = 1.2A L6202 I_F = 3A L6203		300		ns
t_{fr}	Forward Recovery Time			200		ns

LOGIC LEVELS

$V_{IN\ L}$, $V_{EN\ L}$	Input Low Voltage		– 0.3		0.8	V
$V_{IN\ H}$, $V_{EN\ H}$	Input High Voltage		2		7	V
$I_{IN\ L}$, $I_{EN\ L}$	Input Low Current	V_{IN}, V_{EN} = L			–10	µA
$I_{IN\ H}$, $I_{EN\ H}$	Input High Current	V_{IN}, V_{EN} = H		30		µA

ELECTRICAL CHARACTERISTICS (Continued)
LOGIC CONTROL TO POWER DRIVE TIMING

Symbol	Parameter	Test Conditions	Min.	Typ.	Max.	Unit
t_1 (V_i)	Source Current Turn-off Delay	Fig. 12		300		ns
t_2 (V_i)	Source Current Fall Time	Fig. 12		200		ns
t_3 (V_i)	Source Current Turn-on Delay	Fig. 12		400		ns
t_4 (V_i)	Source Current Rise Time	Fig. 12		200		ns
t_5 (V_i)	Sink Current Turn-off Delay	Fig. 13		300		ns
t_6 (V_i)	Sink Current Fall Time	Fig. 13		200		ns
t_7 (V_i)	Sink Current Turn-on Delay	Fig. 13		400		ns
t_8 (V_i)	Sink Current Rise Time	Fig. 13		200		ns

(*) Limited by power dissipation
(**) In synchronous rectification the drain-source voltage drop VDS is shown in fig. 4 (L6202/03); typical value for the L6201 is of 0.3V.

Figure 1: Typical Normalized I_S vs. T_j

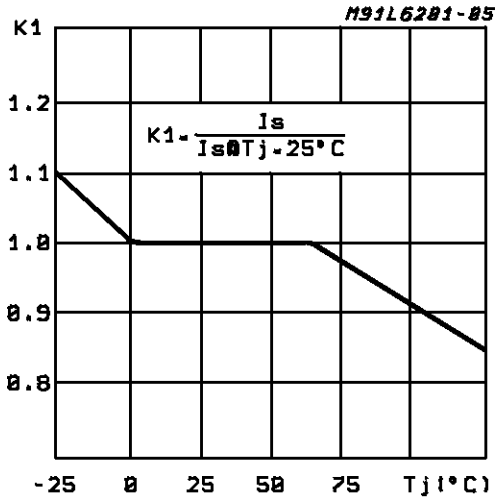

Figure 2: Typical Normalized Quiescent Current vs. Frequency

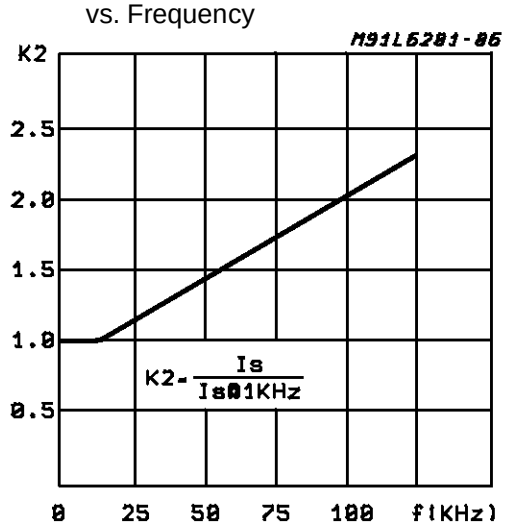

Figure 3: Typical Normalized I_S vs. V_S

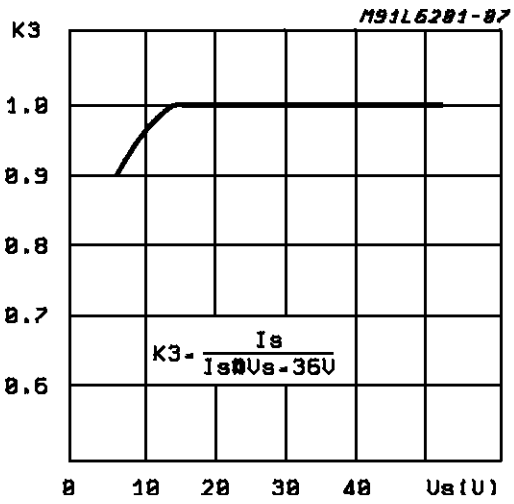

Figure 4: Typical $R_{DS\,(ON)}$ vs. V_S ~ V_{ref}

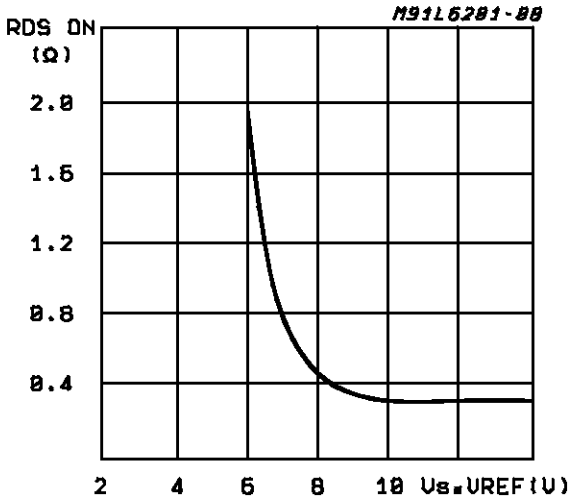

Figure 5: Normalized $R_{DS\ (ON)}$ at 25°C vs. Temperature Typical Values

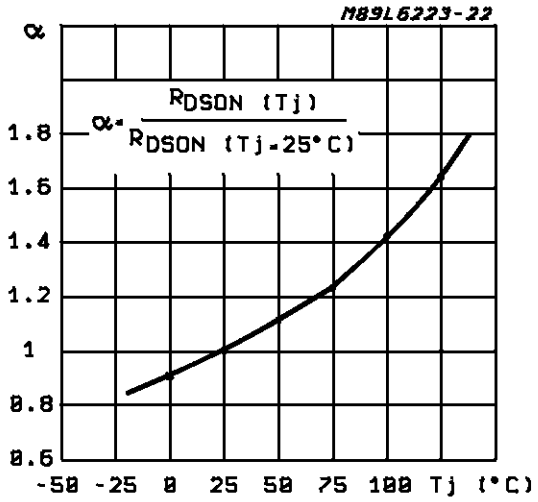

Figure 6a: Typical Diode Behaviour in Synchronous Rectification (L6201)

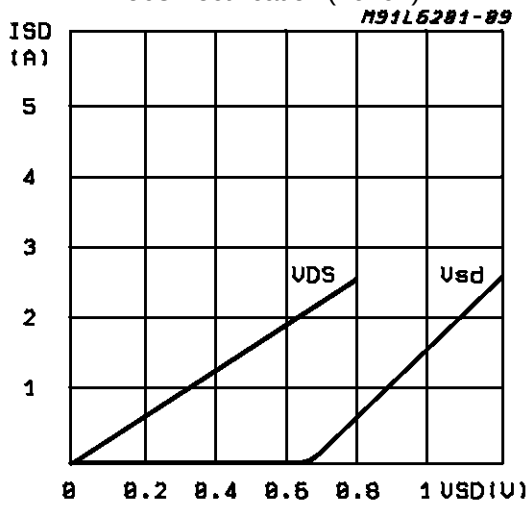

Figure 6b: Typical Diode Behaviour in Synchronous Rectification (L6201P/02/03)

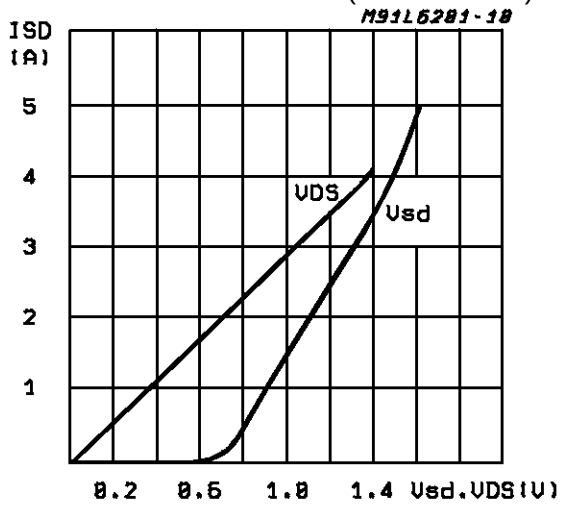

Figure 7a: Typical Power Dissipation vs I_L (L6201)

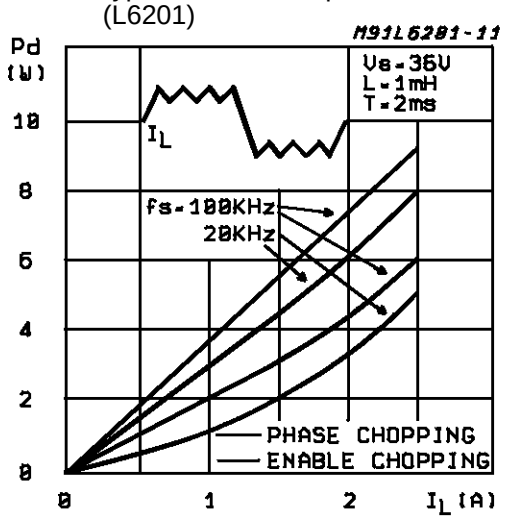

Figure 7b: Typical Power Dissipation vs I_L (L6201P, L6202, L6203))

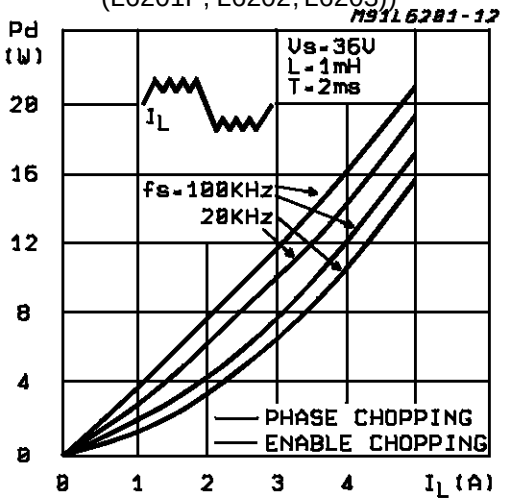

Figure 8a: Two Phase Chopping

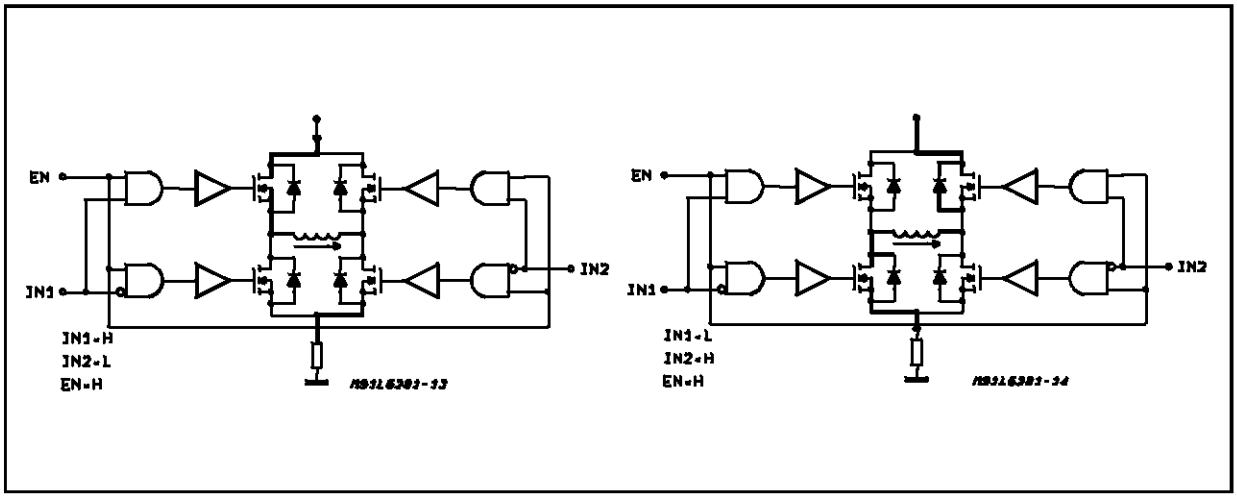

Figure 8b: One Phase Chopping

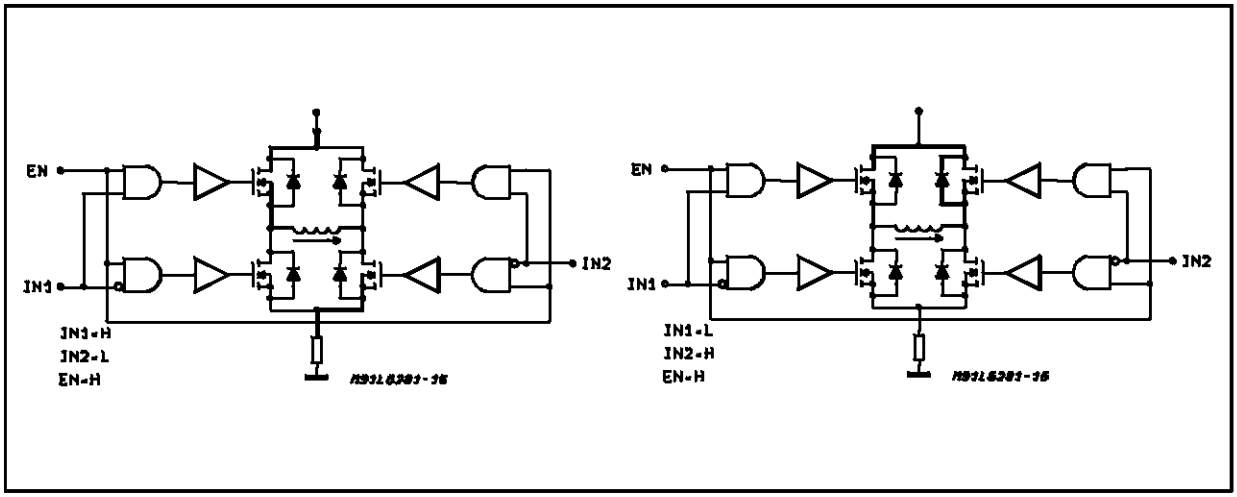

Figure 8c: Enable Chopping

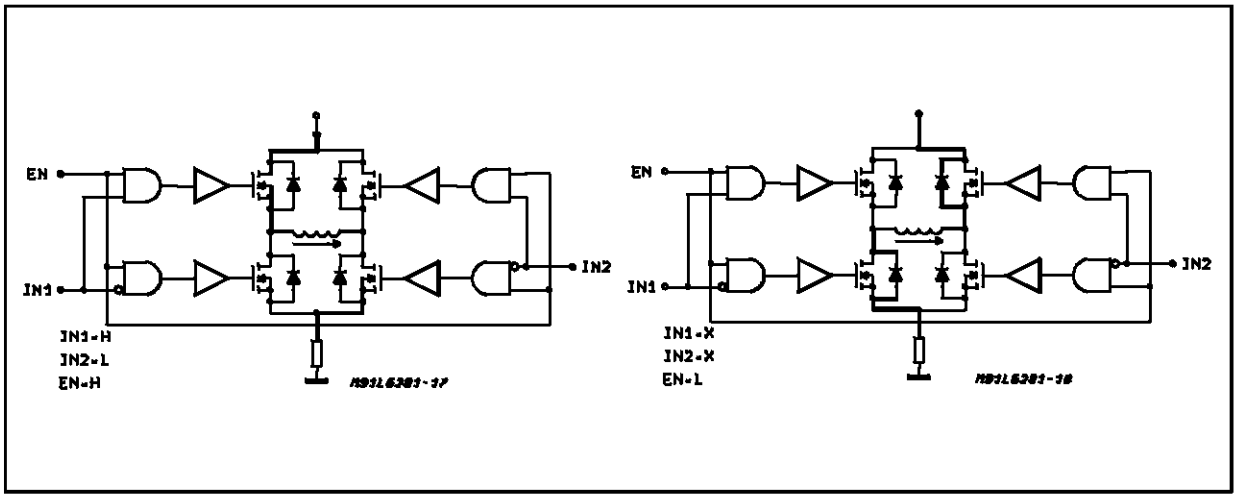

TEST CIRCUITS

Figure 9: Saturation Voltage

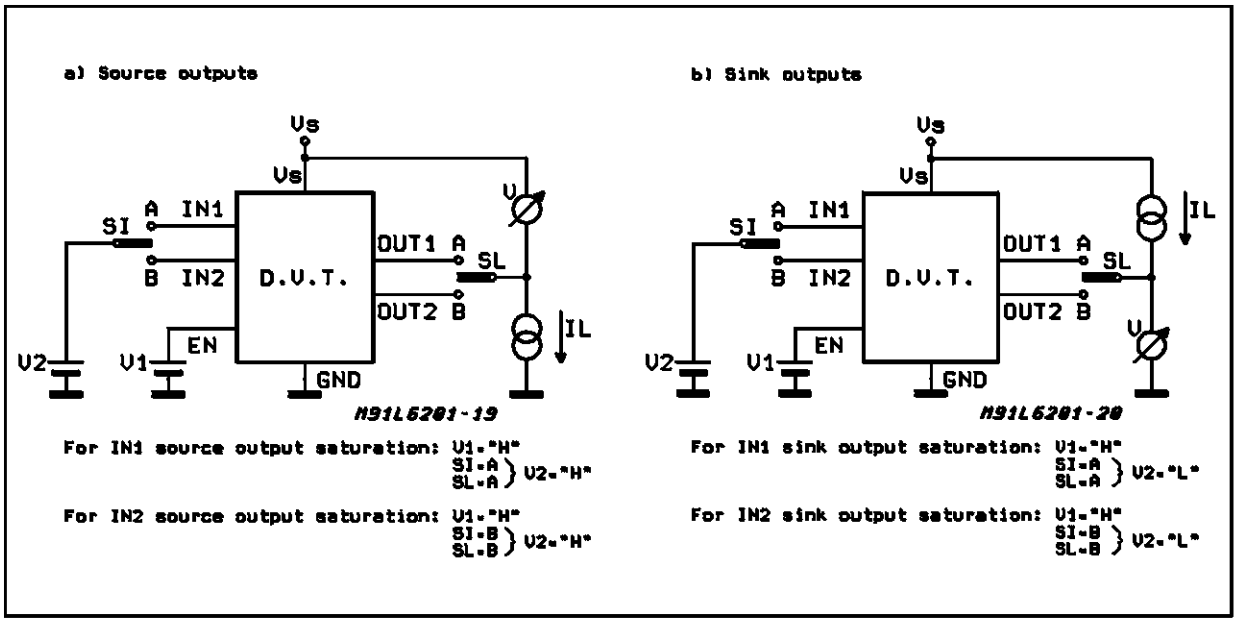

Figure 10: Quiescent Current

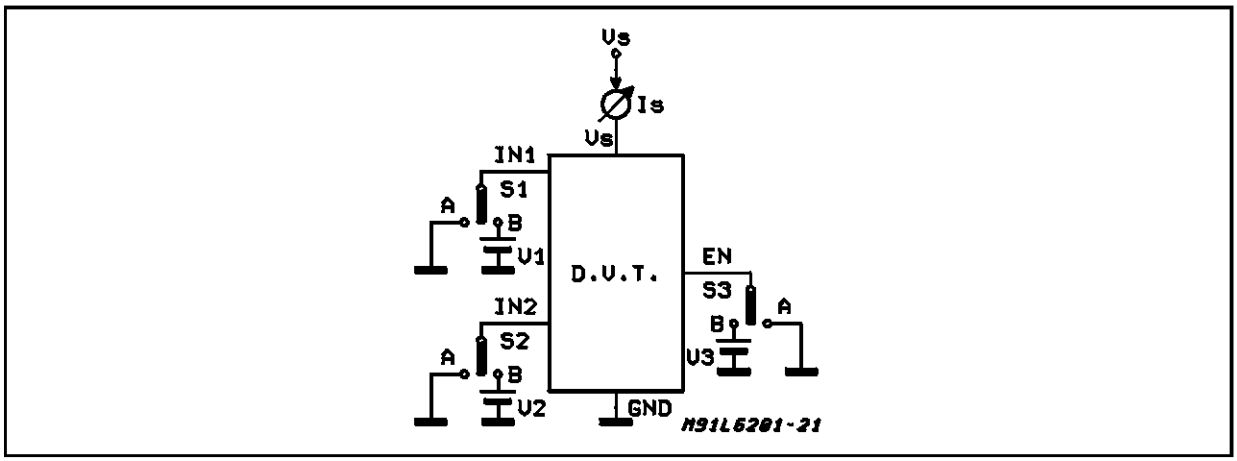

Figure 11: Leakage Current

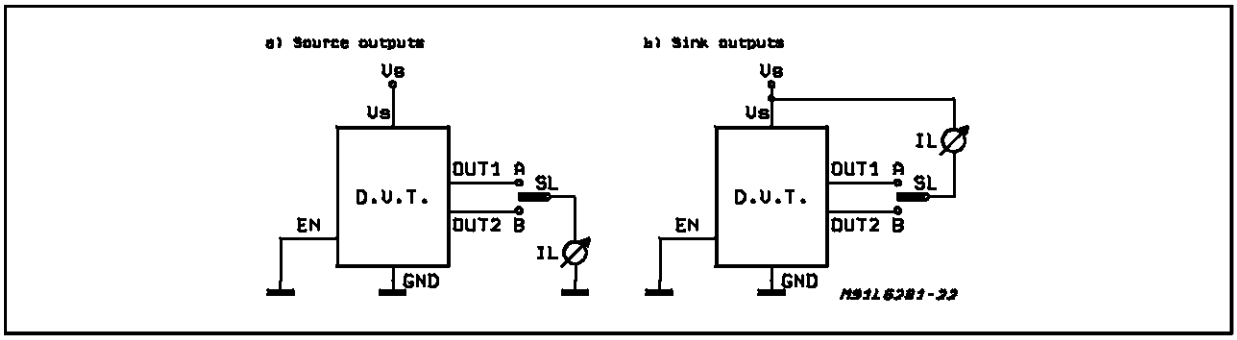

Figure 12: Source Current Delay Times vs. Input Chopper

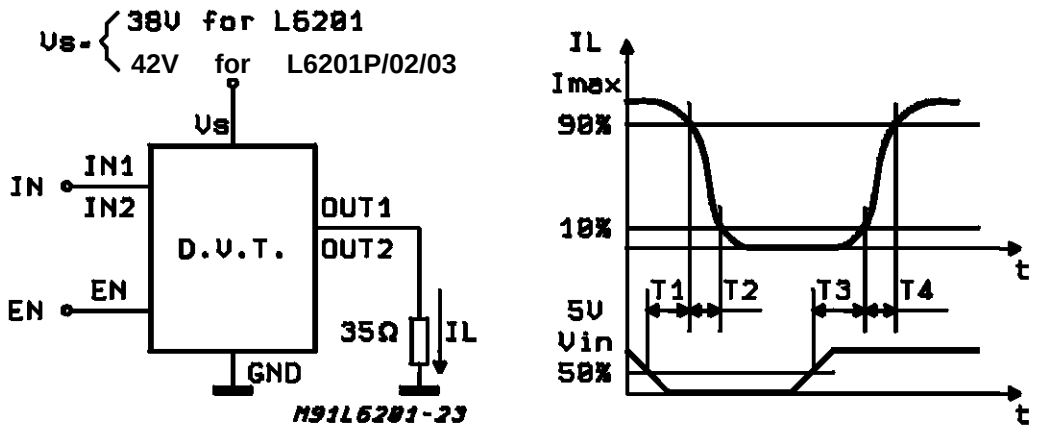

Figure 13: Sink Current Delay Times vs. Input Chopper

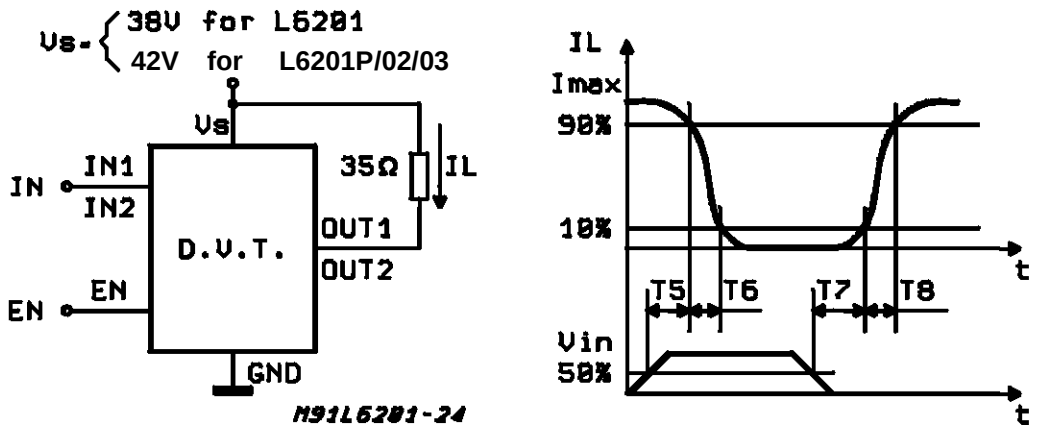

CIRCUIT DESCRIPTION

The L6201/1P/2/3 is a monolithic full bridge switching motor driver realized in the new Multipower-BCD technology which allows the integration of multiple, isolated DMOS power transistors plus mixed CMOS/bipolar control circuits. In this way it has been possible to make all the control inputs TTL, CMOS and µC compatible and eliminate the necessity of external MOS drive components. The Logic Drive is shown in table 1.

Table 1

Inputs			Output Mosfets (*)
	IN1	IN2	
V_{EN} = H	L	L	Sink 1, Sink 2
	L	H	Sink 1, Source 2
	H	L	Source 1, Sink 2
	H	H	Source 1, Source 2
V_{EN} = L	X	X	All transistors turned oFF

L = Low H = High X = DON't care
(*) Numbers referred to INPUT1 or INPUT2 controlled output stages

Although the device guarantees the absence of cross-conduction, the presence of the intrinsic diodes in the POWER DMOS structure causes the generation of current spikes on the sensing terminals. This is due to charge-discharge phenomena in the capacitors C1 & C2 associated with the drain source junctions (fig. 14). When the output switches from high to low, a current spike is generated associated with the capacitor C1. On the low-to-high transition a spike of the same polarity is generated by C2, preceded by a spike of the opposite polarity due to the charging of the input capacity of the lower POWER DMOS transistor (fig. 15).

Figure 14: Intrinsic Structures in the POWER DMOS Transistors

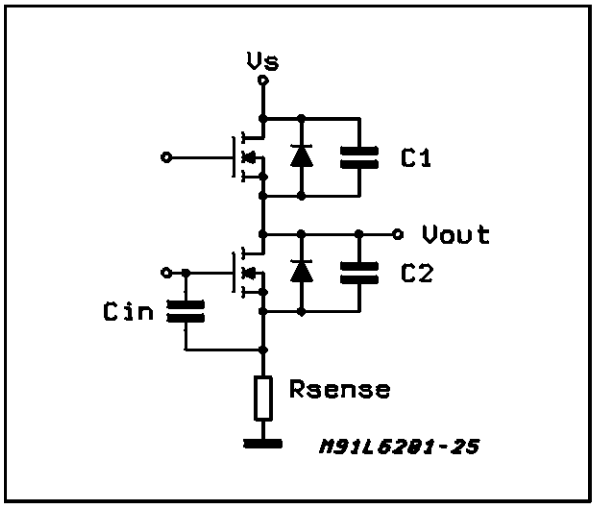

Figure 15: Current Typical Spikes on the Sensing Pin

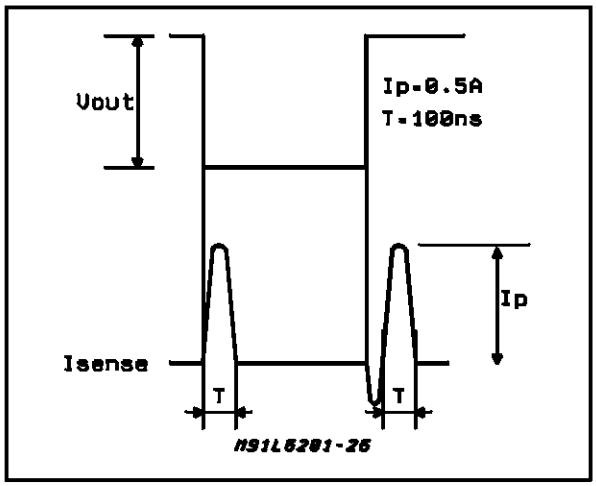

TRANSISTOR OPERATION

ON State

When one of the POWER DMOS transistor is ON it can be considered as a resistor $R_{DS\ (ON)}$ throughout the recommended operating range. In this condition the dissipated power is given by :

$$P_{ON} = R_{DS\ (ON)} \cdot I_{DS}^2 \text{ (RMS)}$$

The low $R_{DS\ (ON)}$ of the Multipower-BCD process can provide high currents with low power dissipation.

OFF State

When one of the POWER DMOS transistor is OFF the V_{DS} voltage is equal to the supply voltage and only the leakage current I_{DSS} flows. The power dissipation during this period is given by :

$$P_{OFF} = V_S \cdot I_{DSS}$$

The power dissipation is very low and is negligible in comparison to that dissipated in the ON STATE.

Transitions

As already seen above the transistors have an intrinsic diode between their source and drain that can operate as a fast freewheeling diode in switched mode applications. During recirculation with the ENABLE input high, the voltage drop across the transistor is $R_{DS\ (ON)} \cdot I_D$ and when it reaches the diode forward voltage it is clamped. When the ENABLE input is low, the POWER MOS is OFF and the diode carries all of the recirculation current. The power dissipated in the transitional times in the cycle depends upon the voltage-current waveforms and in the driving mode. (see Fig. 7ab and Fig. 8abc).

$$P_{trans.} = I_{DS}\ (t) \cdot V_{DS}\ (t)$$

Boostrap Capacitors

To ensure that the POWER DMOS transistors are driven correctly gate to source voltage of typ. 10 V must be guaranteed for all of the N-channel DMOS transistors. This is easy to be provided for the lower POWER DMOS transistors as their sources are refered to ground but a gate voltage greater than the supply voltage is necessary to drive the upper transistors. This is achieved by an internal charge pump circuit that guarantees correct DC drive in combination with the boostrap circuit. For efficient charging the value of the boostrap capacitor should be greater than the input capacitance of the power transistor which is around 1 nF. It is recommended that a capacitance of at least 10 nF is used for the bootstrap. If a smaller capacitor is used there is a risk that the POWER transistors will not be fully turned on and they will show a higher RDS (ON). On the other hand if a elevated value is used it is possible that a current spike may be produced in the sense resistor.

Reference Voltage

To by-pass the internal Ref. Volt. circuit it is recommended that a capacitor be placed between its pin and ground. A value of 0.22 µF should be sufficient for most applications. This pin is also protected against a short circuit to ground: a max. current of 2mA max. can be sinked out.

Dead Time

To protect the device against simultaneous conduction in both arms of the bridge resulting in a rail to rail short circuit, the integrated logic control provides a dead time greater than 40 ns.

Thermal Protection

A thermal protection circuit has been included that will disable the device if the junction temperature reaches 150 °C. When the temperature has fallen to a safe level the device restarts the input and enable signals under control.

APPLICATION INFORMATION

Recirculation

During recirculation with the ENABLE input high, the voltage drop across the transistor is RDS (ON)· IL, clamped at a voltage depending on the characteristics of the source-drain diode. Although the device is protected against cross conduction, current spikes can appear on the current sense pin due to charge/discharge phenomena in the intrinsic source drain capacitances. In the application this does not cause any problem because the voltage spike generated on the sense resistor is masked by the current controller circuit.

Rise Time T_r (See Fig. 16)

When a diagonal of the bridge is turned on current begins to flow in the inductive load until the maximum current I_L is reached after a time T_r. The dissipated energy $E_{OFF/ON}$ is in this case :

$$E_{OFF/ON} = [R_{DS\,(ON)} \cdot I_L^2 \cdot T_r] \cdot 2/3$$

Load Time T_{LD} (See Fig.16)

During this time the energy dissipated is due to the ON resistance of the transistors (E_{LD}) and due to commutation (E_{COM}). As two of the POWER DMOS transistors are ON, E_{ON} is given by :

$$E_{LD} = I_L^2 \cdot R_{DS\,(ON)} \cdot 2 \cdot T_{LD}$$

In the commutation the energy dissipated is :

$$E_{COM} = V_S \cdot I_L \cdot T_{COM} \cdot f_{SWITCH} \cdot T_{LD}$$

Where :

$T_{COM} = T_{TURN\text{-}ON} = T_{TURN\text{-}OFF}$

f_{SWITCH} = Chopping frequency.

Fall Time T_f (See Fig. 16)

It is assumed that the energy dissipated in this part of the cycle takes the same form as that shown for the rise time :

$$E_{ON/OFF} = [R_{DS\,(ON)} \cdot I_L^2 \cdot T_f] \cdot 2/3$$

Figure 16.

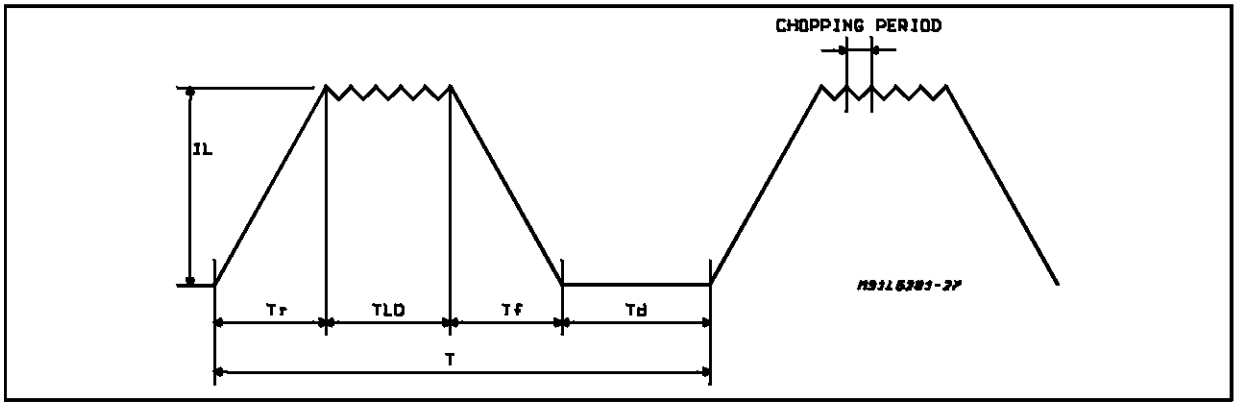

Quiescent Energy

The last contribution to the energy dissipation is due to the quiescent supply current and is given by:

$$E_{QUIESCENT} = I_{QUIESCENT} \cdot V_s \cdot T$$

Total Energy Per Cycle

$$E_{TOT} = E_{OFF/ON} + E_{LD} + E_{COM} + \\ + E_{ON/OFF} + E_{QUIESCENT}$$

The Total Power Dissipation P_{DIS} is simply :

$$P_{DIS} = E_{TOT}/T$$

T_r = Rise time

T_{LD} = Load drive time

T_f = Fall time

T_d = Dead time

T = Period

$T = T_r + T_{LD} + T_f + T_d$

DC Motor Speed Control

Since the I.C. integrates a full H-Bridge in a single package it is idealy suited for controlling DC motors. When used for DC motor control it performs the power stage required for both speed and direction control. The device can be combined with a current regulator like the L6506 to implement a transconductance amplifier for speed control, as shown in figure 17. In this particular configuration only half of the L6506 is used and the other half of the device may be used to control a second motor.

The L6506 senses the voltage across the sense resistor R_S to monitor the motor current: it compares the sensed voltage both to control the speed and during the brake of the motor.

Between the sense resistor and each sense input of the L6506 a resistor is recommended; if the connections between the outputs of the L6506 and the inputs of the L6203 need a long path, a resistor must be added between each input of the L6203 and ground.

A snubber network made by the series of R and C must be foreseen very near to the output pins of the I.C.; one diode (BYW98) is connected between each power output pin and ground as well.

The following formulas can be used to calculate the snubber values:

$R \cong V_S/I_p$

$C = I_p/(dV/dt)$ where:

V_S is the maximum Supply Voltage foreseen on the application;
I_p is the peak of the load current;
dv/dt is the limited rise time of the output voltage (200V/µs is generally used).

If the Power Supply Cannot Sink Current, a suitable large capacitor must be used and connected near the supply pin of the L6203. Sometimes a capacitor at pin 17 of the L6506 let the application better work. For motor current up to 2A max., the L6202 can be used in a similar circuit configuration for which a typical Supply Voltage of 24V is recommended.

Figure 17: Bidirectional DC Motor Control

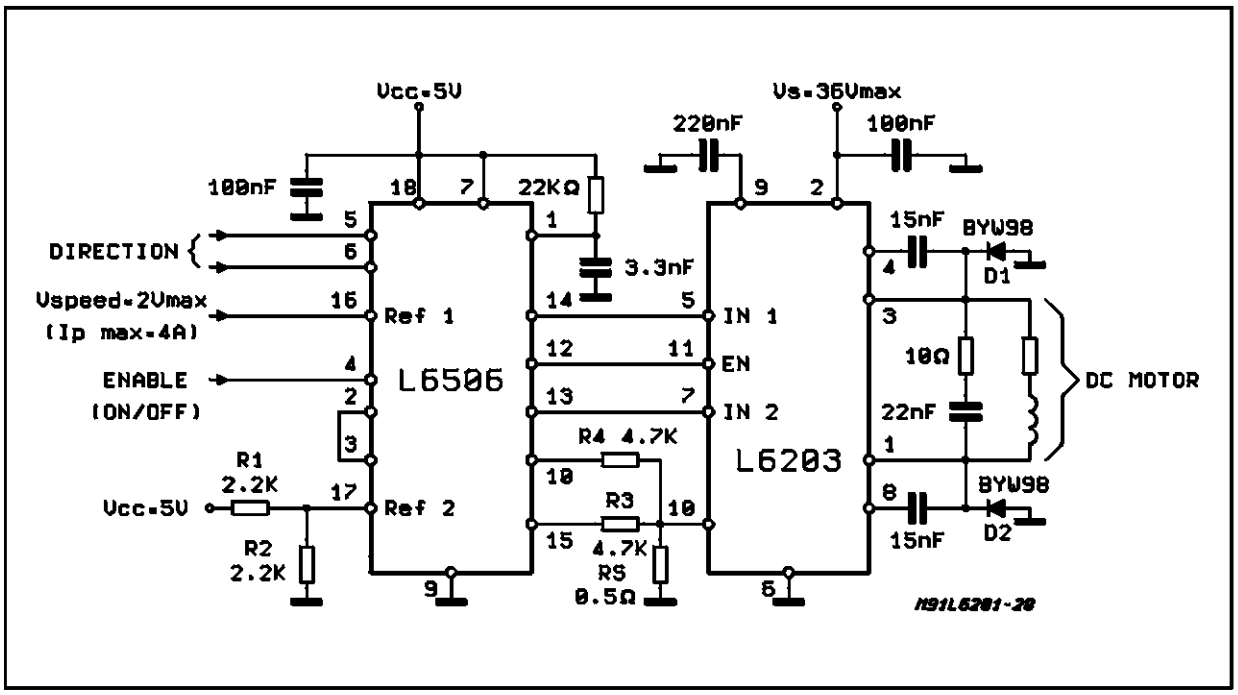

BIPOLAR STEPPER MOTORS APPLICATIONS

Bipolar stepper motors can be driven with one L6506 or L297, two full bridge BCD drivers and very few external components. Together these three chips form a complete microprocessor-to-stepper motor interface is realized.

As shown in Fig. 18 and Fig. 19, the controller connect directly to the two bridge BCD drivers. External component are minimalized: an R.C. network to set the chopper frequency, a resistive divider (R1; R2) to establish the comparator reference voltage and a snubber network made by R and C in series (See DC Motor Speed Control).

Figure 18: Two Phase Bipolar Stepper Motor Control Circuit with Chopper Current Control

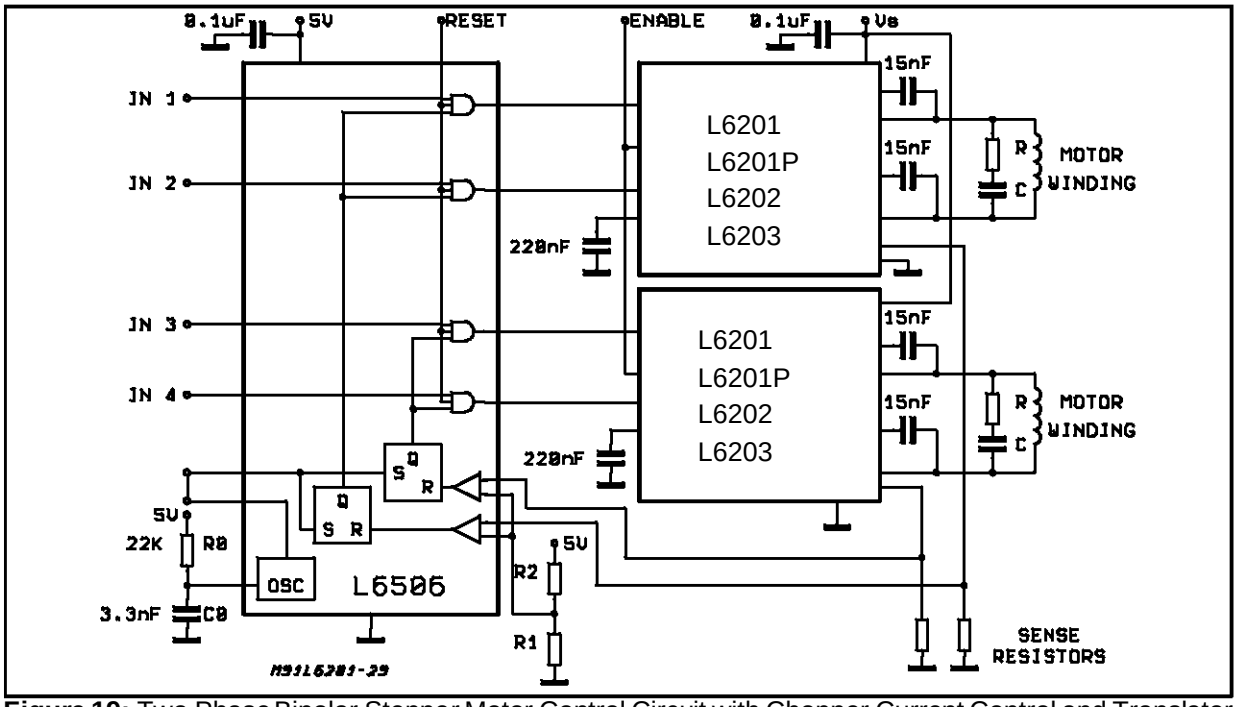

Figure 19: Two Phase Bipolar Stepper Motor Control Circuit with Chopper Current Control and Translator

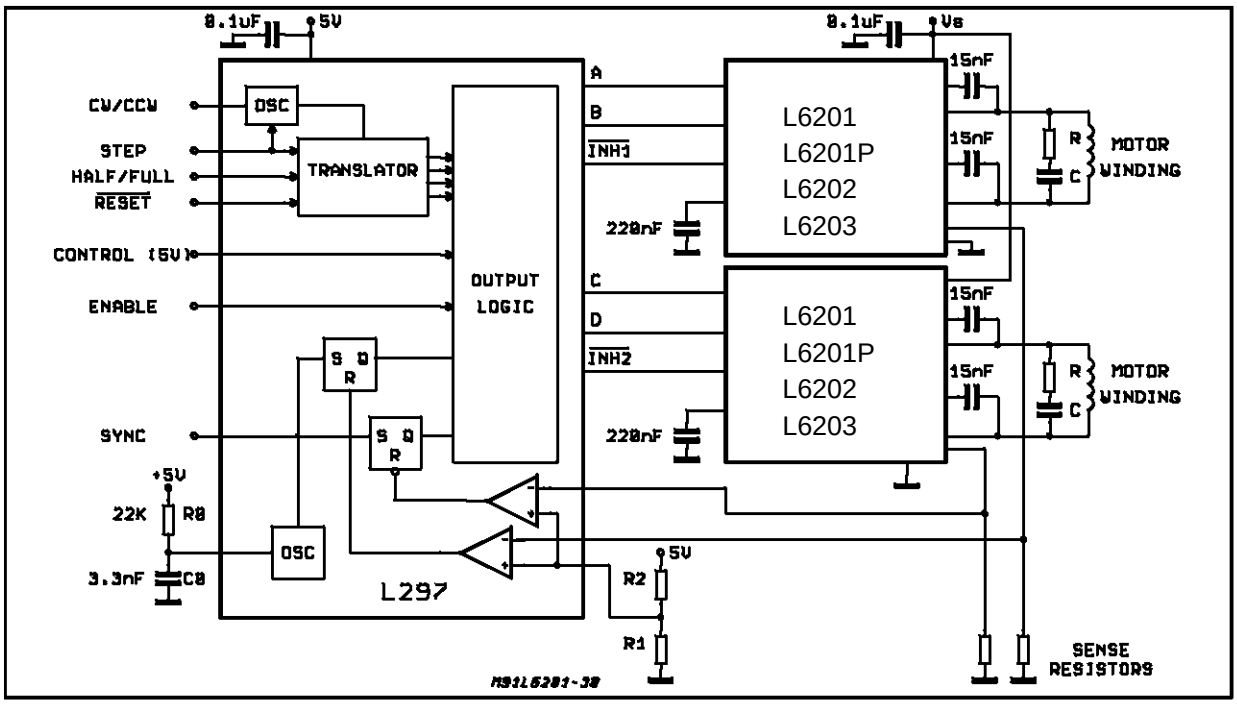

It could be requested to drive a motor at V_S lower than the minimum recommended one of 12V (See Electrical Characteristics); in this case, by accepting a possible small increas in the $R_{DS\ (ON)}$ resistance of the power output transistors at the lowest Supply Voltage value, may be a good solution the one shown in Fig. 20.

Figure 20: L6201/1P/2/3Used at a Supply Voltage Range Between 9 and 18V

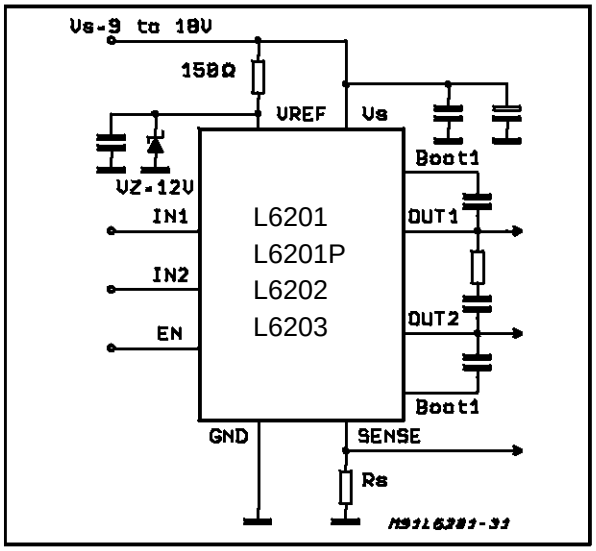

THERMAL CHARACTERISTICS

Thanks to the high efficiency of this device, often a true heatsink is not needed or it is simply obtained by means of a copper side on the P.C.B. (L6201/2).
Under heavy conditions, the L6203 needs a suitable cooling.
By using two square copper sides in a similar way as it shown in Fig. 23, Fig. 21 indicates how to choose the on board heatsink area when the L6201 total power dissipation is known since:

$$R_{Th\ j\text{-}amb} = (T_{j\ max.} - T_{amb\ max}) / P_{tot}$$

Figure 22 shows the Transient Thermal Resistance vs. a single pulse time width.
Figure 23 and 24 refer to the L6202.
For the Multiwatt L6203 addition information is given by Figure 25 (Thermal Resistance Junction-Ambient vs. Total Power Dissipation) and Figure 26 (Peak Transient Thermal Resistance vs. Repetitive Pulse Width) while Figure 27 refers to the single pulse Transient Thermal Resistance.

Figure 21: Typical $R_{Th\ J\text{-}amb}$ vs. "On Board" Heatsink Area (L6201)

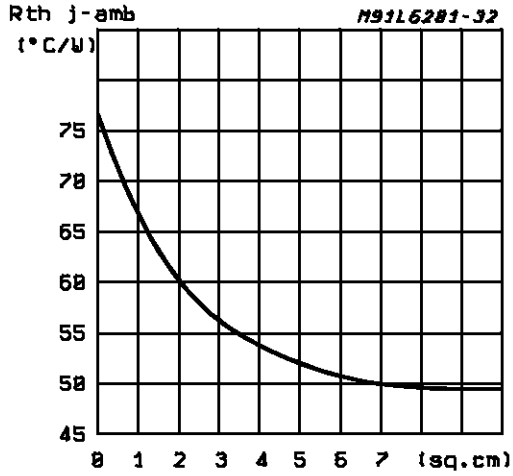

Figure 22: Typical Transient R_{TH} in Single Pulse Condition (L6201)

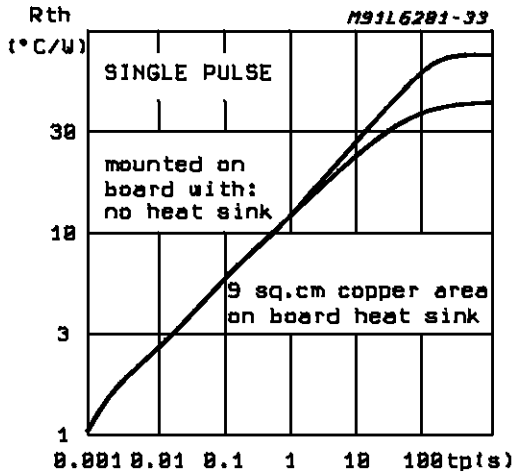

Figurre 23: Typical $R_{Th\ J\text{-}amb}$ vs. Two "On Board" Square Heatsink (L6202)

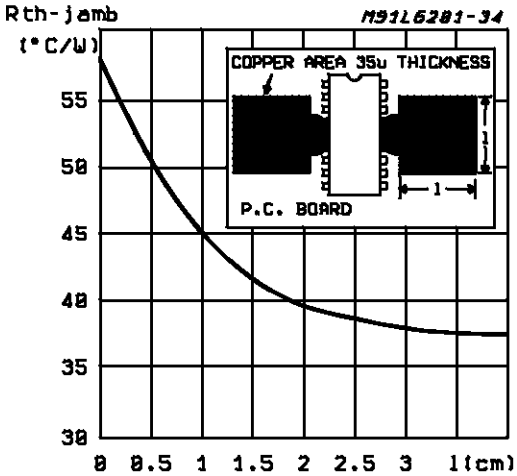

Figure 24: Typical Transient Thermal Resistance for Single Pulses (L6202)

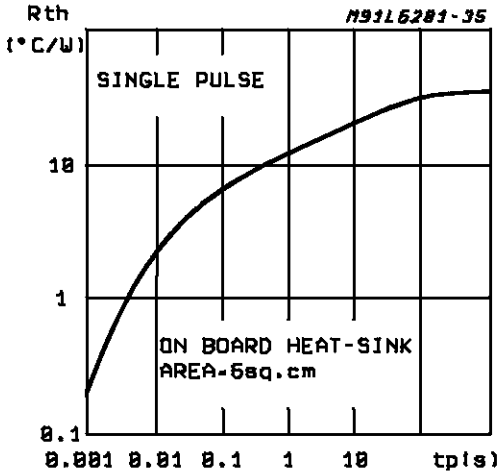

Figure 25: Typical $R_{Th\ J\text{-}amb}$ of Multiwatt Package vs. Total Power Dissipation

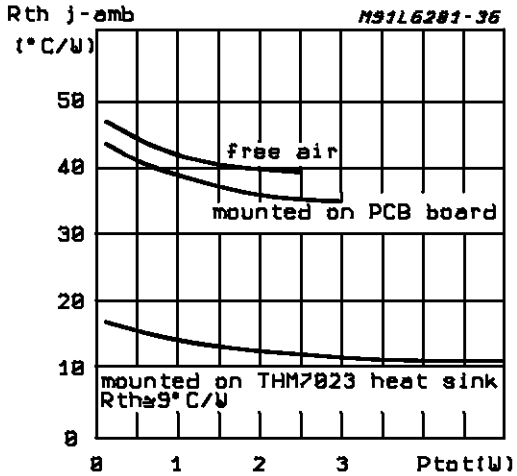

Figure 26: Typical Transient Thermal Resistance for Single Pulses with and without Heatsink (L6203)

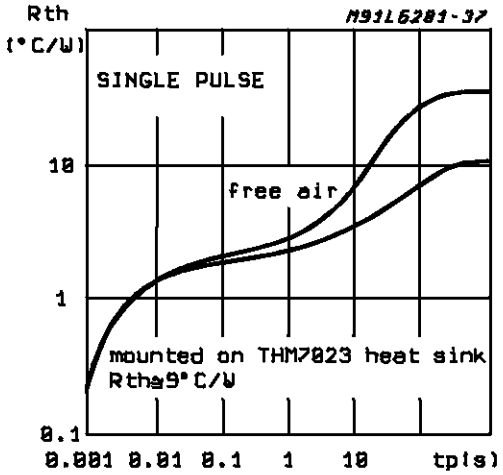

Figure 27: Typical Transient Thermal Resistance versus Pulse Width and Duty Cycle (L6203)

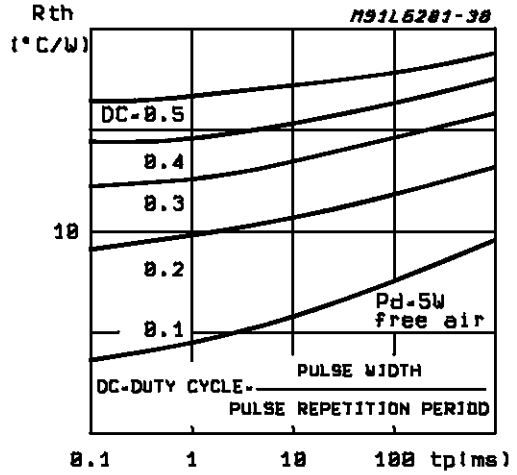

POWERDIP18 PACKAGE MECHANICAL DATA

DIM.	mm			inch		
	MIN.	TYP.	MAX.	MIN.	TYP.	MAX.
a1	0.51			0.020		
B	0.85		1.40	0.033		0.055
b		0.50			0.020	
b1	0.38		0.50	0.015		0.020
D			24.80			0.976
E		8.80			0.346	
e		2.54			0.100	
e3		20.32			0.800	
F			7.10			0.280
I			5.10			0.201
L		3.30			0.130	
Z			2.54			0.100

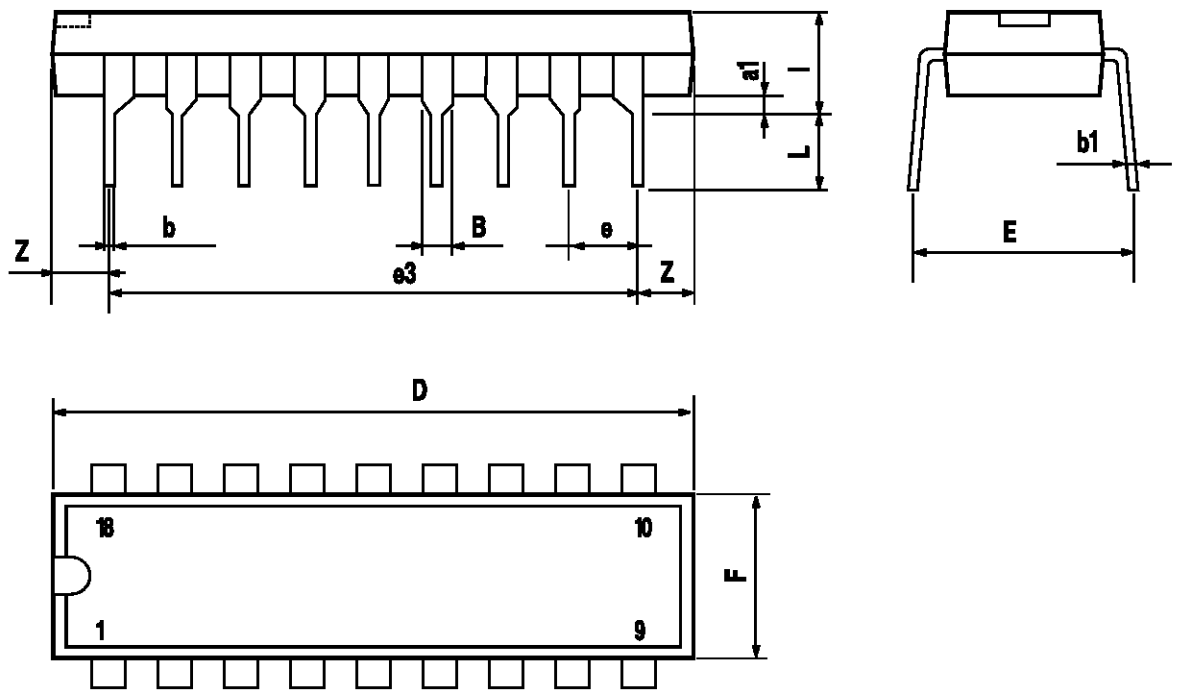

SO20 PACKAGE MECHANICAL DATA

DIM.	mm			inch		
	MIN.	TYP.	MAX.	MIN.	TYP.	MAX.
A			2.65			0.104
a1	0.1		0.3	0.004		0.012
a2			2.45			0.096
b	0.35		0.49	0.014		0.019
b1	0.23		0.32	0.009		0.013
C		0.5			0.020	
c1	45 (typ.)					
D	12.6		13.0	0.496		0.512
E	10		10.65	0.394		0.419
e		1.27			0.050	
e3		11.43			0.450	
F	7.4		7.6	0.291		0.299
L	0.5		1.27	0.020		0.050
M			0.75			0.030
S	8 (max.)					

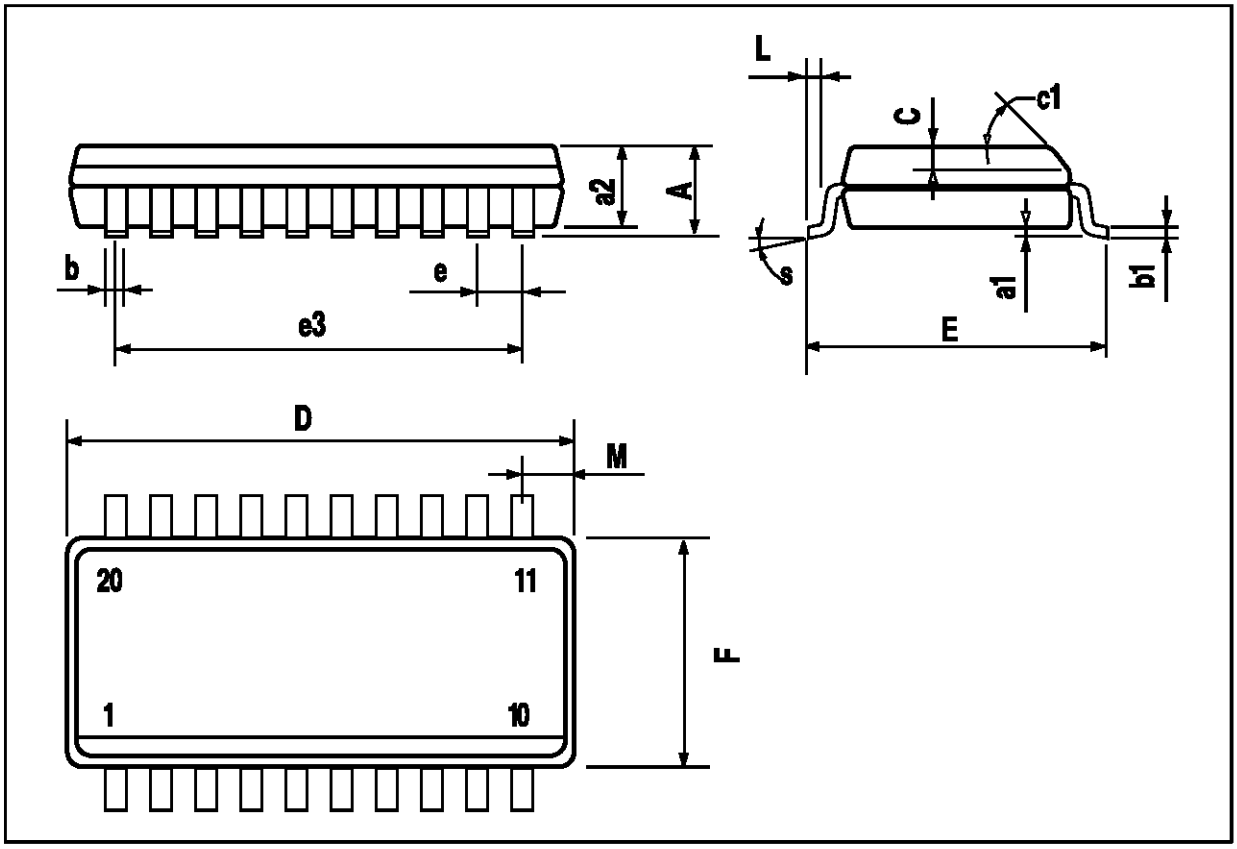

PowerSO20 PACKAGE MECHANICAL DATA

DIM.	mm			inch		
	MIN.	TYP.	MAX.	MIN.	TYP.	MAX.
A			3.60			0.1417
a1	0.10		0.30	0.0039		0.0118
a2			3.30			0.1299
a3	0		0.10	0		0.0039
b	0.40		0.53	0.0157		0.0209
c	0.23		0.32	0.009		0.0126
D (1)	15.80		16.00	0.6220		0.6299
E	13.90		14.50	0.5472		0.570
e		1.27			0.050	
e3		11.43			0.450	
E1 (1)	10.90		11.10	0.4291		0.437
E2			2.90			0.1141
G	0		0.10	0		0.0039
h			1.10			
L	0.80		1.10	0.0314		0.0433
N	10° (max.)					
S	8° (max.)					
T		10.0			0.3937	

(1) "D and E1" do not include mold flash or protrusions
- Mold flash or protrusions shall not exceed 0.15mm (0.006")

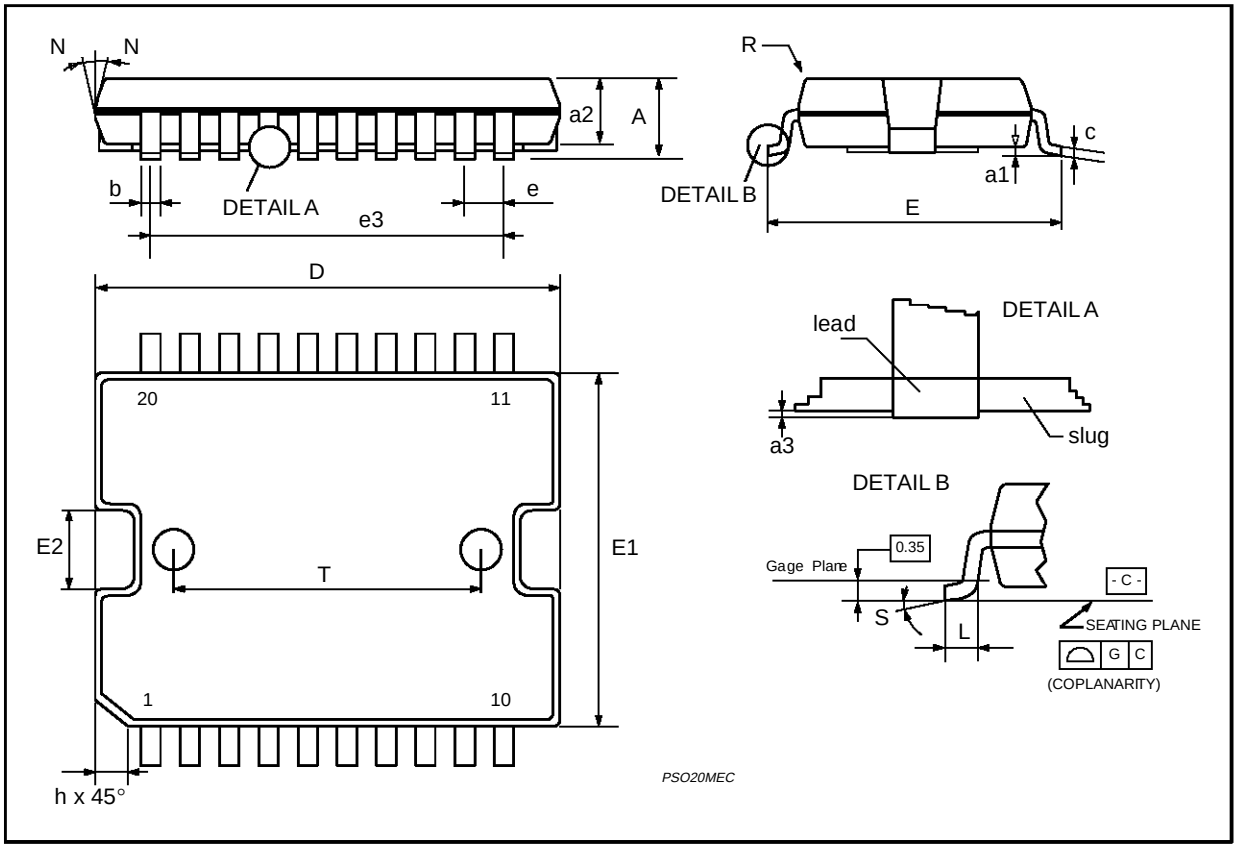

MULTIWATT11 PACKAGE MECHANICAL DATA

DIM.	mm			inch		
	MIN.	TYP.	MAX.	MIN.	TYP.	MAX.
A			5			0.197
B			2.65			0.104
C			1.6			0.063
D		1			0.039	
E	0.49		0.55	0.019		0.022
F	0.88		0.95	0.035		0.037
G	1.57	1.7	1.83	0.062	0.067	0.072
G1	16.87	17	17.13	0.664	0.669	0.674
H1	19.6			0.772		
H2			20.2			0.795
L	21.5		22.3	0.846		0.878
L1	21.4		22.2	0.843		0.874
L2	17.4		18.1	0.685		0.713
L3	17.25	17.5	17.75	0.679	0.689	0.699
L4	10.3	10.7	10.9	0.406	0.421	0.429
L7	2.65		2.9	0.104		0.114
M	4.1	4.3	4.5	0.161	0.169	0.177
M1	4.88	5.08	5.3	0.192	0.200	0.209
S	1.9		2.6	0.075		0.102
S1	1.9		2.6	0.075		0.102
Dia1	3.65		3.85	0.144		0.152

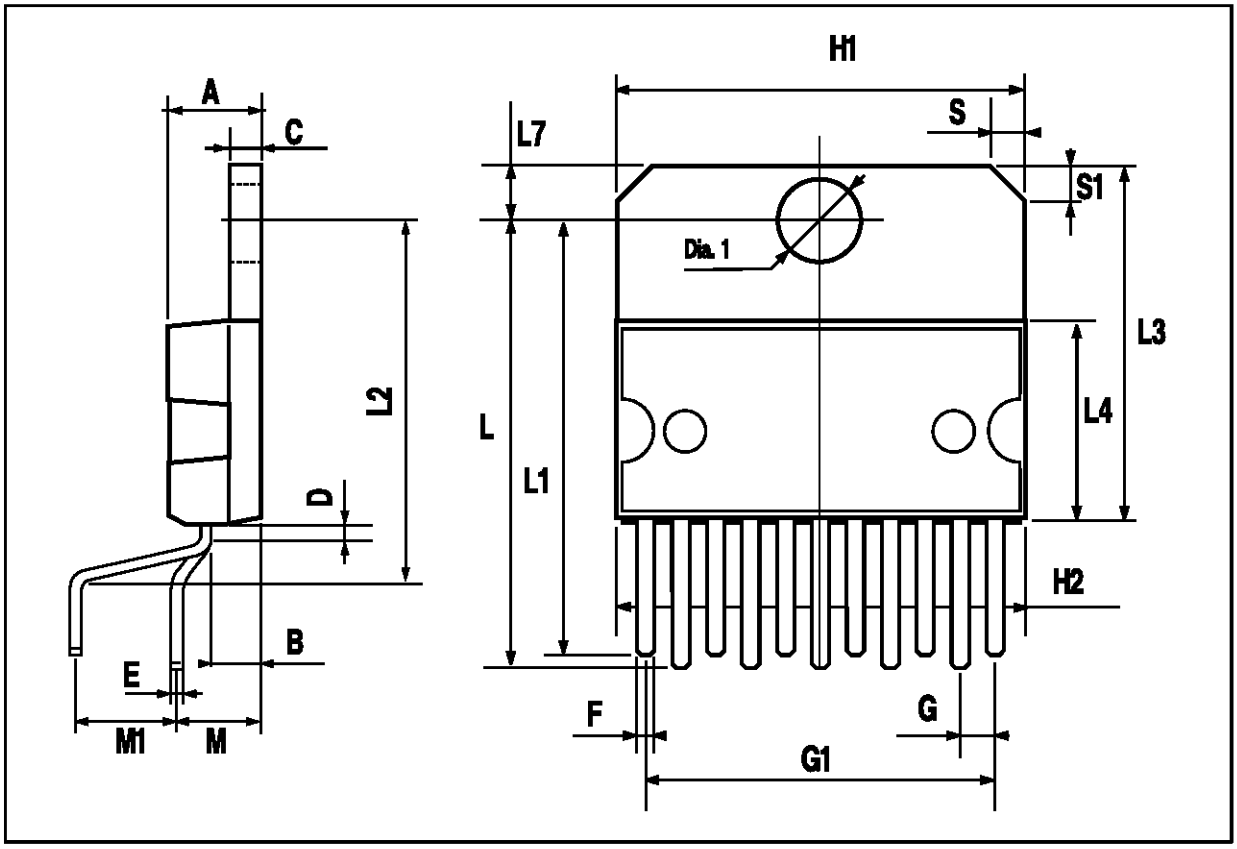

Information furnished is believed to be accurate and reliable. However, SGS-THOMSON Microelectronics assumes no responsibility for the consequences of use of such information nor for any infringement of patents or other rights of third parties which may result from its use. No license is granted by implication or otherwise under any patent or patent rights of SGS-THOMSON Microelectronics. Specification mentioned in this publication are subject to change without notice. This publication supersedes and replaces all information previously supplied. SGS-THOMSON Microelectronics products are not authorized for use as critical components in life support devices or systems without express written approval of SGS-THOMSON Microelectronics.

© 1996 SGS-THOMSON Microelectronics – Printed in Italy – All Rights Reserved

SGS-THOMSON Microelectronics GROUP OF COMPANIES

Australia - Brazil - Canada - China - France - Germany - Hong Kong - Italy - Japan - Korea - Malaysia - Malta - Morocco - The Netherlands - Singapore - Spain - Sweden - Switzerland - Taiwan - Thailand - United Kingdom - U.S.A.

SGS-THOMSON MICROELECTRONICS

L6219

STEPPER MOTOR DRIVER

ADVANCE DATA

- ABLE TO DRIVE BOTH WINDINGS OF BIPOLAR STEPPER MOTOR
- OUTPUT CURRENT UP TO 750mA EACH WINDING
- WIDE VOLTAGE RANGE 10V TO 46V
- HALF-STEP, FULL-STEP AND MICROSTEPPING MODE
- BUILT-IN PROTECTION DIODES
- INTERNAL PWM CURRENT CONTROL
- LOW OUTPUT SATURATION VOLTAGE
- DESIGNED FOR UNSTABILIZED MOTOR SUPPLY VOLTAGE
- INTERNAL THERMAL SHUTDOWN

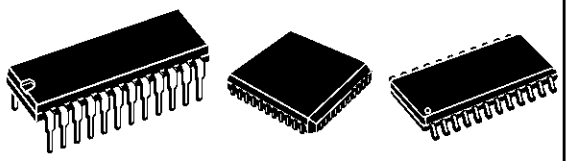

Powerdip 20+2+2	PLCC44	SO20+2+2
ORDERING NUMBERS:		
L6219	L6219D	L6219DS

DESCRIPTION

The L6219 is a bipolar monolithic integrated circuits intended to control and drive both winding of a bipolar stepper motor or bidirectionally control two DC motors.

The L6219 with a few external components form a complete control and drive circuit for LS-TTL or microprocessor controlled stepper motor system.

The power stage is a dual full bridge capable of sustaining 46V and including four diodes for current recirculation.

A cross conduction protection is provided to avoid simultaneous cross conduction during switching current direction.

An internal pulse-width-modulation (PWM) controls the output current to 750mA with peak start-up current up to 1A.

Wide range of current control from 750mA (each bridge) is permitted by means of two logic inputs and an external voltage reference. A phase input to each bridge determines the load current direction.

A thermal protection circuitry disables the outputs if the chip temperature exceeds safe operating limits.

BLOCK DIAGRAM

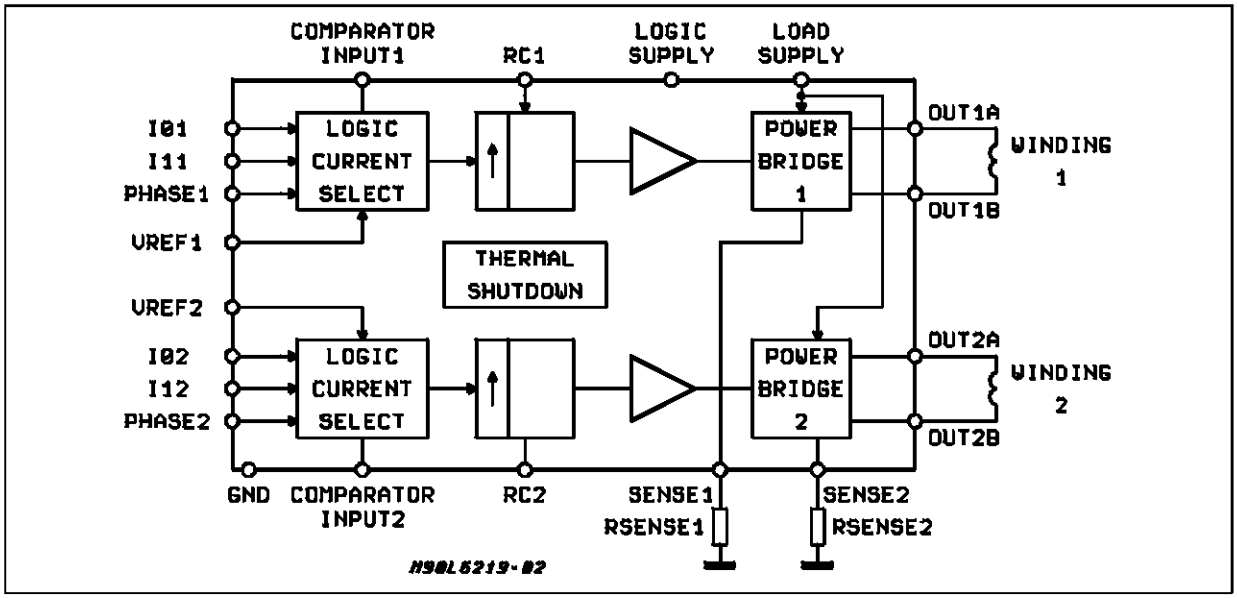

This is advanced information on a new product now in development or undergoing evaluation. Details are subject to change without notice.

PIN CONNECTIONS (Top view)

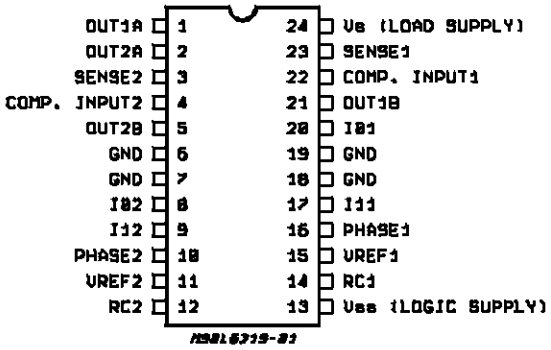

Powerdip and SO

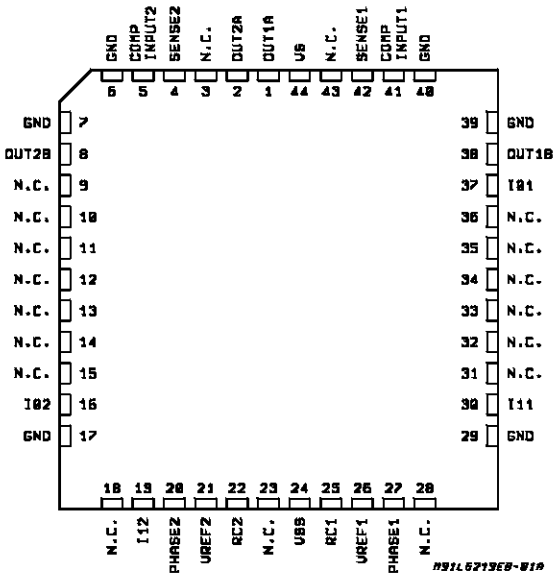

PLCC44

PIN FUNCTIONS

PLCC (*)	PDIP & SO	Name	Function
1;2	1;2	OUTPUT A	See pins 5;21
4;42	3;23	SENSE RESISTOR	Connection to Lower Emitters of Output Stage for Insertion of Current Sense Resistor
5;41	4;22	COMPARATOR INPUT	Input connected to the comparators. The voltage across the sense resistor is feedback to this input throught the low pass filter RC CC. The higher power transistors are disabled when the sense voltage exceeds the reference voltage of the selected comparator. When this occurs the current decays for a time set by R_T C_T (t_{off} = 1.1 R_T C_T). See fig. 1.
8;38	5;21	OUTPUT B	Output Connection. The output stage is a "H" bridge formed by four transistors and four diodes suitable for switching applications.
6;7;17	6;19	GROUND	See pins 7;18
29;39; 40	7;18	GROUND	Ground Connection. With pins 6 and 19 also conducts heat from die to printed circuit copper.
16;37	8;20	INPUT 0	See INPUT 1 (pins 9;17)
19;30	9;17	INPUT 1	These pins and pins 8;20 (INPUT 0) are logic inputs which select the outputs of the comparators to set the current level. Current also depends on the sensing resistor and reference voltage. See Funcional Description.
20;27	10;16	PHASE	This TTL-compatible logic inputs sets the direction of current flow through the load. A high level causes current to flow from OUTPUT A (source) to OUTPUT B (sink). A schmitt trigger on this input provides good noise immunity and a delay circuit prevents output stage short circuits during switching.
21;26	11;15	REFERENCE VOLTAGE	A voltage applied to this pin sets the reference voltage of the comparators, this determining the output current (also thus depending on R_s and the two inputs INPUT 0 and INPUT 1).
22;25	12;14	RC	A parallel RC network connected to this pin sets the OFF time of the higher power transistors. The pulse generator is a monostable triggered by the output of the comparators (t_{off} = 1.1 R_T C_T).
24	13	V_{SS} - LOGIC SUPPLY	Supply Voltage Input for Logic Circuitry
44	24	Vs - LOAD SUPPLY	Supply Voltage Input for the Output Stages.

(*) Pins: 3, 9,10,11,12,13,14,15,18,23,28,31,32,33,34,35,36,43 are Not Connected.
Note: ESD on GND, V_S, V_{SS}, OUT 1A and OUT 2A is guaranteed up to 1.5KV (Human Body Model, 1500Ω, 100pF).

ABSOLUTE MAXIMUM RATINGS

Symbol	Parameter	Value	Unit
V_S	Supply Voltage	50	V
I_o	Output Current (peak)	±1	A
I_o	Output Current (continuous)	±0.75	A
V_{SS}	Logic Supply Voltage	7	V
V_{IN}	Logic Input Voltage Range	-0.3 to +7	V
V_{sense}	Sense Output Voltage	1.5	V
T_J	Junction Temperature	+150	°C
T_{op}	Operating Temperature Range	0 to 70	°C
T_{stg}	Storage Temperature Range	-55 to +150	°C

THERMAL DATA

Symbol	Description		PLCC	PDIP	SO	Unit
$R_{thj-case}$	Thermal Resistance Junction-case	Max.	12	14	15	°C/W
$R_{thj-amb}$	Thermal Resistance Junction-ambient	Max.	45 (*)	60 (*)	75 (*)	°C/W

(*) With minimized copper area.

ELECTRICAL CHARACTERISTICS (T_j = 25°C, V_S = 46V, V_{SS} = 4.75V to 5.25V, V_{REF} = 5V; unless otherwise specified) See fig. 3.

Symbol	Parameter	Test Condition	Min.	Typ.	Max.	Unit
OUTPUT DRIVERS (OUT_A or OUT_B)						
V_S	Motor Supply Range		10		46	V
I_{CEX}	Output Leakage Current	V_{OUT} = Vs V_{OUT} = 0	- -	<1 <-1	50 -50	µA µA
$V_{CE(sat)}$	Output Saturation Voltage	Sink Driver, I_{OUT} = +500mA Sink Driver, I_{OUT} = +750mA Source Driver, I_{OUT} = -500mA Source Driver, I_{OUT} = -750mA	- - - -	0.3 0.7 1.1 1.3	0.6 1 1.4 1.6	V V V V
I_R	Clamp Diode Leakage Current	V_R = 50V	-	<1	50	µA
V_F	Clamp Diode Forward Voltage	Sink Diode Source Diode I_F =750mA		1 1	1.5 1.5	V V
$I_{S(on)}$	Driver Supply Current	Both Bridges ON, No Load	-	8	15	mA
$I_{S(off)}$	Driver Supply Current	Both Bridges OFF	-	6	10	mA
CONTROL LOGIC						
$V_{IN(H)}$	Input Voltage	All Inputs	2.4	-	-	V
$V_{IN(L)}$	Input Voltage	All Inputs	-	-	0.8	V
$I_{IN(H)}$	Input Current	VIN = 2.4V	-	<1	20	µA
$I_{IN(L)}$	Input Current	VIN = 0.84V	-	-3	-200	µA
V_{REF}	Reference Voltage	Operating	1.5	-	7.5	V
$I_{SS(ON)}$	Total Logic Supply Current	$I_o = I_1$ = 0.8V, No Load	-	64	74	mA
$I_{SS(OFF)}$	Total Logic Supply Current	$I_o = I_1$ = 2.4V, No Load	-	10	14	mA
COMPARATORS						
V_{REF} / V_{sense}	Current Limit Threshold (at trip point	$I_o = I_1$ = 0.8V	9.5	10	10.5	-
		I_o = 2.4V, I_1 = 0.8V	13.5	15	16.5	-
		I_o = 0.8V, I_1 = 2.4V	25.5	30	34.5	-
t_{off}	Cutoff Time	Rt = 56KΩ C_t = 820pF	-	50		µs
t_d	Turn Off Delay	Fig. 1	-	1		µs

ELECTRICAL CHARACTERISTICS (Continued)

Symbol	Parameter	Test Condition	Min.	Typ.	Max.	Unit
PROTECTION						
T_J	Thermal Shutdown Temperature		-	170	-	°C

Figure 1

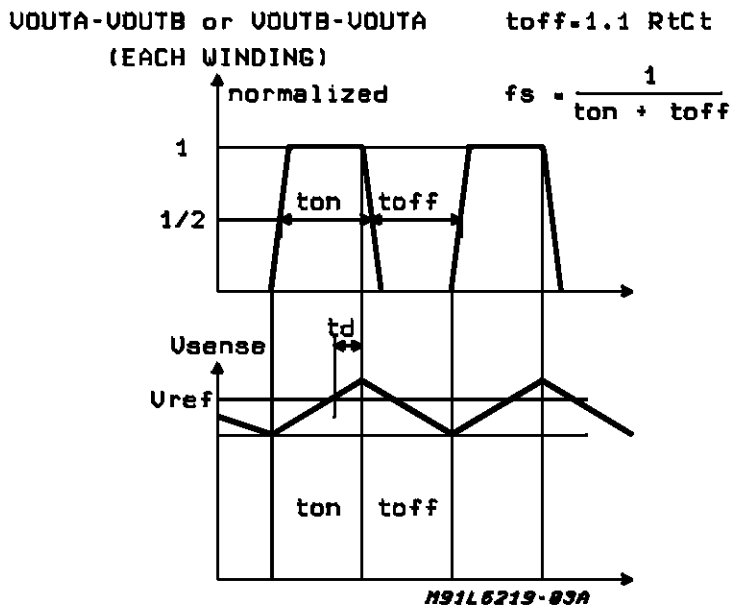

FUNCTIONAL DESCRIPTION

The circuit is intended to drive both windings of a bipolar stepper motor.
The peak current control is generated through switch mode regulation.
There is a choice of three different current levels with the two logic inputs I_{01} - I_{11} for winding 1 and I_{02} - I_{12} for winding 2.
The current can also be switched off completely

Input Logic (I_0 and I_1)

The current level in the motor winding is selected with these inputs. (See fig. 2)
If any of the logic inputs is left open, the circuit will treat it has a high level input.

I_o	I_1	Current Level
H	H	No Current
L	H	Low Current 1/3 I_o max
H	L	Medium Current 2/3 I_o max
L	L	Maximum Current I_o max

Phase

This input determines the direction of current flow in the windings, depending on the motor connections. The signal is fed through a Schmidt-trigger for noise immunity, and through a time delay in order to guarantee that no short-circuit occurs in the output stage during phase-shift.
High level on the PHASE input causes the motor current flow from Out A through the winding to Out B

Current Sensor

This part contains a current sensing resistor (R_S), a low pass filter (R_C, C_C) and three comparators.
Only one comparator is active at a time. It is activated by the input logic according to the current level chosen with signals I_o and I_1.
The motor current flows through the sensing resistor R_S.
When the current has increased so that the voltage across R_S becomes higher than the reference voltage on the other comparator input, the comparator goes high, which triggers the pulse generator.
The max peak current I_{max} can be defined by:

$$I_{max} = \frac{V_{ref}}{10\ R_S}$$

Figure 2: Principle Operating Sequence

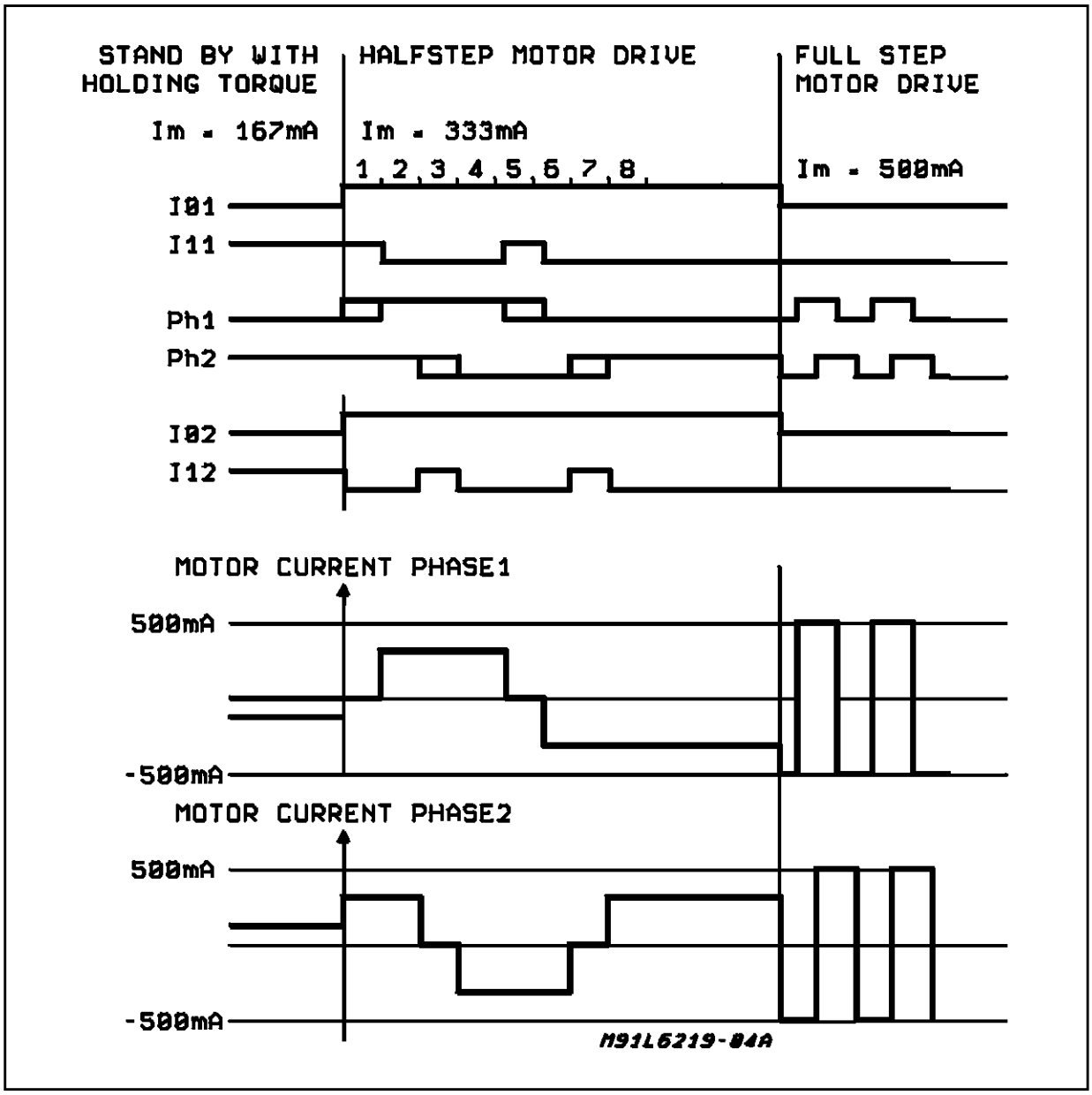

Single-pulse Generator

The pulse generator is a monostable triggered on the positive going edge of the comparator output. The monostable output is high during the pulse time, t_{off} , which is determined by the time components R_t and C_t.

$$t_{off} = 1.1 \bullet R_t C_t$$

The single pulse switches off the power feed to the motor winding, causing the winding current to decrease during t_{off}.

If a new trigger signal should occur during t_{off}, it is ignored.

Output Stage

The output stage contains four Darlington transistors (source drivers) four saturated transistors (sink drivers) and eight diodes, connected in two H bridge.

The source transistors are used to switch the power supplied to the motor winding, thus driving a constant current through the winding.

It should be noted however, that is not permitted to short circuit the outputs.

Internal circuitry is added in order to increase the accuracy of the motor current particularly with low current levels.

V_S, V_{SS}, V_{Ref}
The circuit will stand any order of turn-on or turn-off the supply voltages V_S and V_{SS}. Normal dV/dt values are then assumed.
Preferably, V_{Ref} should be tracking V_{SS} during power-on and power-off if V_S is established.

APPLICATION INFORMATIONS (Note 1)
Some stepper motors are not designed for continuous operation at maximum current. As the circuit drives a constant current through the motor, its temperature might increase exceedingly both at low and high speed operation.
Also, some stepper motors have such high core losses that they are not suited for switch mode current regulation.
Unused inputs should be connected to proper voltage levels in order to get the highest noise immunity.
As the circuit operates with switch mode current regulation, interference generation problems might arise in some applications. A good measure might then be to decouple the circuit with a 100nF capacitor, located near the package between power line and ground.
The ground lead between R_s, and circuit GND should be kept as short as possible.
A typical Application Circuit is shown in Fig. 3.
Note that C_t must be NPO type or similar else.
To sense the winding current, paralleled metal film resistors are recommended (R_s)

Note 1 - Other information is available as "Smart Power Development System":
Test board HWL6219 (Stepper driver)
Software SWL6219 (Floppy disc)

Figure 3: Typical Application Circuit. (Pin out referred to DIP24 package)

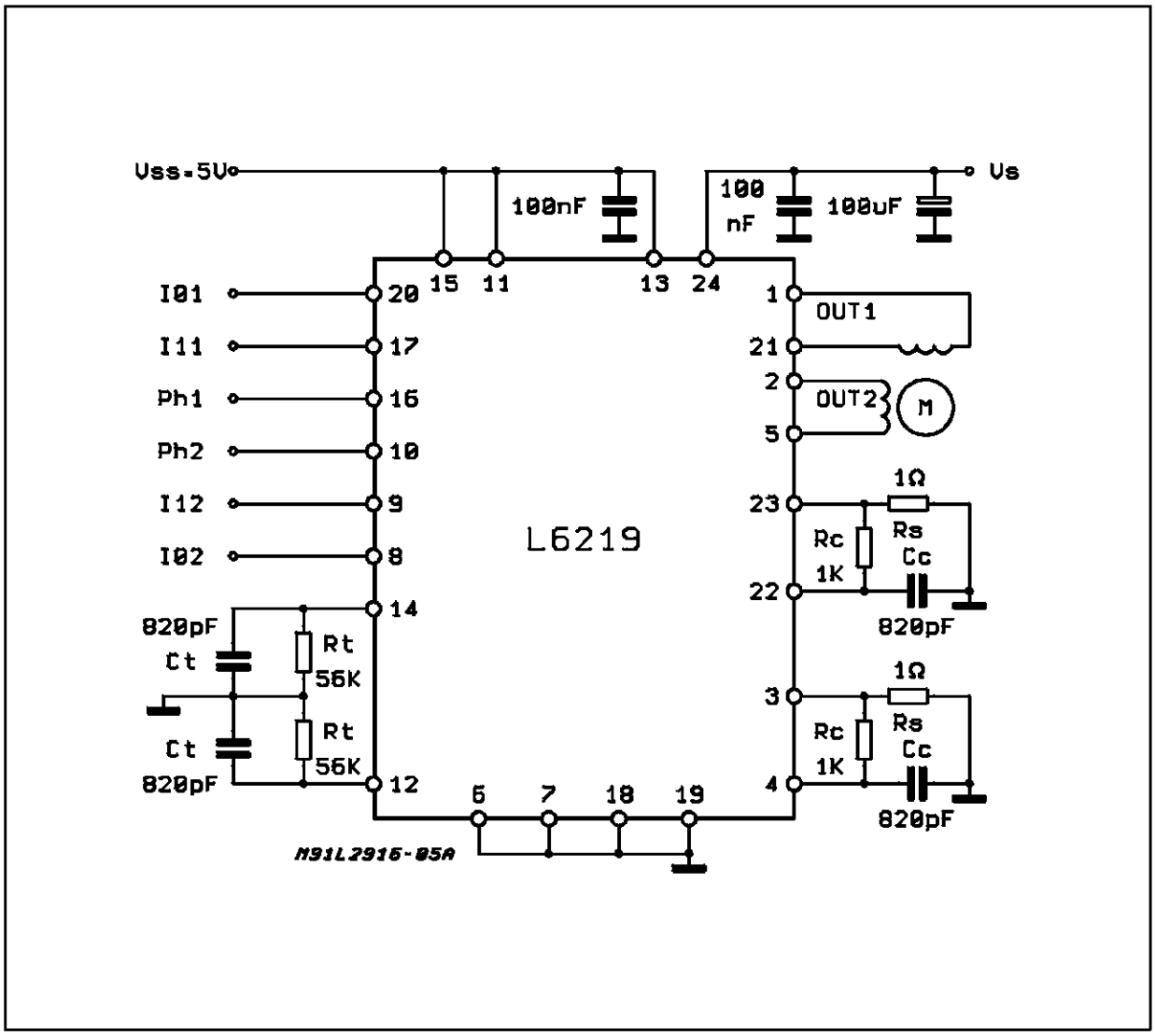

DIP24 PACKAGE MECHANICAL DATA

DIM.	mm			inch		
	MIN.	TYP.	MAX.	MIN.	TYP.	MAX.
a1		0.63			0.025	
b		0.45			0.018	
b1	0.23		0.31	0.009		0.012
b2		1.27			0.050	
D			32.2			1.268
E	15.2		16.68	0.598		0.657
e		2.54			0.100	
e3		27.94			1.100	
F			14.1			0.555
I		4.445			0.175	
L		3.3			0.130	

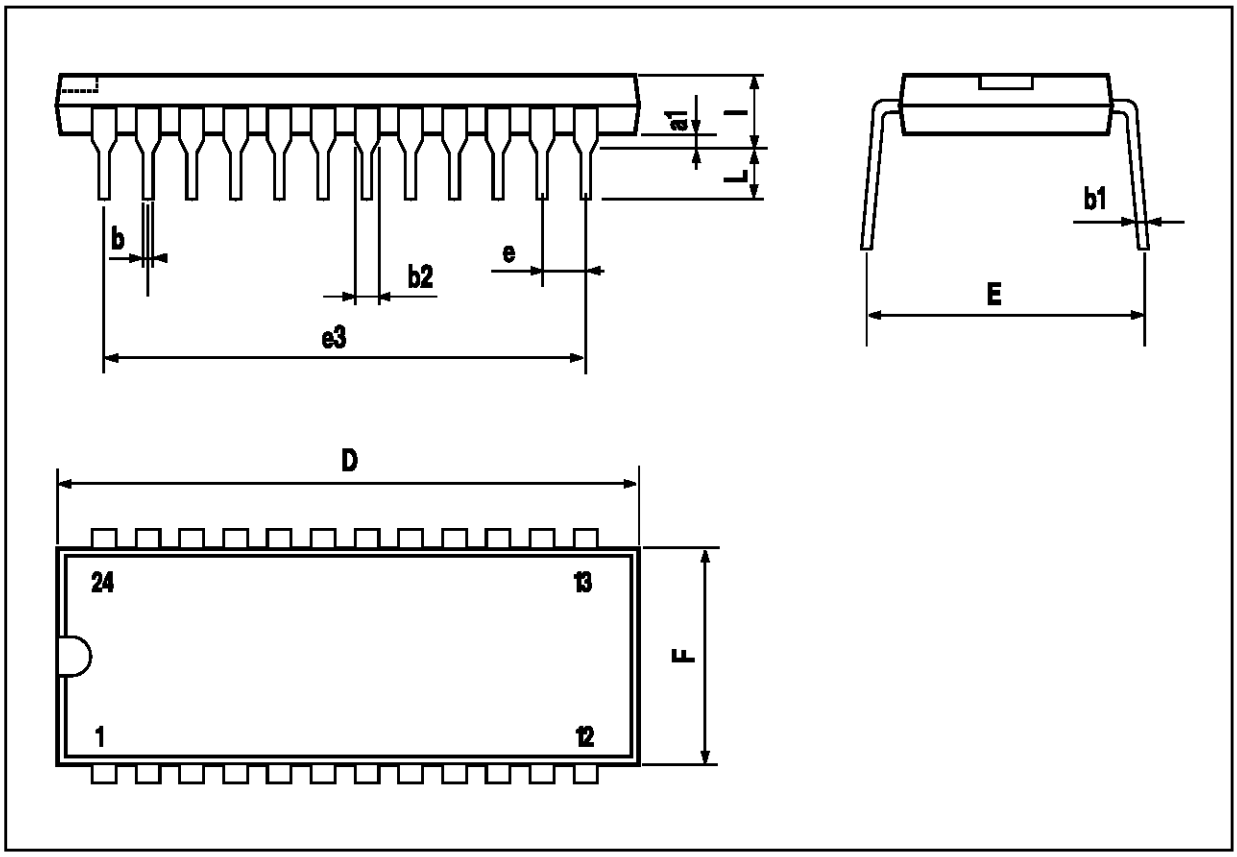

PLCC44 PACKAGE MECHANICAL DATA

DIM.	mm			inch		
	MIN.	TYP.	MAX.	MIN.	TYP.	MAX.
A	17.4		17.65	0.685		0.695
B	16.51		16.65	0.650		0.656
C	3.65		3.7	0.144		0.146
D	4.2		4.57	0.165		0.180
d1	2.59		2.74	0.102		0.108
d2		0.68			0.027	
E	14.99		16	0.590		0.630
e		1.27			0.050	
e3		12.7			0.500	
F		0.46			0.018	
F1		0.71			0.028	
G			0.101			0.004
M		1.16			0.046	
M1		1.14			0.045	

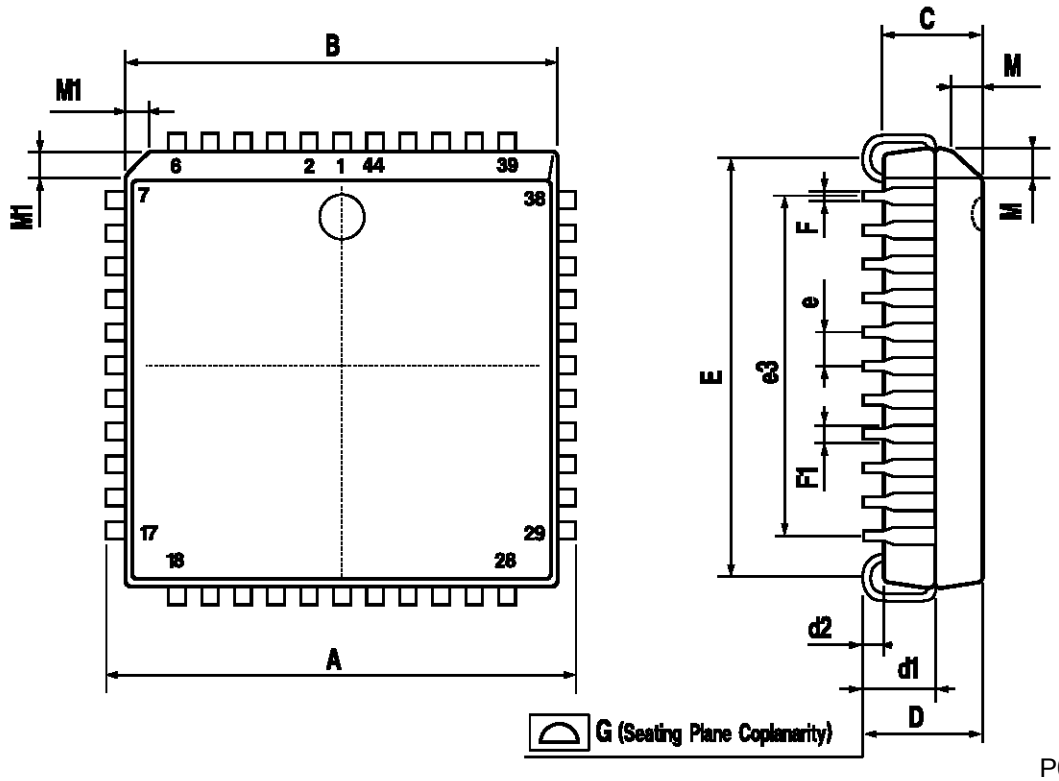

P027B

SO24 PACKAGE MECHANICAL DATA

DIM.	mm			inch		
	MIN.	TYP.	MAX.	MIN.	TYP.	MAX.
A	2.35		2.65	0.093		0.104
A1	0.10		0.30	0.004		0.012
A2			2.55			0.100
B	0.33		0.51	0.013		0.0200
C	0.23		0.32	0.009		0.013
D	15.20		15.60	0.598		0.614
E	7.40		7.60	0.291		0.299
e		1.27			0,050	
H	10.0		10.65	0.394		0.419
h	0.25		0.75	0.010		0.030
k	0° (min.), 8° (max.)					
L	0.40		1.27	0.016		0.050

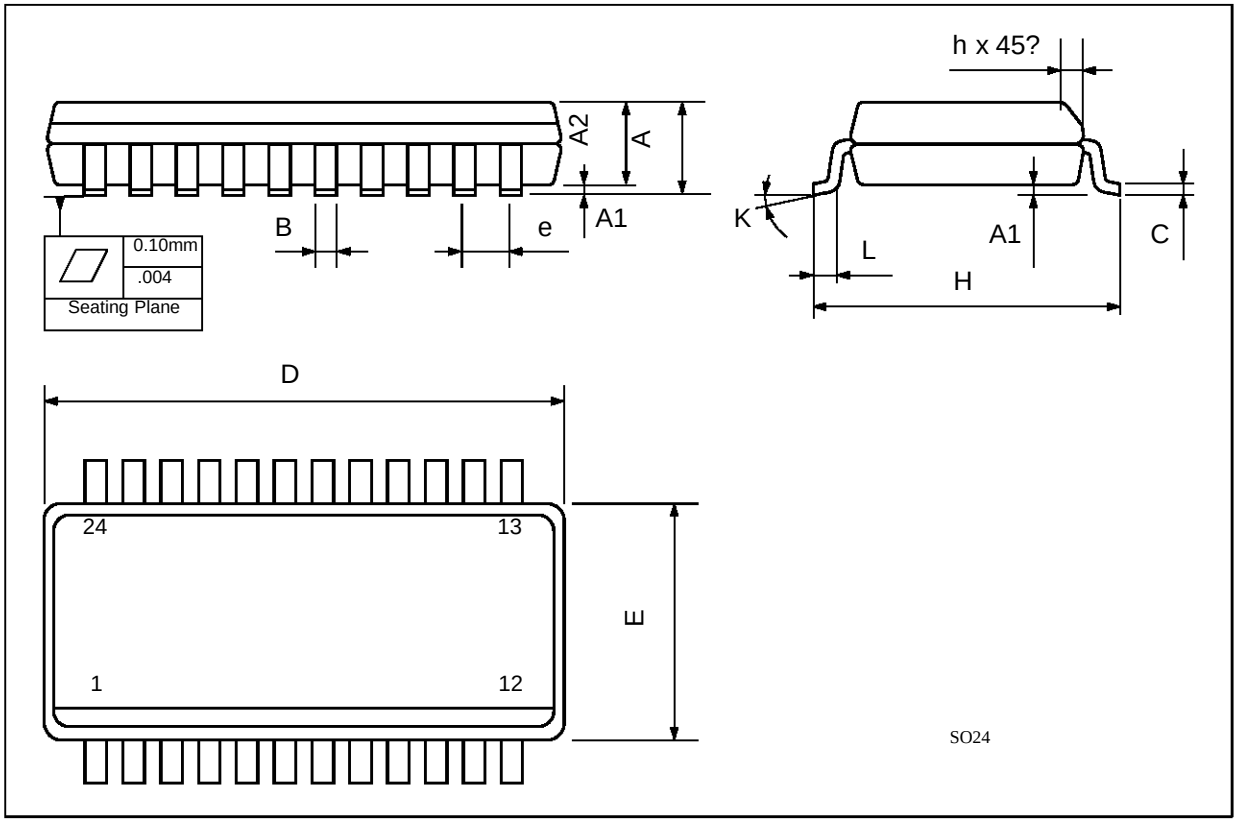

Information furnished is believed to be accurate and reliable. However, SGS-THOMSON Microelectronics assumes no responsibility for the consequences of use of such information nor for any infringement of patents or other rights of third parties which may result from its use. No license is granted by implication or otherwise under any patent or patent rights of SGS-THOMSON Microelectronics. Specifications mentioned in this publication are subject to change without notice. This publication supersedes and replaces all information previously supplied. SGS-THOMSON Microelectronics products are not authorized for use as critical components in life support devices or systems without express written approval of SGS-THOMSON Microelectronics.

© 1995 SGS-THOMSON Microelectronics - All Rights Reserved

SGS-THOMSON Microelectronics GROUP OF COMPANIES
Australia - Brazil - France - Germany - Hong Kong - Italy - Japan - Korea - Malaysia - Malta - Morocco - The Netherlands - Singapore - Spain - Sweden - Switzerland - Taiwan - Thaliand - United Kingdom - U.S.A.

SGS-THOMSON MICROELECTRONICS

L6506
L6506D

CURRENT CONTROLLER FOR STEPPING MOTORS

ADVANCE DATA

DESCRIPTION

The L6506/D is a linear integrated circuit designed to sense and control the current in stepping motors and similar devices. When used in conjunction with the L293, L298, L7150, L6114/L6115, the chip set forms a constant current drive for an inductive load and performs all the interface function from the control logic thru the power stage.

Two or more devices may be synchronized using the sync pin. In this mode of operation the oscillator in the master chip sets the operating frequency in all chips.

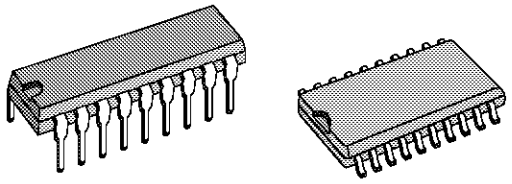

DIP-18 **SO-20**

ORDERING NUMBERS:
L6506 L6506D1

BLOCK DIAGRAM (pin's number referred to DIP-18)

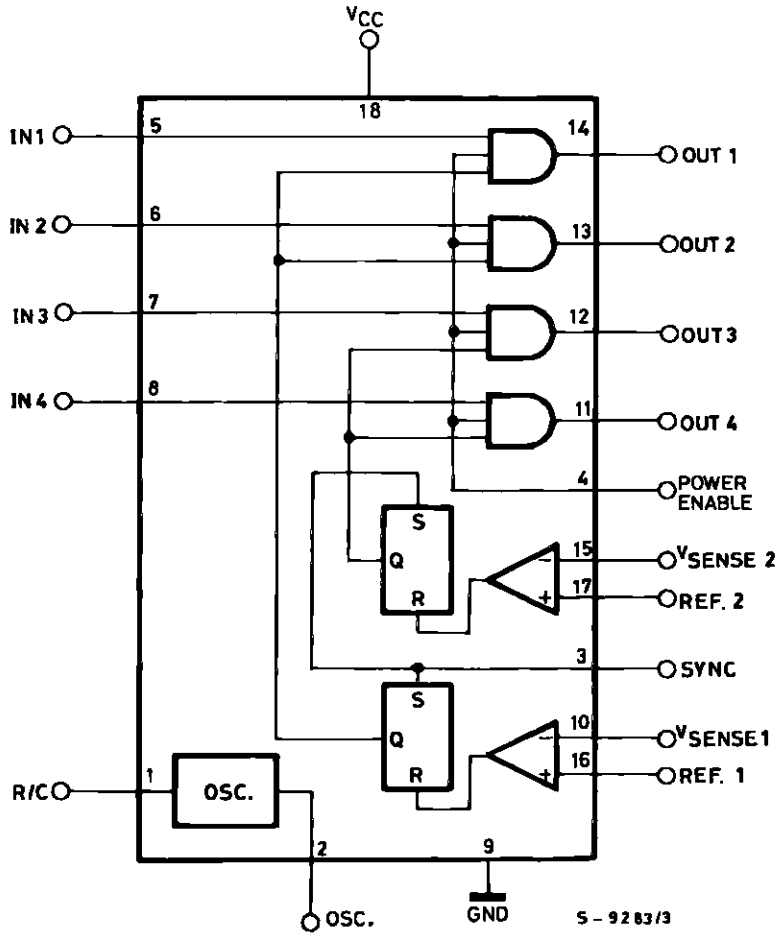

This is advanced information on a new product now in development or undergoing evaluation. Details are subject to change without notice.

PIN CONNECTIONS (top view)

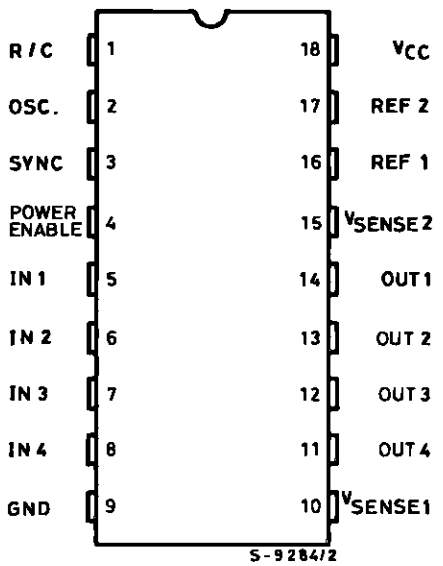

DIP18

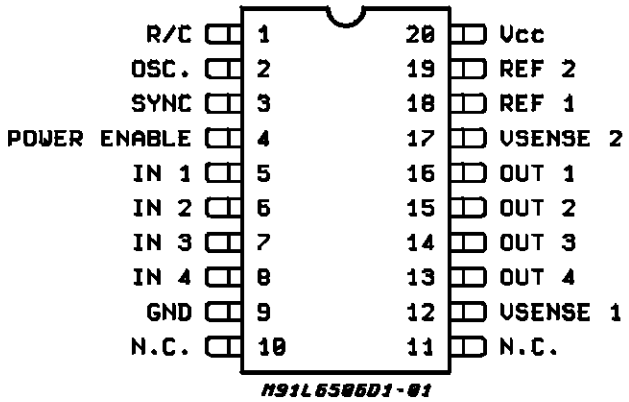

SO20

ABSOLUTE MAXIMUM RATINGS

Symbol	Parameter	Value	Unit
V_{CC}	Supply Voltage	10	V
V_i	Input Signals	7	V
P_{tot}	Total Power Dissipation (T_{amb} = 70°C) for DIP18 for SO20	1 0.8	W W
T_j	Junction Temperature	150	°C
T_{stg}	Storage Temperature	-40 to 150	°C

THERMAL DATA

Symbol	Parameter		DIP18	SO20	Unit
$R_{th\ j\text{-}amb}$	Thermal Resistance Junction-ambient	Max.	80	100	°C/W

ELECTRICAL CHARACTERESTICS (V_{CC} = 5.0V, T_{amb} = 25°C; unless otherwise noted)

Symbol	Parameter	Test Conditions	Min.	Typ.	Max.	Unit
V_{CC}	Supply Voltage		4.5		7	V
I_{CC}	Quiescent Supply Current	V_{CC} = 7V			25	mA

COMPARATOR SECTION

Symbol	Parameter	Test Conditions	Min.	Typ.	Max.	Unit
V_{IN}	Input Voltage Range	V_{sense} Inputs	–0.3		3	V
V_{IO}	Input Offset Voltage	V_{IN} = 1.4V			±5.0	mV
I_{IO}	Input Offset Current				±200	nA
I_{IB}	Input Bias Current				1	µA
	Response time	V_{REF} = 1.4V V_{SENS} = 0 to 5V		0.8	1.5	µs

ELECTRICAL CHARACTERISTICS (continued)

COMPARATOR SECTION PERFORMANCE (Over Operating Temperature Range)

Symbol	Parameter	Test Condtions	Min.	Typ.	Max.	Unit
V_{IO}	Input Offset Voltage	V_{IN} = 1.4V			±20	mV
I_{IO}	Input Offset Curent				±500	nA

LOGIC SECTION (Over Operating Temperature Range - TTL compatible inputs & outputs)

Symbol	Parameter	Test Condtions	Min.	Typ.	Max.	Unit
V_{IH}	Input High Voltage		2		V_s	V
V_{IL}	Input Low Voltage				0.8	V
V_{OH}	Output High Voltage	V_{CC} = 4.75V I_{OH} = 400µA	2	3.5		V
V_{OL}	Ouptut Low Voltage	V_{CC} = 4.75V I_{OH} = 4mA		0.25	0.4	V
I_{OH}	Ouput Source Current - Outputs 1 - 4	V_{CC} = 4.75V	2.75			mA

OSCILLATOR

Symbol	Parameter	Test Condtions	Min.	Typ.	Max.	Unit
f_{osc}	Frequency Range		5		70	KHz
V_{thL}	Lower Threshold Voltage			0.33 V_{CC}		V
V_{thH}	Higher Threshold Voltage			0.66 V_{CC}		V
R_i	Internal Discharge Resistor		0.7	1	1.3	kΩ

CIRCUIT OPERATION

The L6506 is intended for use with dual bridge drivers, such as the L298, quad darlington arrays, such as the L7150, quad DMOS array such as L6114-L6115, or discrete power transistors to drive stepper motors and other similar loads. The main function of the device is to sense and control the current in each of the load windings.

A common on-chip oscillator drives the dual chopper and sets the operating frequency for the pulse width modulated drive. The RC network on pin 1 sets the operating frequency which is given by the equation :

$$f = \frac{1}{0.69\,RC} \quad \text{for } R > 10\text{ K}$$

The oscillator provides pulses to set the two flip-flops which in turn cause the outputs to activate the drive. When the current in the load winding reaches the programmed peak value, the voltage across the sense resistor (R_{sense}) is equal to V_{ref} and the corresponding comparator resets its flip-flop interrupting the drive current until the next oscillator pulse occurs. The peak current in each winding is programmed by selecting the value of the sense resistor and V_{ref}. Since separate inputs are provided for each chopper, each of the loads may be programmed independently allowing the device to be used to implement microstepping of the motor. Lower threshold of L6506's oscillator is 1/3 V_{CC}. Upper threshold is 2/3 V_{CC} and internal discharge resistor is 1 KΩ ± 30 %.

Ground noise problems in multiple configurations can be avoided by synchronizing the oscillators. This may be done by connecting the sync pins of each of the devices with the oscillator output of the master device and connecting the R/C pin of the unused oscillators to ground.

The equations for the active time of the sync pulse (T2), the inactive time of the sync signal (T1) and the duty cycle can be found by looking at the figure 1 and are :

$$T2 = 0.69\,C1\,\frac{R1\,R_{IN}}{R1 + R_{IN}} \qquad (1)$$

$$T1 = 0.69\,R1\,C1 \qquad (2)$$

$$DC = \frac{T2}{T1 + T2} \qquad (3)$$

By substituting equations 1 and 2 into equation 3 and solving for the value of R1 the following equations for the external components can be derived :

$$R1 = \left(\frac{1}{DC} - 2\right) R_{IN} \quad (4)$$

$$C1 = \frac{T1}{0.69\,R1} \quad (5)$$

Looking at equation 1 it can easily be seen that the minimum pulse width of T2 will occur when the value of R1 is at its minimum and the value of R1 at its maximum. Therefore, when evaluating equation 4 the minimum value for R1 of 700Ω (1 KΩ – 30 %) should be used to guarantee the required pulse width.

Figure 1 : Oscillator Circuit and Waveforms.

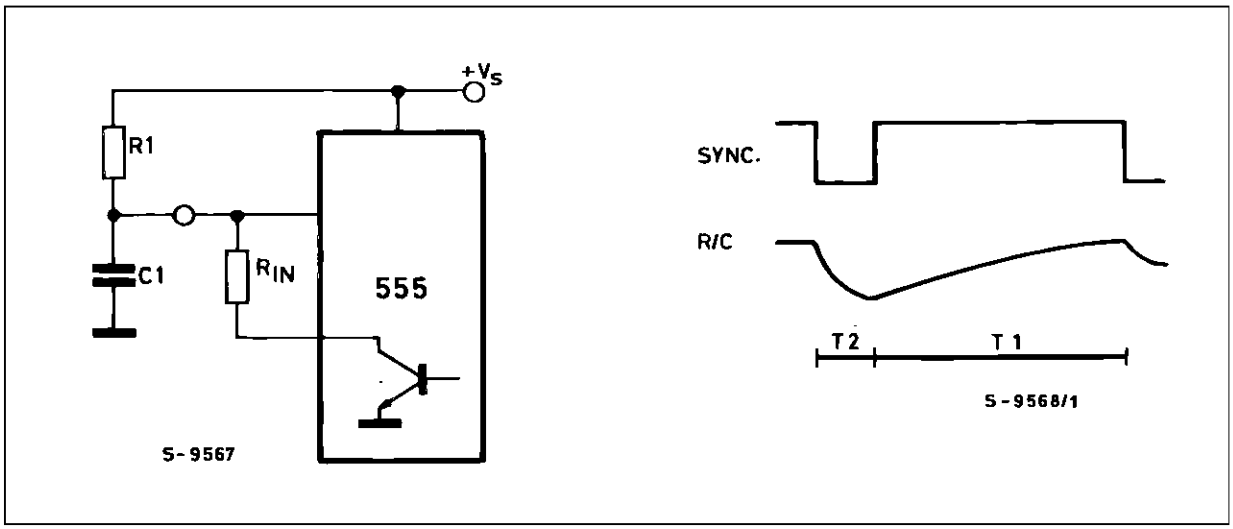

APPLICATIONS INFORMATION

The circuits shown in figure 2 use the L6506 to implement constant current drives for stepper motors. Figure 2 shows the L6506 used with the L298 to drive a 2 phase bipolar motor. The peak current can be calculated using the equation :

$$I_{peak} = \frac{V_{ref}}{R_{sense}}$$

The circuit of Fig.2 can be used in applications requiring different peak and hold current values by modifying the reference voltage.

The L6506 may be used to implement either full step or half step drives. In the case of 2 phase bipolar stepper motor applications, if a half step drive is used, the bridge requires an additional input to disable the power stage during the half step. If used in conjunction with the L298 the enable inputs may be used for this purpose.

For quad darlington array in 4 phase unipolar motor applications half step may be implemented using the 4 phase inputs.

The L6506 may also be used to implement microstepping of either bipolar or unipolar motors.

Figure 2 : Application Circuit Bipolar Stepper Motor Driver. (pin's number referred to DIP18)

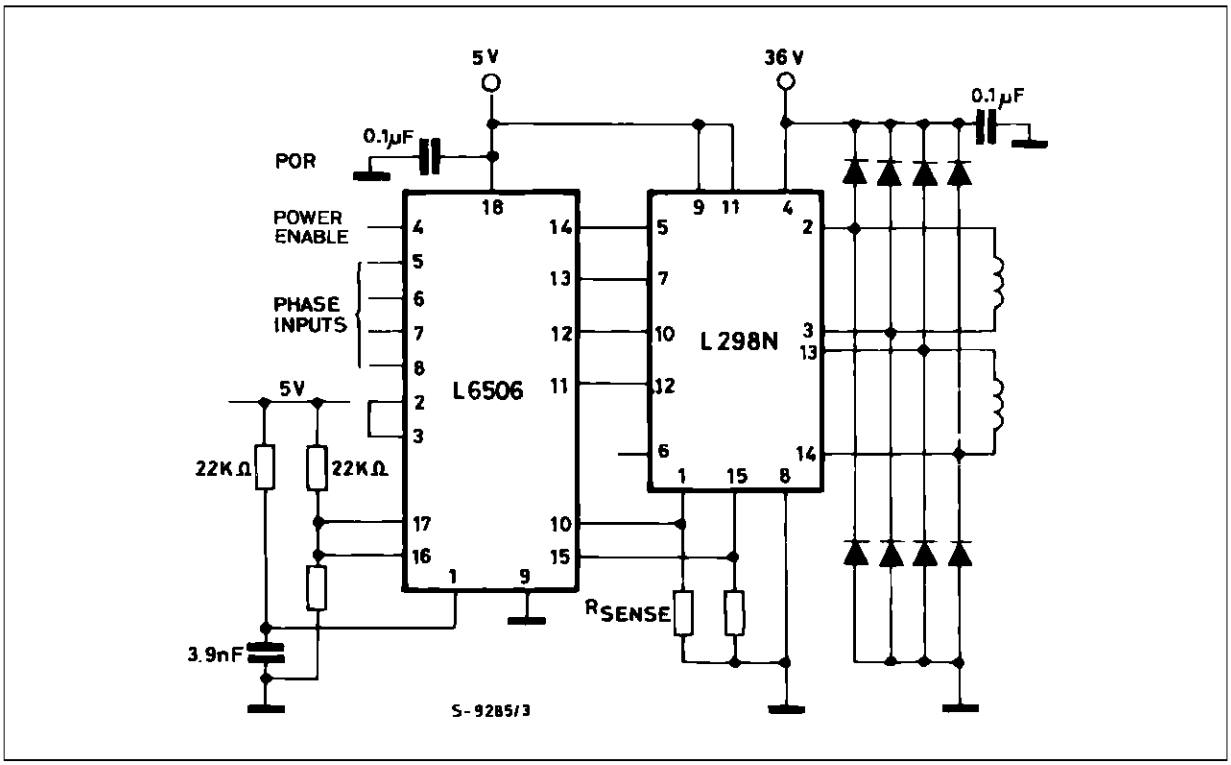

DIP18 PACKAGE MECHANICAL DATA

DIM.	mm			inch		
	MIN.	TYP.	MAX.	MIN.	TYP.	MAX.
a1	0.254			0.010		
B	1.39		1.65	0.055		0.065
b		0.46			0.018	
b1		0.25			0.010	
D			23.24			0.915
E		8.5			0.335	
e		2.54			0.100	
e3		20.32			0.800	
F			7.1			0.280
I			3.93			0.155
L		3.3			0.130	
Z		1.27	1.59		0.050	0.063

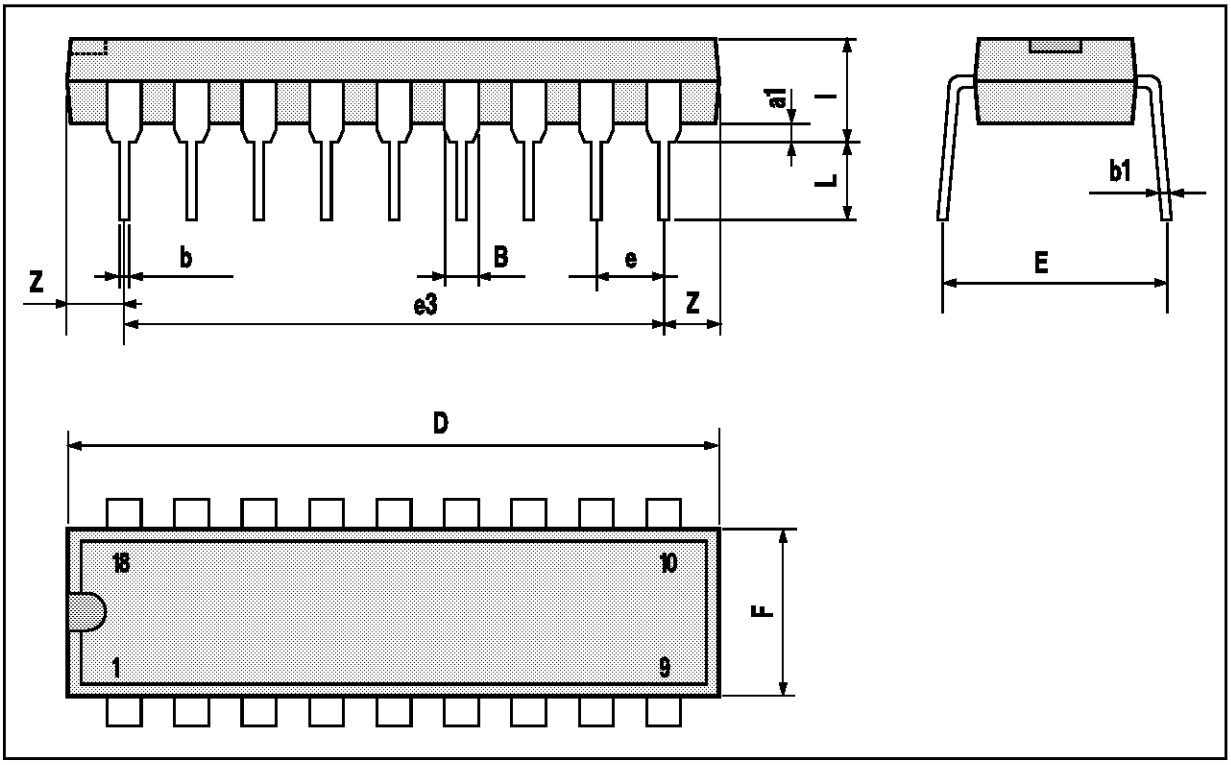

SO20 PACKAGE MECHANICAL DATA

DIM.	mm			inch		
	MIN.	TYP.	MAX.	MIN.	TYP.	MAX.
A			2.65			0.104
a1	0.1		0.3	0.004		0.012
a2			2.45			0.096
b	0.35		0.49	0.014		0.019
b1	0.23		0.32	0.009		0.013
C		0.5			0.020	
c1	45 (typ.)					
D	12.6		13.0	0.496		0.512
E	10		10.65	0.394		0.419
e		1.27			0.050	
e3		11.43			0.450	
F	7.4		7.6	0.291		0.299
L	0.5		1.27	0.020		0.050
M			0.75			0.030
S	8 (max.)					

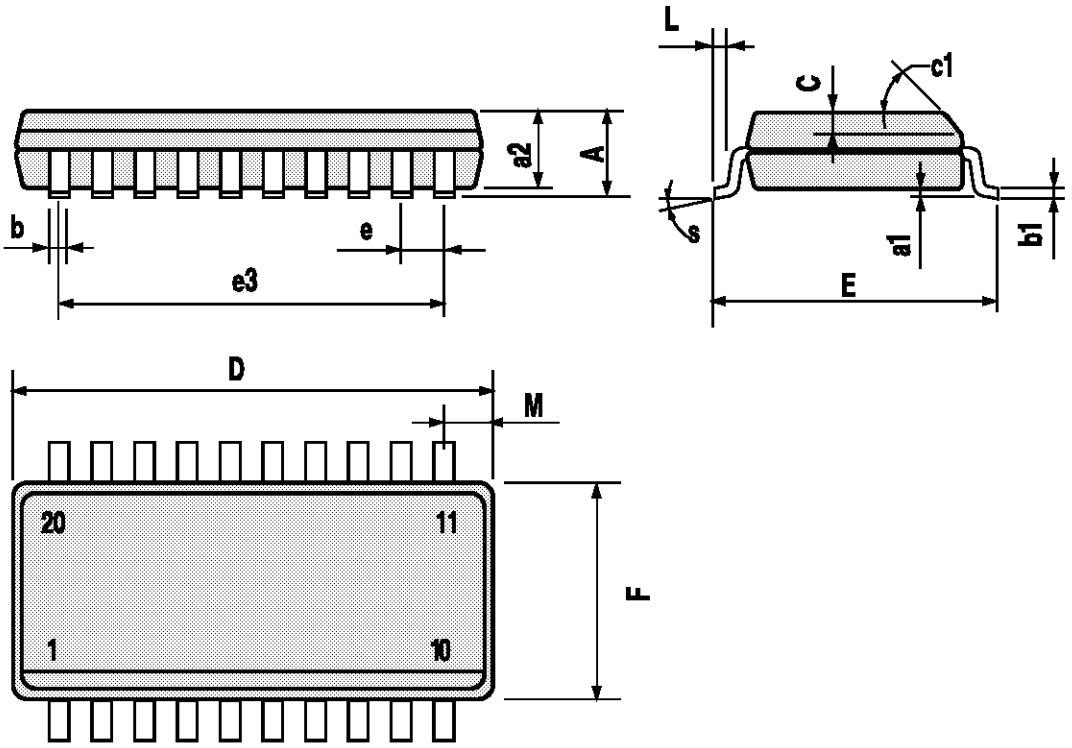

Information furnished is believed to be accurate and reliable. However, SGS-THOMSON Microelectronics assumes no responsibility for the consequences of use of such information nor for any infringement of patents or other rights of third parties which may result from its use. No license is granted by implication or otherwise under any patent or patent rights of SGS-THOMSON Microelectronics. Specifications mentioned in this publication are subject to change without notice. This publication supersedes and replaces all information previously supplied. SGS-THOMSON Microelectronics products are not authorized for use as critical components in life support devices or systems without express written approval of SGS-THOMSON Microelectronics.

© 1994 SGS-THOMSON Microelectronics - All Rights Reserved

SGS-THOMSON Microelectronics GROUP OF COMPANIES
Australia - Brazil - France - Germany - Hong Kong - Italy - Japan - Korea - Malaysia - Malta - Morocco - The Netherlands - Singapore - Spain - Sweden - Switzerland - Taiwan - Thaliand - United Kingdom - U.S.A.

SGS-THOMSON MICROELECTRONICS

TDA7272A

HIGH PERFORMANCE MOTOR SPEED REGULATOR

- TACHIMETRIC SPEED REGULATION WITH NO NEED FOR AN EXTERNAL SPEED PICK-UP
- V/I SUPPLEMENTARY PREREGULATION
- DIGITAL CONTROL OF DIRECTION AND MOTOR STOP
- SEPARATE SPEED ADJUSTMENT
- 5.5V TO 18V OPERATING SUPPLY VOLTAGE
- 1A PEAK OUTPUT CURRENT
- OUTPUT CLAMP DIODES INCLUDED
- SHORT CIRCUIT CURRENT PROTECTION
- THERMAL SHUT DOWN WITH HYSTERESIS
- DUMP PROTECTION (40V)
- ESD PROTECTION

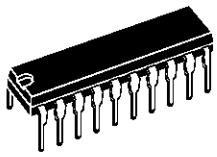

Powerdip(16+2+2)

ORDERING NUMBER: TDA7272A

DESCRIPTION

TDA7272A are high performance motor speed controller for small power DC motors as used in cassette players.

Using the motor as a digital tachogenerator itself the performance of true tacho controlled systems is reached.

A dual loop control circuit provides long term stability and fast settling behaviour.

BLOCK DIAGRAM

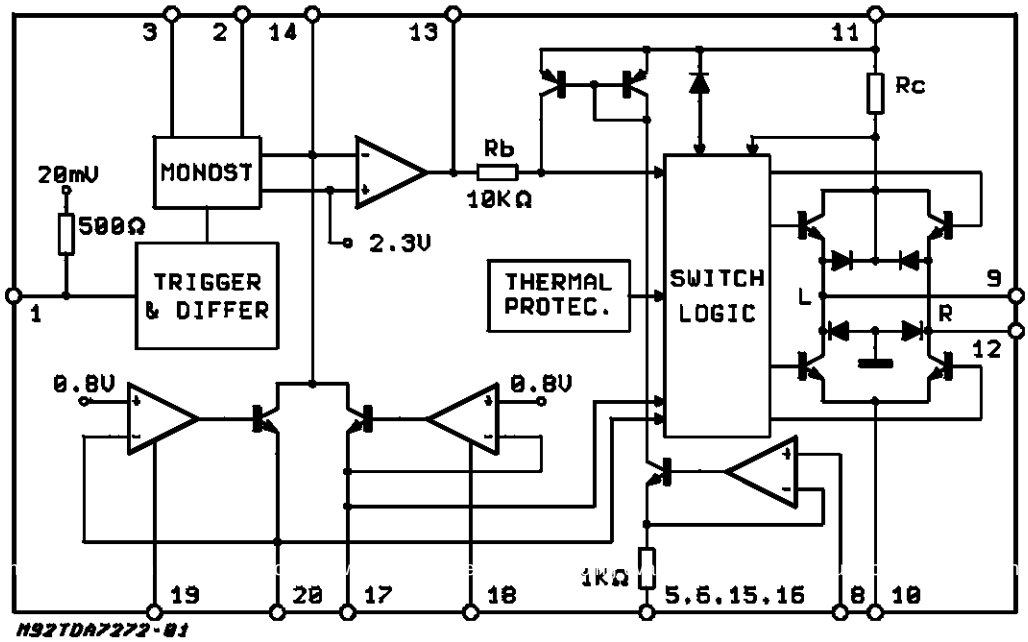

ABSOLUTE MAXIMUM RATINGS

Symbol	Parameter	Value	Unit
V_S	DC Supply Voltage	24	V
V_S	Dump Voltage (300ms)	40	V
I_O	Output Current	Internally limited	
P_{tot}	Power Dissipation at T_{pins} = 90°C at T_{amb} = 70°C	4.3 1	W W
T_{op}	Operating Temperature Range	-40 to 85	°C
T_{stg}	Storage Temperature	-40 to 150	°C

PIN CONNECTION (Top view)

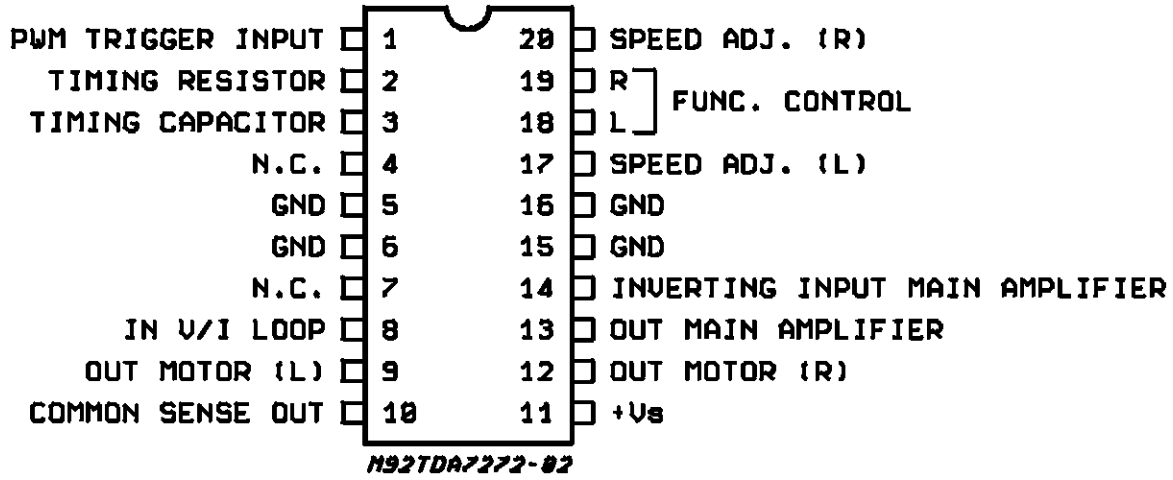

THERMAL DATA

Symbol	Parameter		Value	Unit
$R_{th\ j\text{-}amb}$	Thermal Resistance Junction-ambient	max.	80	°C/W
$R_{th\ j\text{-}pins}$	Thermal Resistance Junction-pins	max.	14	°C/W

TEST CIRCUIT

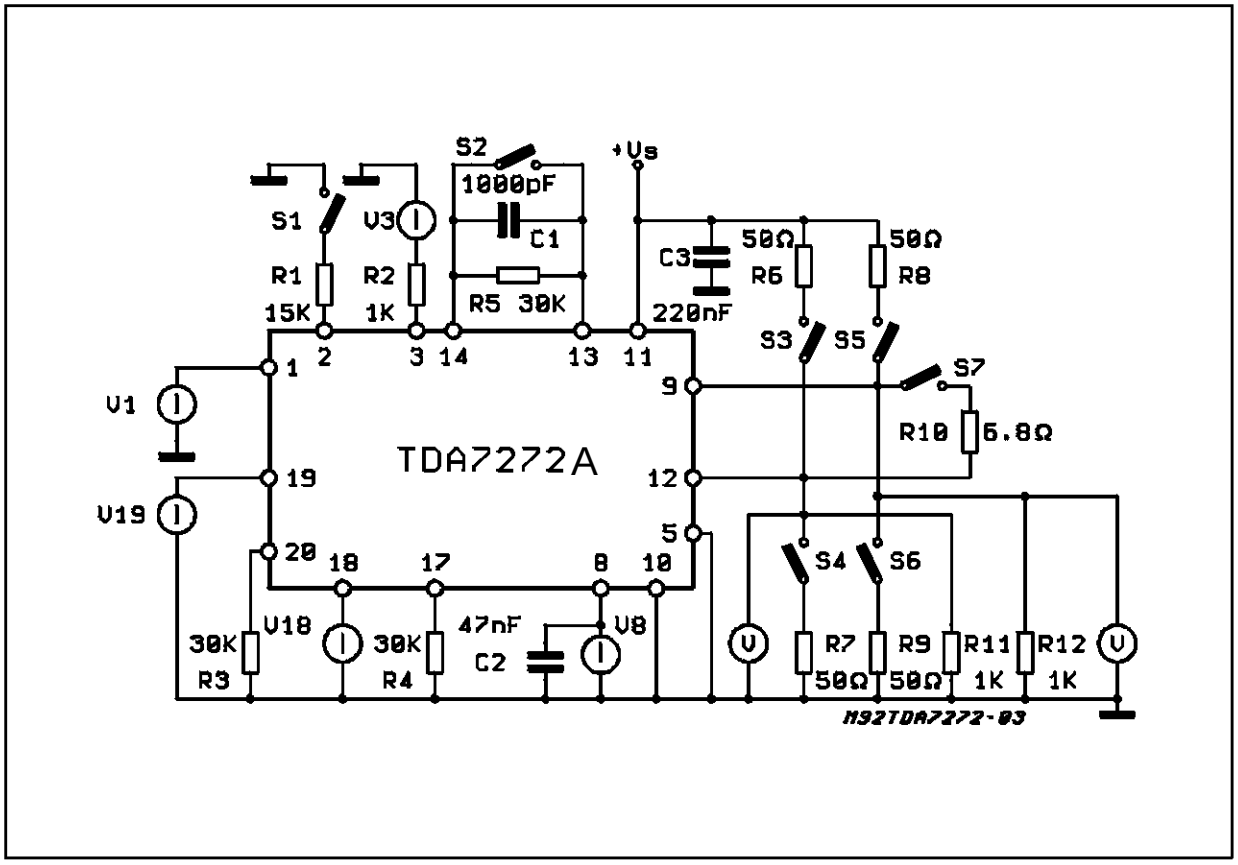

ELCTRICAL CHARACTERISTICS (T_{amb} = 25°C; V_S = 13.5V unless otherwise specified)

Symbol	Parameter	Test Conditions	Min.	Typ.	Max.	Unit
V_S	Operating Supply Voltage		5.5		18	V
I_S	Supply Current	No load		5	12	mA
OUTPUT STAGE						
I_O	Output Currente Pulse		1			A
I_O	Output Currente Continuous		250			mA
$V_{10,9,12}$	Voltage Drop	I_O = 250mA		1.2	1.5	V
$V_{11,9,12}$	Voltage Drop	I_O = 250mA		1.7	2	V
MAIN AMPLIFIER						
R_{14}	Input Resistance		100			KΩ
I_b	Bias Current			50		nA
V_{OFF}	Offset Voltage			1	5	mV
V_R	Reference Voltage	Internal at non inverting input		2.3		V

ELECTRICAL CHARACTERISTICS (Continued)

Symbol	Parameter	Test Conditions	Min.	Typ.	Max.	Unit
CURRENT SENSE AMPLIFIER						
R_8	Input Resistance		100			KΩ
G_L	Loop Gain			9		
TRIGGER AND MONOSTABLE STAGE						
V_{IN1}	Input Allowed Voltage		-0.7		3	V
R_{IN1}	Input Resistance			500		Ω
$V_{T\ Low}$	Trigger Level			0		V
$V_{T\ B}$	Bias Voltage (pin 1)		15	20	25	mV
$V_{T\ H}$	Trigger Histeresis			10		mV
$V_{2\ REF}$	Reference Voltage		750	800	850	mV
SPEED PROGRAMMING, DIRECTION CONTROL LOGIC AND CURRENT SOURCE PROGRAMMING						
$V_{18,19\ Low}$	Input Low Level				0.7	V
$V_{18,19\ High}$	Input High Level		2			V
$I_{18,19}$	Input Current	$0 < V_{18,19} < V_S$		2		µA
$V_{17,20\ REF}$	Reference Voltage		735	800	865	mV

The TDA7272A novel applied solution is based on a tachometer control system without using such extra tachometer system. The information of the actual motor speed is extracted from the motor itself. A DC motor with an odd number of poles generates a motor current which contains a fixed number of discontinuities within each rotation. (6 for the 3 pole motor example on fig. 1)

Deriving this inherent speed information from the motor current, it can be used as a replacement of a low resolution AC tachometer system. Because the settling time of the control loop is limited on principle by the resolution in time of the tachometer, this control principle offers a poor reaction time for motors with a low number of poles. The realized circuit is extended by a second feed forward loop in order to improve such system by a fast auxiliary control path.

This additional path senses the mean output current and varies the output voltage according to the voltage drop across the inner motor resistance. Apart from a current averaging filter, there is no delay in such loop and a fast settling behaviour is reached in addition to the long term speed motor accuracy.

Figure 1: Equivalent of a 3 Pole DC Motor (a) and Typical motor Current Waveform (b).

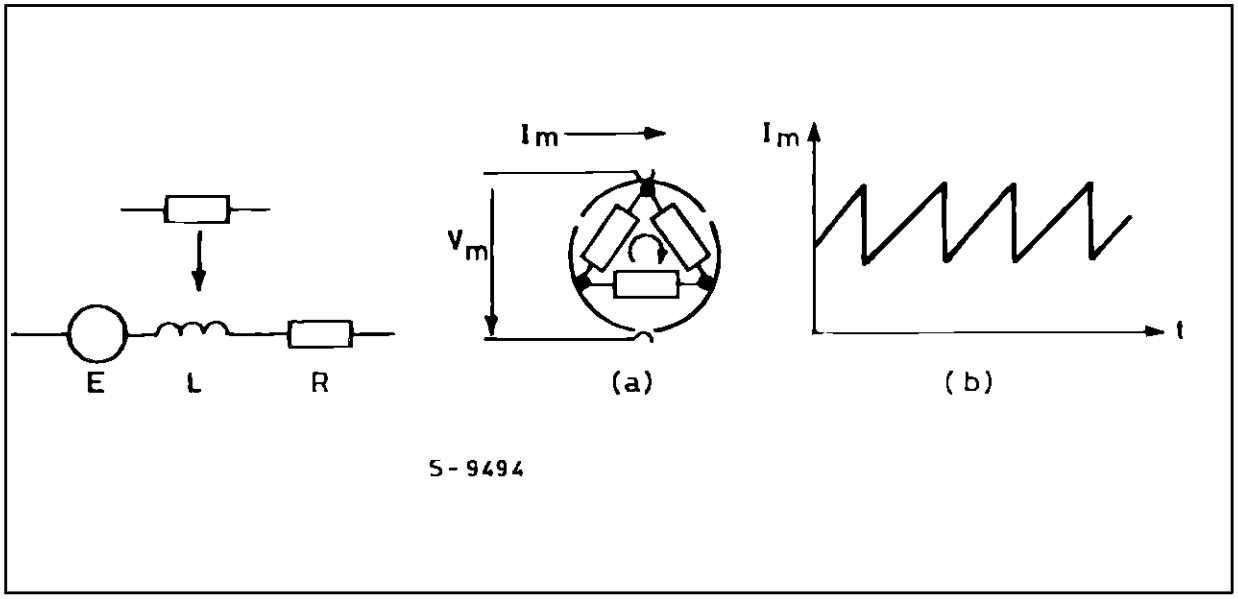

BLOCK DESCRIPTION

The principle structure of the element is shown in fig. 2. As to be seen, the motor speed information is derived from the motor current sense drop across the resistors R_S ; capacitor CD together with the input impedance of 500 Ω at pin 1 realizes a high pass filter.

This pin is internally biased at 20 mV, each negative zero transition switches the input comparator. A 10 mV hysteresis improves the noise immunity.

The trigger circuit is followed by an internal delay time differentiator.

Thus, the system becomes widely independent of the applied waveform at pin 1, the differentiator triggers a monostable circuit which provides a constant current duration. Both, output current magnitude and duration T, are adjustable by external elements CT and RT.

The monostable is retriggerable ; this function prevents the system from fault stabilization at higher harmonics of the nominal frequency.

The speed programming current is generated by two separate external adjustable current sources. A corresponding digital input signal enables each current source for left or right rotation direction. Resistor RP1 and RP2 define the speed, the logical inputs are at pin 18 and 19.

At the inverting input (pin 14) of the main amplifier the reference current is compared with the pulsed monostable output current.

For the correct motor speed, the reference current matches the mean value of the pulsed monostable current. In this condition the charge of the feedback capacitor becomes constant.

Figure 2: Application Circuit.

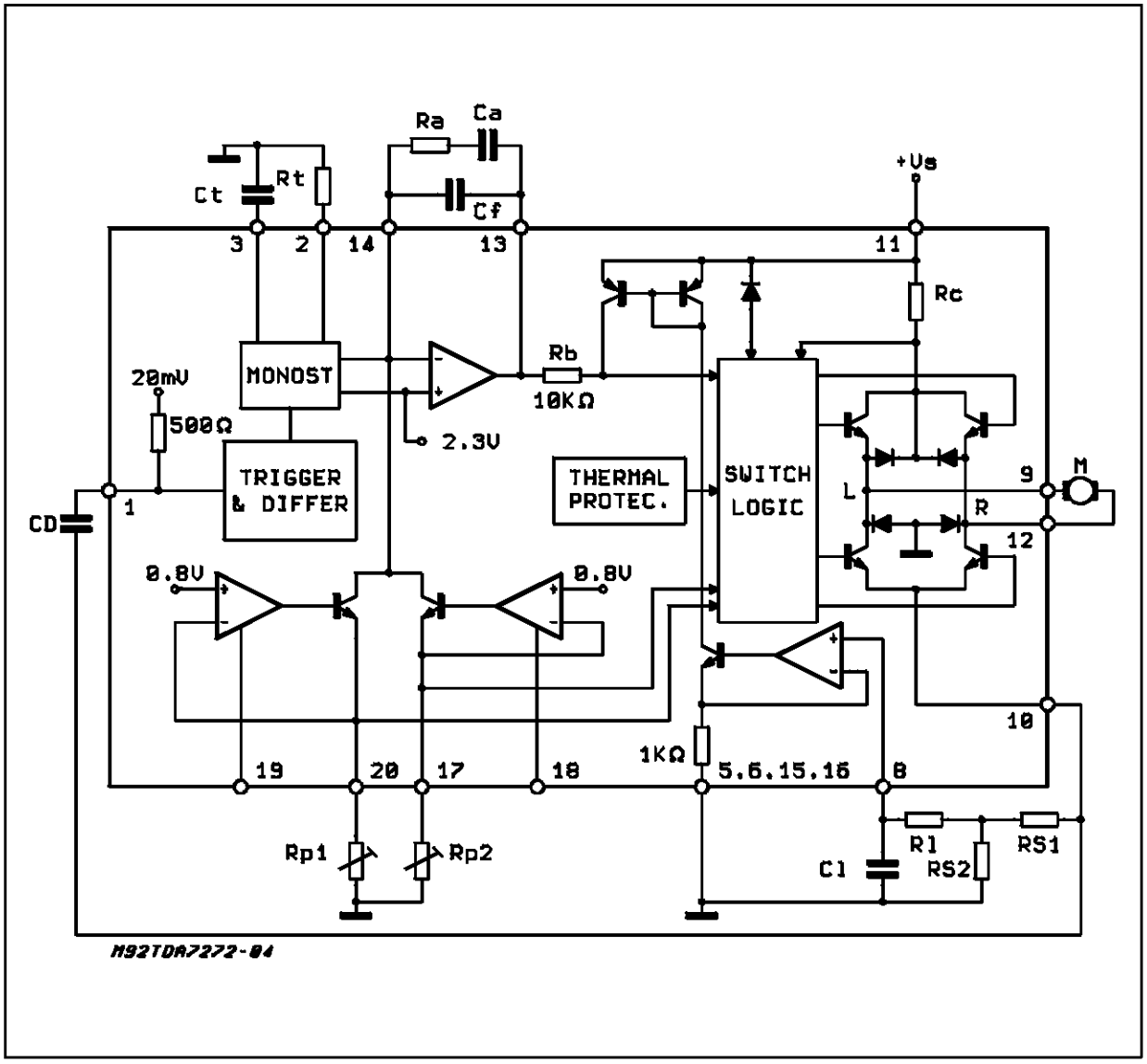

The speed n of a k pole motor results :

$$n = \frac{10.435}{C_T\, k\, R_P}$$

and becomes independent of the resistor RT which only determines the current level and the duty cycle which should be 1 : 1 at the nominal speed for minimum torque ripple.

The second fast loop consists of a voltage to current converter which is driven at pin 8 by the low pass filter R_L, C_L. The output current at this stage is injected by a PNP current mirror into the inner resistor R_B. So the driving voltage of the output stage consists of the integrator output voltage plus the fast loop voltage contribution across R_B.

The power output stage realizes different modes depending on the logic status at pin 18 and 19.

- Normal operation for left and right mode : each upper TR of the bridge is used as voltage follower whereas the lower acts as a switch.
- Stop mode where the upper half is open and the lower is conductive.
- High impedance status where all power elements are switched-off.

The high impedance status is also generated when the supply voltage overcomes the 5 V to 20 V operating range or when the chip temperature exceeds 150 °C.

A short circuit protection limits the output current at 1.5 A. Integrated diodes clamp spikes from the inductive load both at V_{CC} and ground.

The reference voltages are derived from a common bandgap reference. All blocks are widely supplied by an internal 3.5 V regulator which provides a maximum supply voltage rejection.

PIN FUNCTION AND APPLICATION INFORMATION

PIN 1

Trigger input. Receives a proper voltage which contains the information of the motor speed. The waveform can be derived directly by the motor current (fig. 3). The external resistor generates a proper voltage drop. Together with the input resistance at pin 1 [$R_{IN}(1)$ = 500 Ω] the external capacitor C_D realize a high pass filter which differentiates the commutation spikes of the motor current. The trigger level is 0V.

The biasing of the pin 1 is 20 mV with a hysteresis of 10 mV. So the sensing resistance must be chosen high enough in order to obtain a negative spike of the least 30 mV on pin 1, also with minimum variation of motor current :

$$R_S \geq \frac{30mV}{\Delta I_{MOT}\ \text{min.}}$$

Such value can be too much high for the preregulation stage V-I and it could be necessary to split them into 2 series resistors $R_S = R_{S1} + R_{S2}$ (see fig. 4) as explained on pin 8 section.

The information can be taken also from an external tachogenerator. Fig. 5 shows various sources connections :

the input signal mustn't be lower than 0.7 V.

Figure 3.

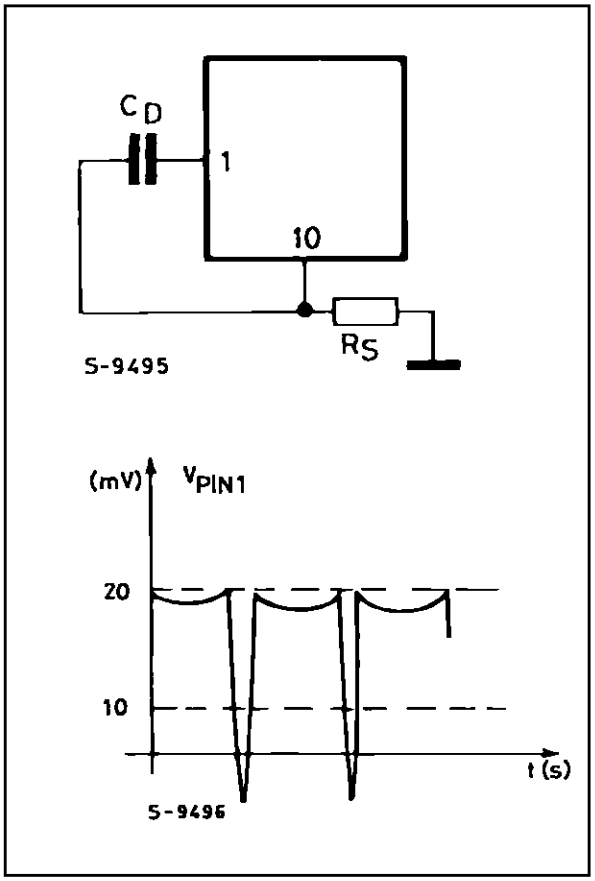

Figure 4.

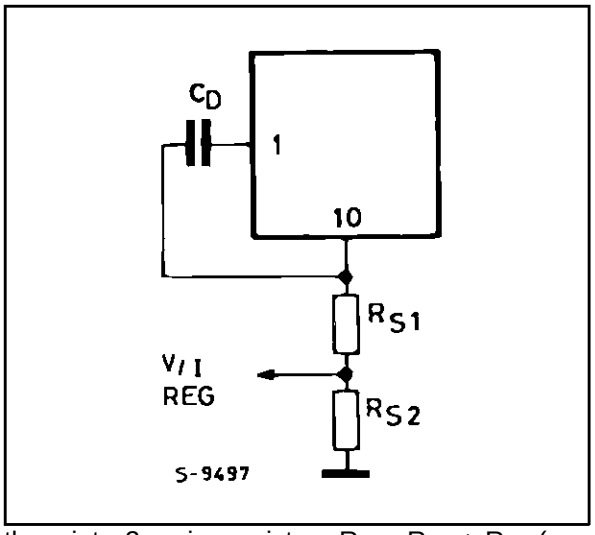

Figure 5.

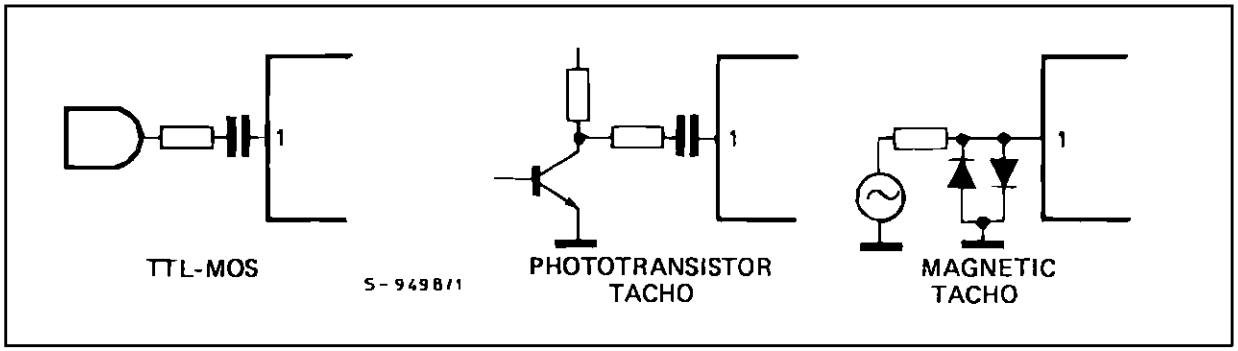

Pin 2

Timing resistor. An internal reference voltage (V2 = 0.8 V) gives possibility to fix by an external resistor (R_T), from this pin and ground, the output current amplitude of the monostable circuit, which will be reflected into the timing capacitor (pin 3) ; the typical value would be about 50 µ A.

Figure 6.

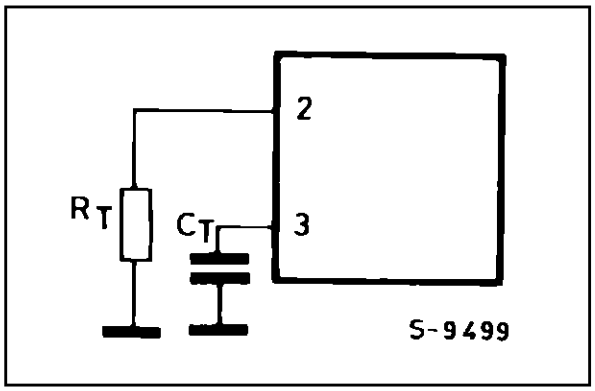

Pin 3

Timing capacitor. A constant current, determined by the pin 2 resistor, flowing into a capacitor between pin 3 and ground provides the output pulse width of the monostable circuit, the max voltage at pin 3 is fixed by an internal threshold : after reaching this value the capacitor is rapidly discharged and the pulse width is fixed to the value :

$$T_{on} = 2.88\ R_T\ C_T \text{ (fig. 6)}$$

Pin 4

Not connected.

Pin 5

Ground. Connected with pins 6, 15, 16.

Pin 6

Ground. Connected with pins 5, 15, 16.

Pin 7

Not connected.

Pin 8

Input V/I loop. Receives from pin 10, through a low pass filter, the voltage with the information of the current flowing into the motor and produces a negative resistance output :

$$R_{out} = -9\ R_S \text{ (fig. 7)}$$

Figure 7.

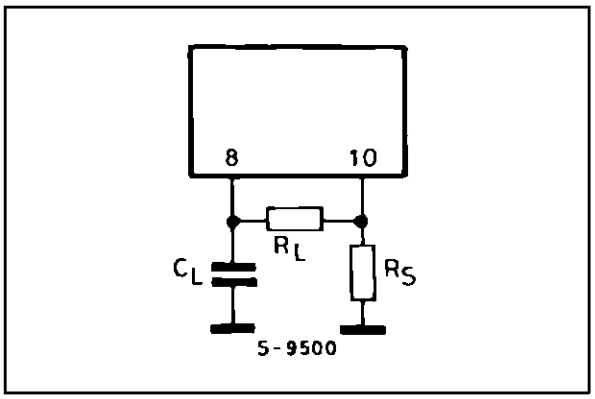

For compensating the motor resistance and avoiding instability :

$$R_S \leq \frac{R_{MOTOR}}{9}$$

The optimization of the resistor R_S for the tachometric control must not give a voltage too high for the V/I stage : one solution can be to divide in two parts, as shown in fig. 8, with :

$$R_{S2} = \frac{R_M}{10} \text{ and } R_{S1} + R_{S2} \geq \frac{30mV}{\Delta\ I\ mot\ min.}$$

(see pin 1 sect.)

The low pass filter R_L, C_L must be calculated in order to reduce the ripple of the motor commutation at least 20 dB. Another example of possible pins 10-8 connections is showed on fig. 9. A choke can be used in order to reduce the radiation.

Figure 8.

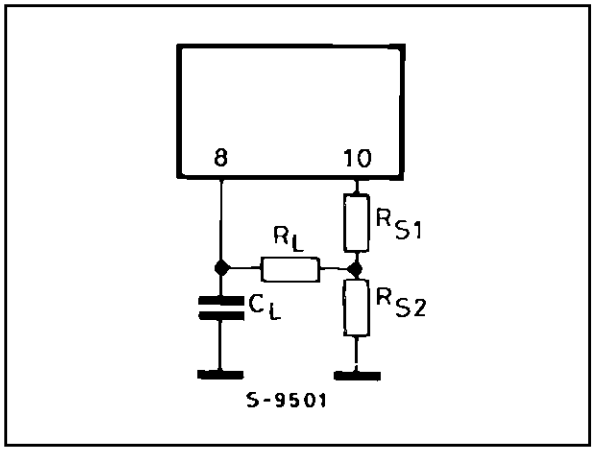

Figure 9.

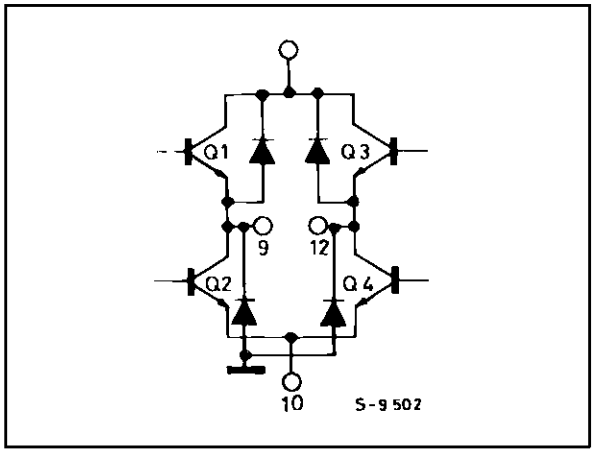

Pin 9

Output motor left. The four power transistors are realized as darlington structures. The arrangement is controlled by the logic status at pins 18 and 19.

As before explained (see block description), in the normal left or right mode one of the lower darlington becomes saturated whereas the other remains open. The upper half of the bridge operates in the linear mode.

In stop condition both upper bridge darlingtons are off and both lower are on. In the high output impedance state the bridge is switched completely off.

Connecting the motor between pins 9 and 12 both left or right rotation can be obtained. If only one rotation sense is used the motor can be connected at only one output, by using only the upper bridge half. Two motors can be connected each at the each output : in such case they will work alternatively (see application section).

The internal diodes, together with the collector substrate diodes, protect the output from inductive vol-tage spikes during the transition phase (fig. 10)

Figure 10.

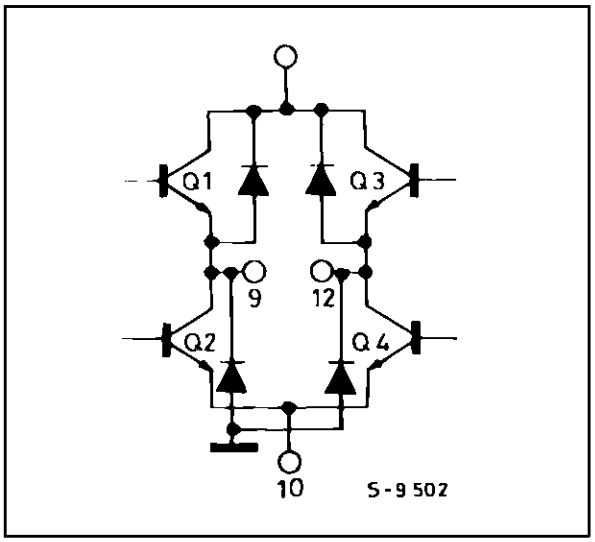

Pin 10

Common sense output. From this pin the output current of the bridge configuration (motor current) is fed into R_S external resistor in order to generate a proper voltage drop.

The drop is supplied into pin 1 for tachometric control and into pin 8 for V/I control (see pin 1 and pin 8 sections).

Pin 11

Supply voltage.

Pin 12

Output motor right. (see pin 9 section)

Pin 13

Output main amplifier. The voltage on this pin results from the tachometric speed control and feeds the output stage.

The value of the capacitor C_F (fig. 11), connected from pins 13 and 14, must be chosen low enough in order to obtain a short reaction time of the tachometric loop, and high enough in order to reduce the output ripple.

A compromise is reached when the ripple voltage (peak-to-peak) V_{ROP} is equal to 0.1 V_{MOTOR} :

$$C_F = 2.3 \frac{C_T}{V_{RIP}} \left(1 - \frac{R_T}{R_P}\right)$$

with $V_{RIP} = \frac{V_{FEM} + I_{MOT} \cdot R_{MOT}}{10}$ and with duty cycle = 50 %. (see pin 2-3 section)

Figure 11.

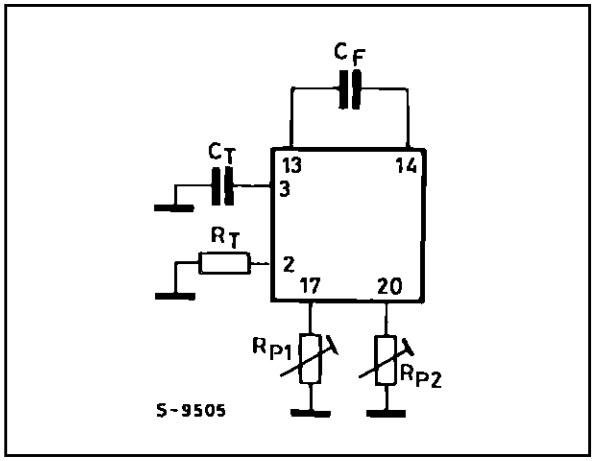

Figure 12.

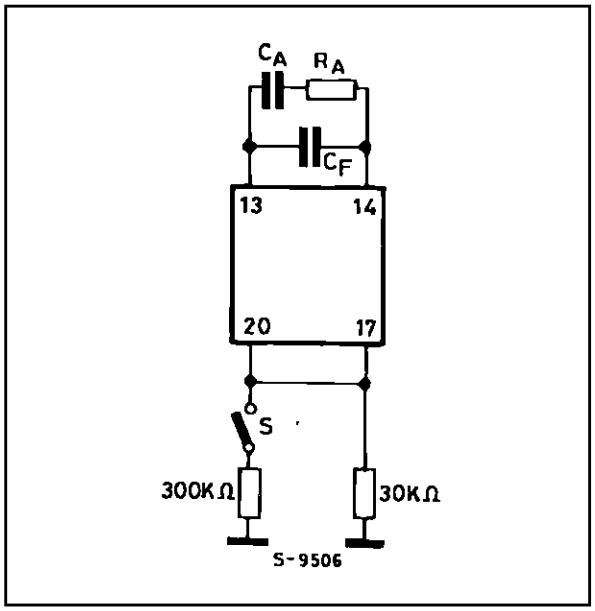

In order to compensate the behaviour of the whole system regulator-motor-load (considering axis friction, load torque, inertias moment of the motor of the load. etc.) a RC series network is also connected between pins 13 and 14 (fig. 12). The value of C_A and R_A must been chosen experimentally as follows:

- Increase of 10 % the speed with respect to the nominal value by connecting in parallel to R_p a resistor with value about 10 time larger.
- Vary the R_A and C_A values in order to obtain at pin 13 a voltage signal with short response time and without oscillations. Fig. 13 shows the step response at pin 13 versus R_A and C_A values.

Figure 13.

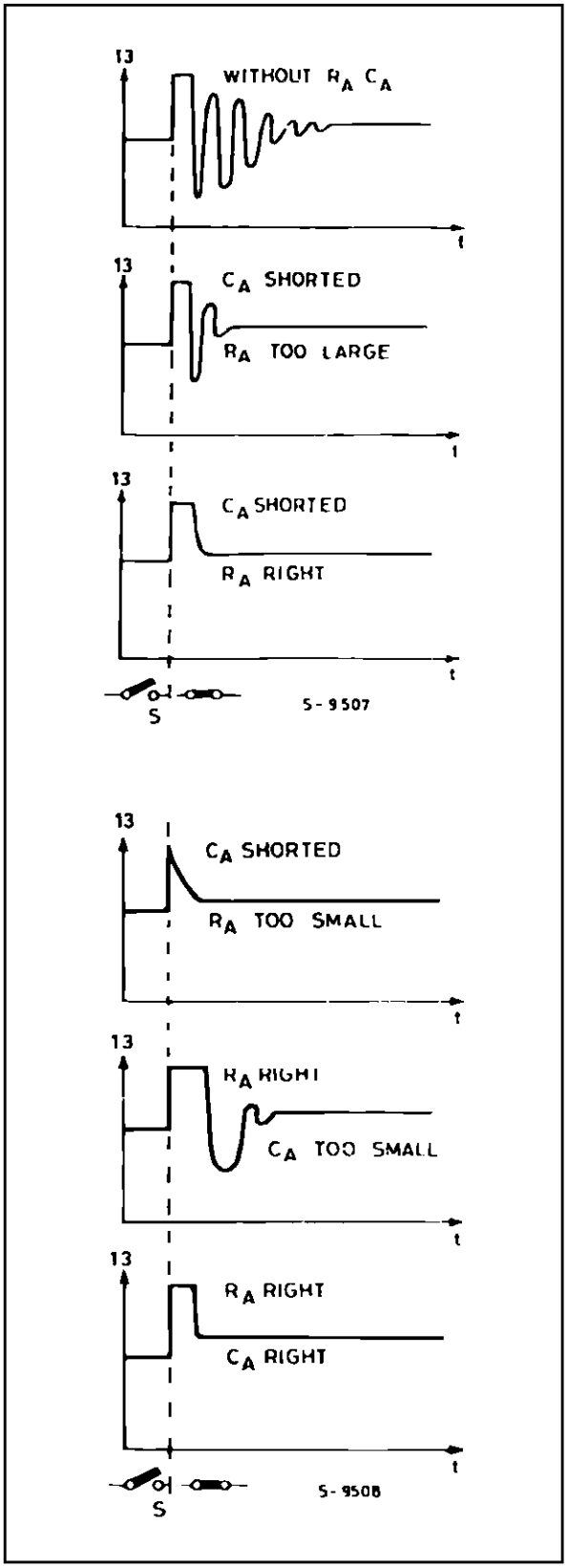

Pin 14

Figure 14.

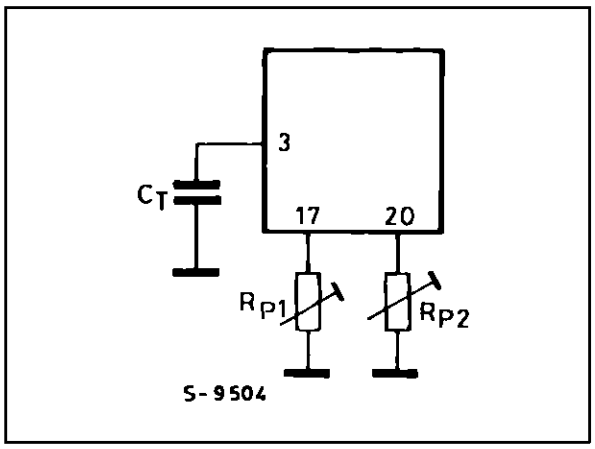

Inverting input of main amplifier. In this pin the current reference programmed at pins 20, 17 is compared with the current from the monostable (stream of rectangular pulses).

In steady-state condition (constant motor speed) the values are equal and the capacitor C_F voltage is constant.

This means for the speed n (min 1):

$$n = \frac{10.435}{C_T\, k\, R_P}$$

where "k" is the number of collector segments. (poles)

The non inverting input of the main amplifier is internally connected to a reference voltage (2.3 V).

Pin 15

Ground.

Pin 16

Ground.

Pin 17

Left speed adjustment. The voltage at this pin is fixed to a reference value of 0.8 V. A resistor from this pin and ground (fig. 14) fixes the reference current which will be compared with the medium output current of the monostable in order to fix the speed of the motor at the programmed value. The correct value of R_p would be :

$$R_P = \frac{10.435}{C_T\, k\, n}$$

n = motor speed, (min -1)
k = poles number

The control of speed can be done in different way:

- speed separately programmed in two senses of rotation (fig. 14-15) ;
- only one speed for the two senses of rotation (fig. 16) ;

Figure 15.

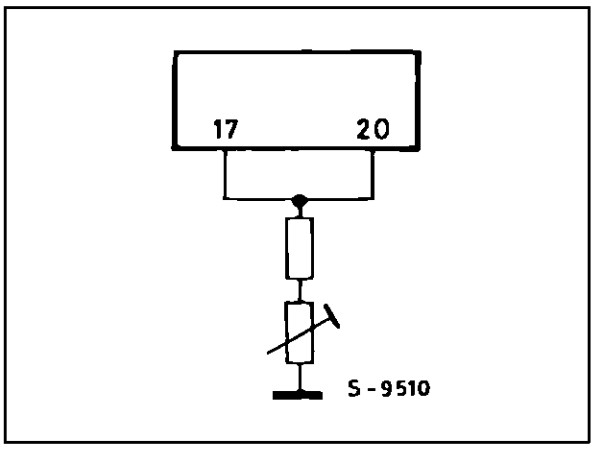

Figure 16.

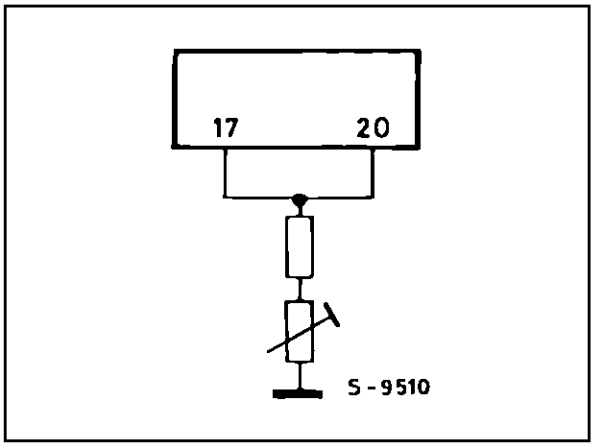

Figure 17.

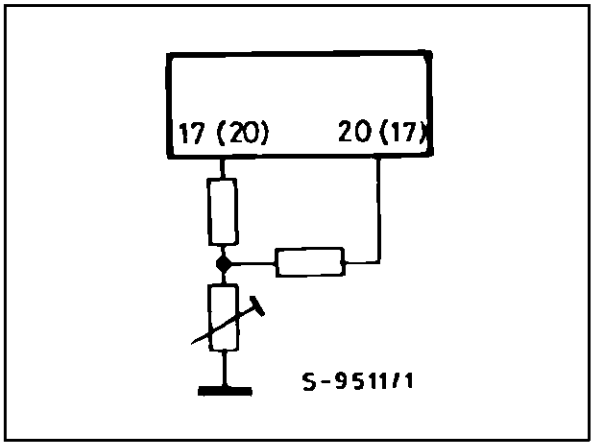

- speeds of the two senses a bit different (i.e. for compensating different pulley effects) (fig. 17) ;
- speed programmed with a DC voltage (fig. 18) i.e. with DA converter ;

- fast forward, by putting a resistor. In this case it is necessary that also at the higher speed for the duty cycle to be significately less than 1 (see value of R_T, C_T on pin 2, pin 3 sections).

Fig. 19 shows the function controlled with a µP.

Figure 18.

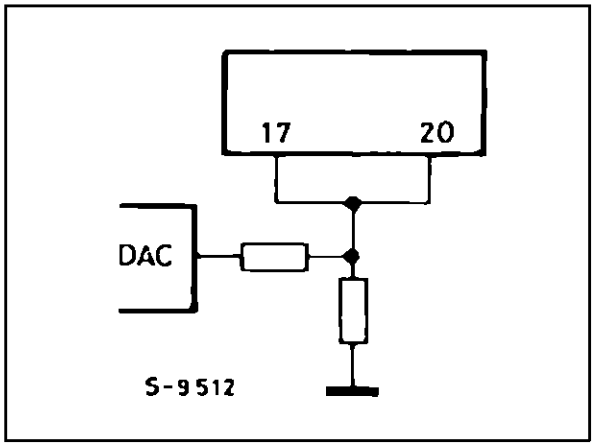

Pin 18

Right function control. The voltages applied to this pin and to pin 19 determine the function, as showed in the table.

Figure 19.

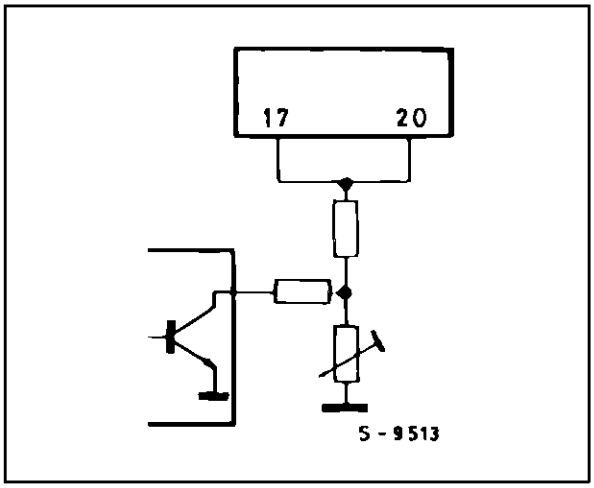

The typical value of the threshold (L-H) is 1.2 V.

Pin 19

Left function control. (see pin 18 sect).

Pin 20

Right speed adjustment. (see pin 17 sect).

CONDITION		OUTPUT FUNCTION	OUTPUT VOLTAGE	
Pin 18	Pin 19		Pin 12	Pin 9
L	L	STOP	LOW	LOW
H	L	LEFT	LOW	REG
L	H	RIGHT	REG	LOW
H	H	OPEN	HIGH IMP.	HIGH IMP.

Figure 20: Typical application.

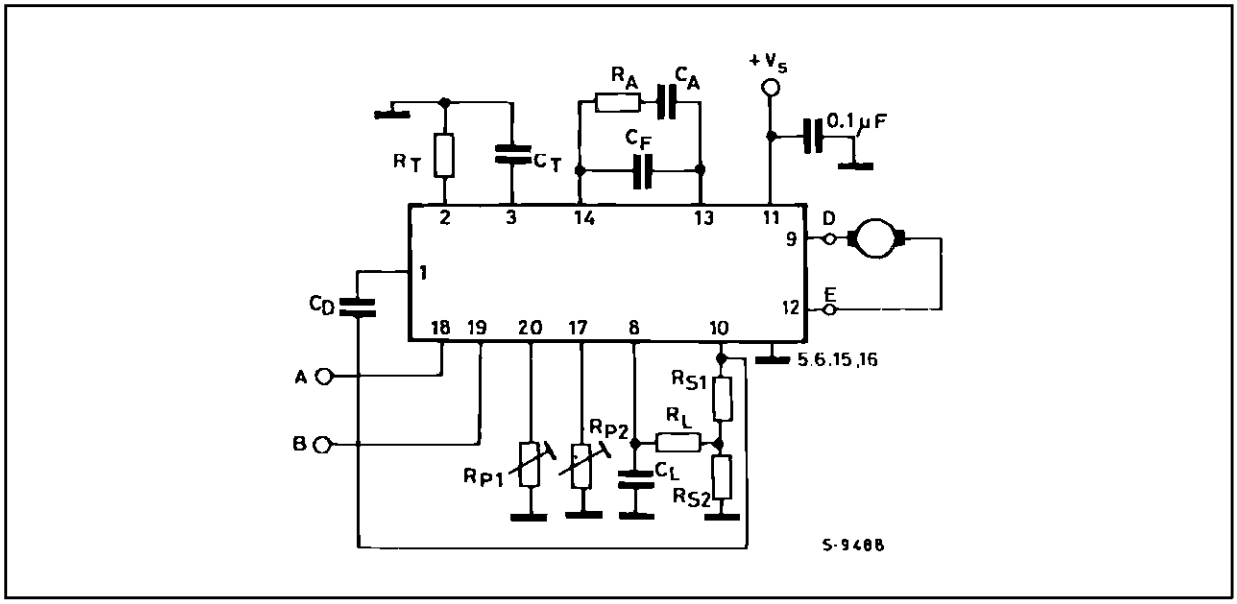

Figure 21: Tacho only speed regulation.

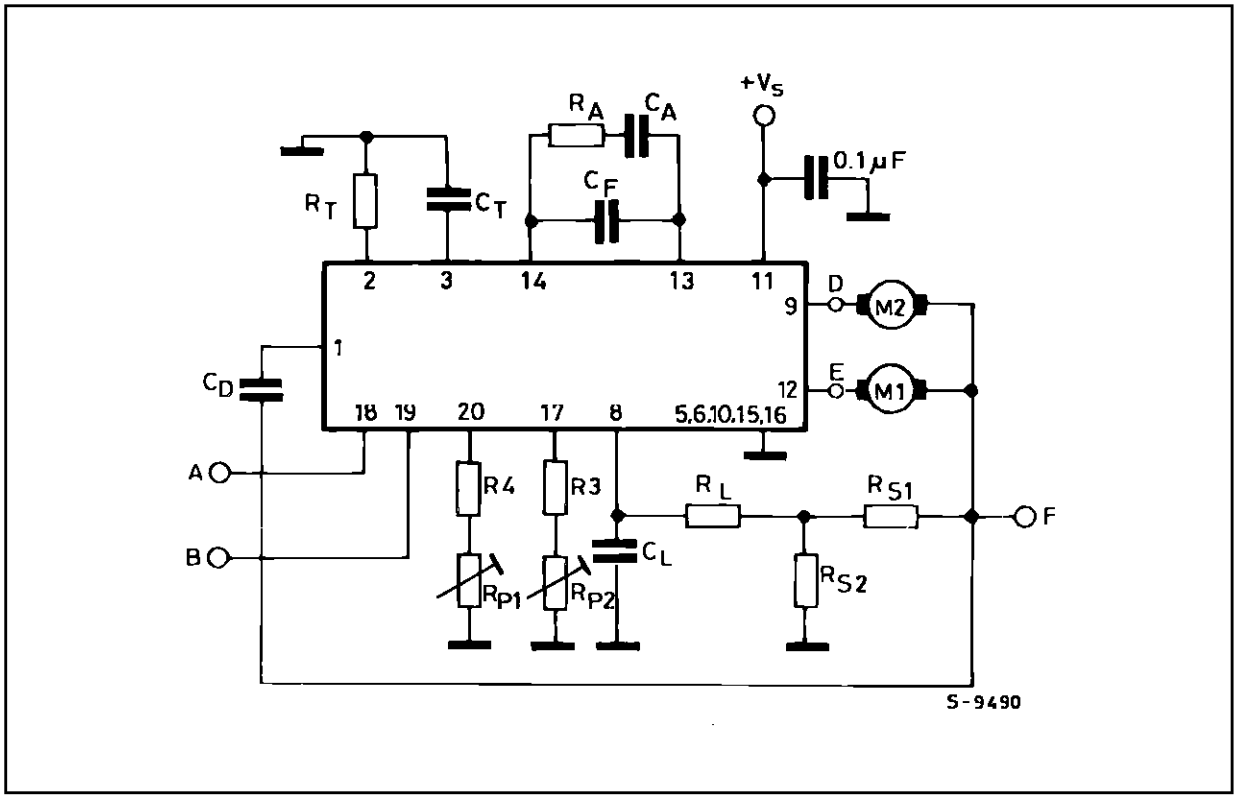

Figure 22: One direction regulator of one motor , or alternatively of two motors.

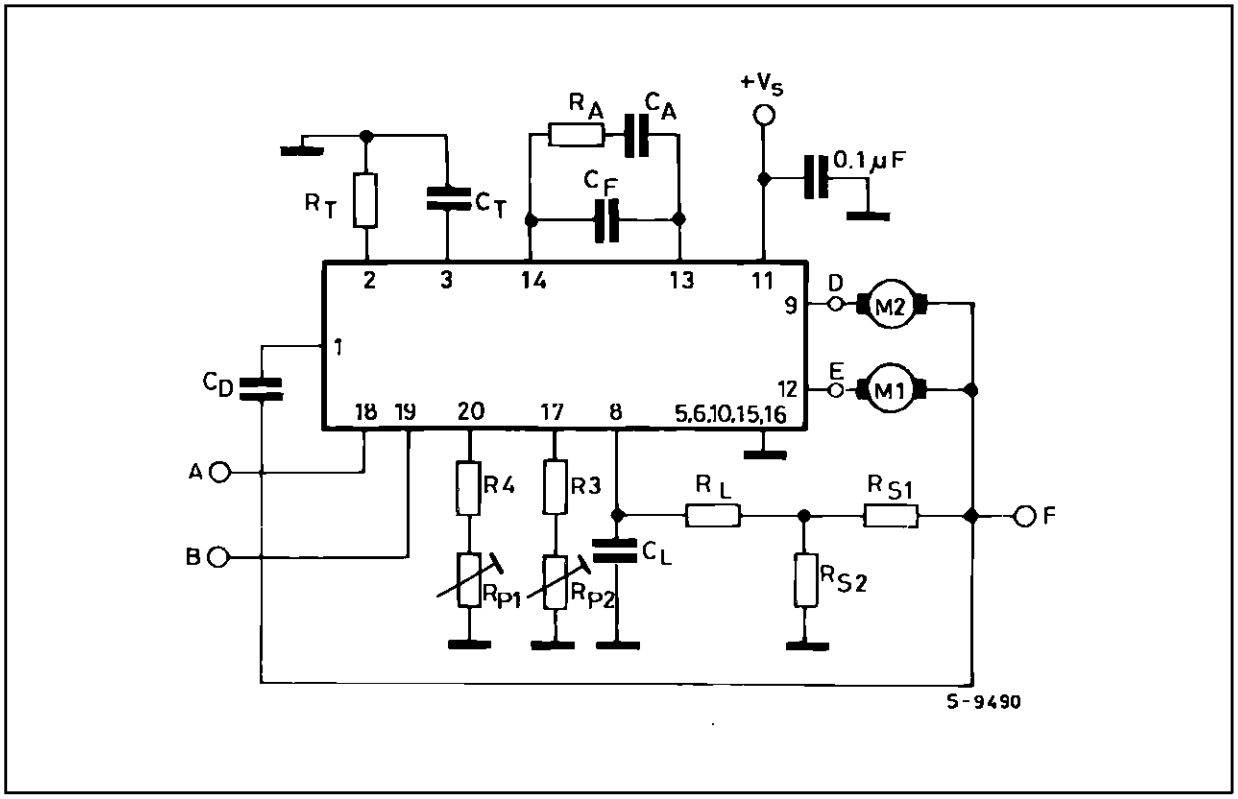

Figure 23: P.C. board and components layout of the circuits of Figg. 20, 21, 22.

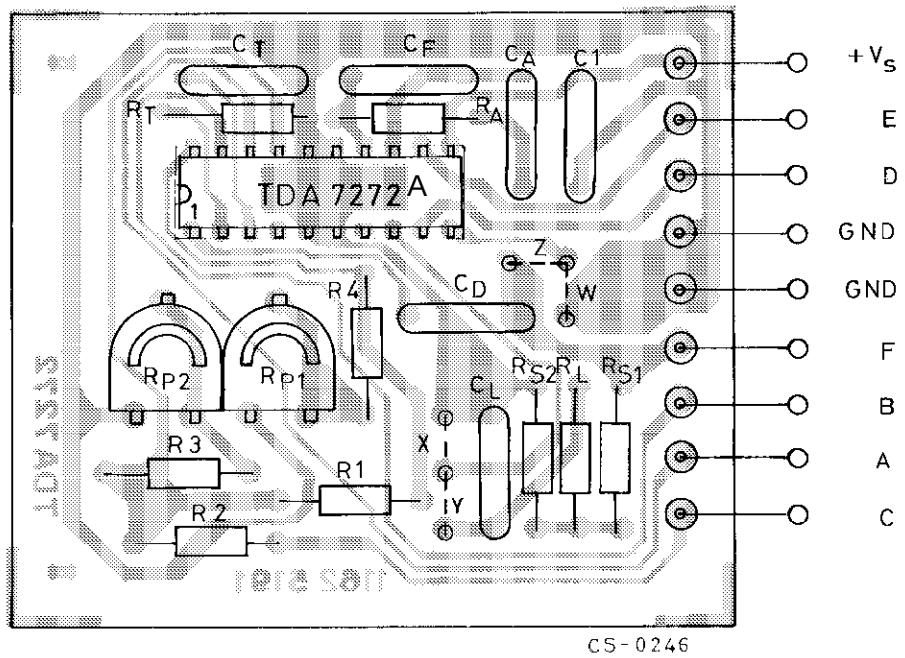

APPLICATION SUGGESTION (Fig. 20,21,22) - (For a 2000 r.p.m. 3 pole DC motor with $R_M = 16\Omega$)

Components	Recommended value	Purpose	If larger	If smaller	Allowed range	
					Min.	Max.
R_{S1}	1Ω	Current sensing tacho loop.		Tacho loop do not regulate	0	
R_{S2}	1.5Ω	Current sensing V/I loop.	Instability may occur.	Motor regulator; undercompens.	0	$R_{MOT}/9$
R_L; C_L	22KΩ - 68nF	Spike filtering.	Slow V/I regulator response.	High output ripple.		
C_D	68nF	Pulse transf.			33nF	100nF
R_T; C_T	15KΩ - 47nF	Current source programming to obtain a 50% duty cycle			67KΩ	30KW
R_{P1}; R_{P2}	47KΩ trim.	Set of speed.	Low speed.	High speed	0	
C_F	Polyester 100nF	Optimization of integrator ripple and loop response time.	Lower ripple, slower tacho regulator response.	Higher ripple, faster response.	10nF	470nF
R_A; C_A	220KΩ - 220nF	Fast response with no overshoot.	Depending on electrmechanical system.		10nF	470nF

Figure 24: Speed regulation vs. supply voltage (circuit of fig. 20).

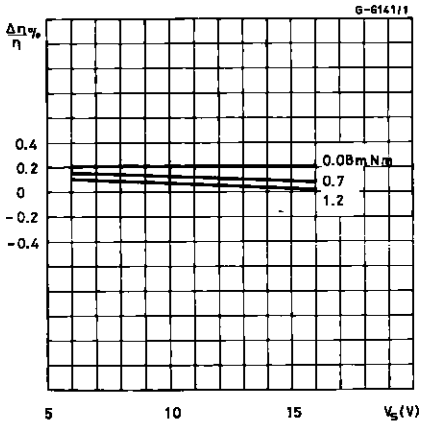

Figure 26: In connection with a Presettable Counter and I/O peripheral the TDA7271A/TDA7272A controls the speed through a D/A Converter.

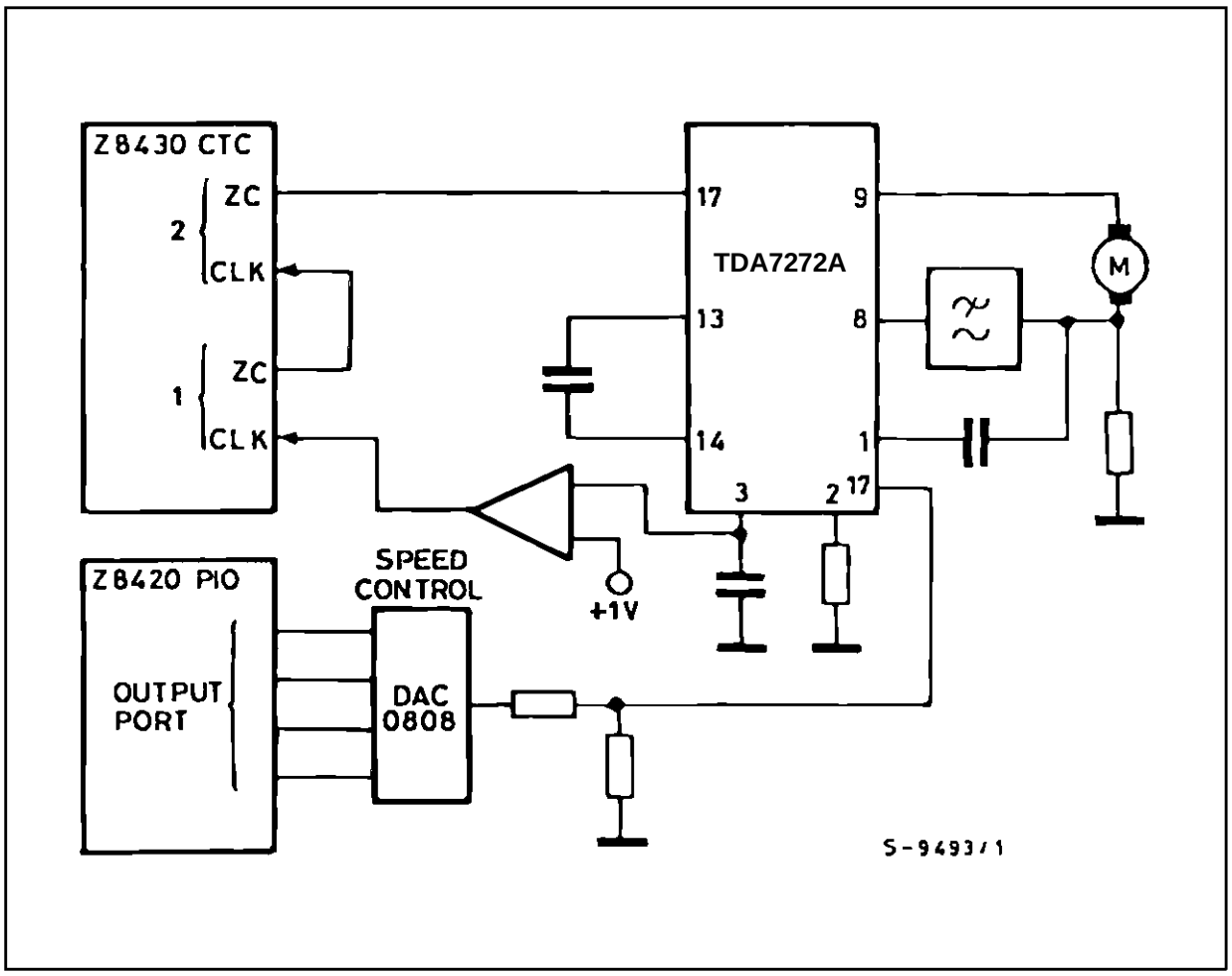

POWERDIP 20 PACKAGE MECHANICAL DATA

DIM.	mm			inch		
	MIN.	TYP.	MAX.	MIN.	TYP.	MAX.
a1	0.51			0.020		
B	0.85		1.40	0.033		0.055
b		0.50			0.020	
b1	0.38		0.50	0.015		0.020
D			24.80			0.976
E		8.80			0.346	
e		2.54			0.100	
e3		22.86			0.900	
F			7.10			0.280
I			5.10			0.201
L		3.30			0.130	
Z			1.27			0.050

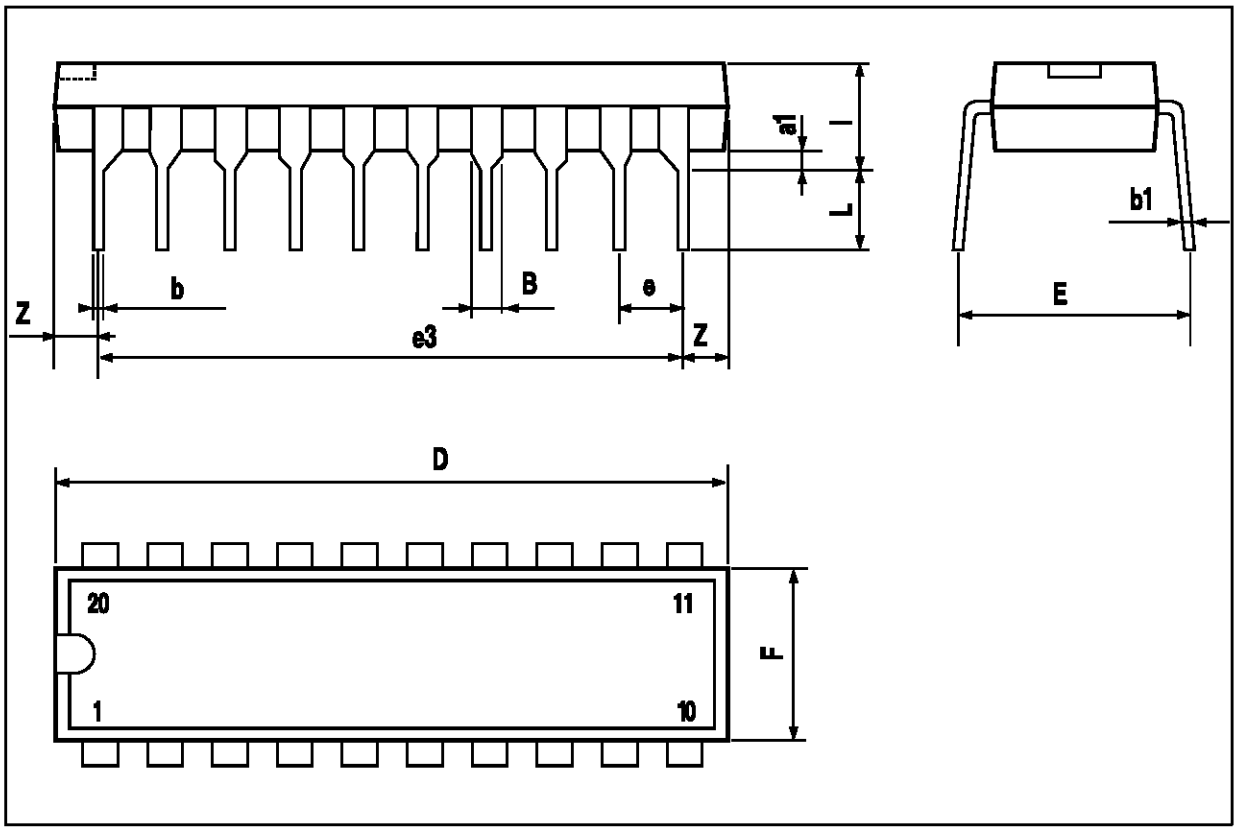

Information furnished is believed to be accurate and reliable. However, SGS-THOMSON Microelectronics assumes no responsibility for the consequences of use of such information nor for any infringement of patents or other rights of third parties which may result from its use. No license is granted by implication or otherwise under any patent or patent rights of SGS-THOMSON Microelectronics. Specifications mentioned in this publication are subject to change without notice. This publication supersedes and replaces all information previously supplied. SGS-THOMSON Microelectronics products are not authorized for use as critical components in life support devices or systems without express written approval of SGS-THOMSON Microelectronics.

© 1994 SGS-THOMSON Microelectronics - All Rights Reserved

SGS-THOMSON Microelectronics GROUP OF COMPANIES

Australia - Brazil - France - Germany - Hong Kong - Italy - Japan - Korea - Malaysia - Malta - Morocco - The Netherlands - Singapore - Spain - Sweden - Switzerland - Taiwan - Thaliand - United Kingdom - U.S.A.

SGS-THOMSON MICROELECTRONICS

TEA3718
TEA3718S

STEPPER MOTOR DRIVER

ADVANCE DATA

- HALF-STEP AND FULL-STEP MODE
- BIPOLAR DRIVE OF STEPPER MOTOR FOR MAXIMUM MOTOR PERFORMANCE
- BUILT-IN PROTECTION DIODES
- WIDE RANGE OF CURRENT CONTROL 5 TO 1500 mA
- WIDE VOLTAGE RANGE 10 TO 50 V
- DESIGNED FOR UNSTABILIZED MOTOR SUPPLY VOLTAGE
- CURRENT LEVELS CAN BE SELECTED IN STEPS OR VARIED CONTINUOUSLY
- THERMAL OVERLOAD PROTECTION
- ALARM OUTPUT OR PRE-ALARM OUTPUT (see internal table)

Powerdip 12 + 2 + 2

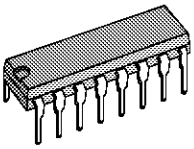

ORDERING NUMBERS :
TEA3718SDP
TEA3718DP

SO-20

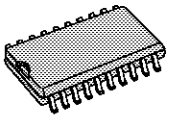

ORDERING NUMBER :
TEA3718SFP

MULTIWATT-15

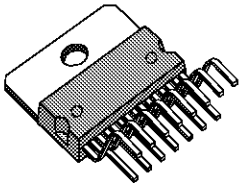

ORDERING NUMBER : TEA3718SP

DESCRIPTION

The TEA3718 and TEA3718S are bipolar monolithic integrated circuits intended to control and drive the current in one winding of a bipolar stepper motor. The circuits consist of an LS-TTL compatible logic input, a current sensor, a monostable and an output stage with built-in protection diodes. Two TEA3718 or TEA3718S and a few external components form a complete control and drive unit for LS-TTL or microprocessor-controlled stepper motor systems.

PIN CONNECTIONS (top views)

TEA3718SP (Multiwatt-15)

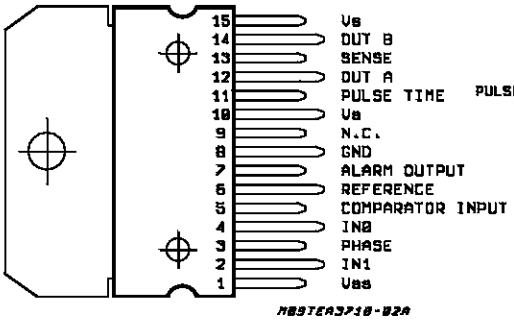

Note: HEATSINK SURFACE CONNECTED TO PIN 8

TEA3718SFP (SO-20)

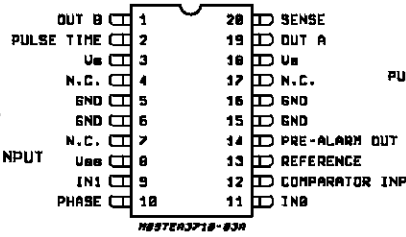

TEA3718DP TEA3718SDP (Powerdip 12+2+2)

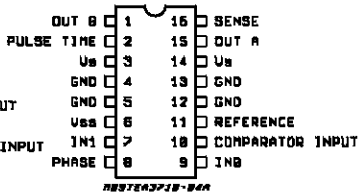

This is advanced information on a new product now in development or undergoing evaluation. Details are subject to change without notice.

BLOCK DIAGRAM TEA3718S

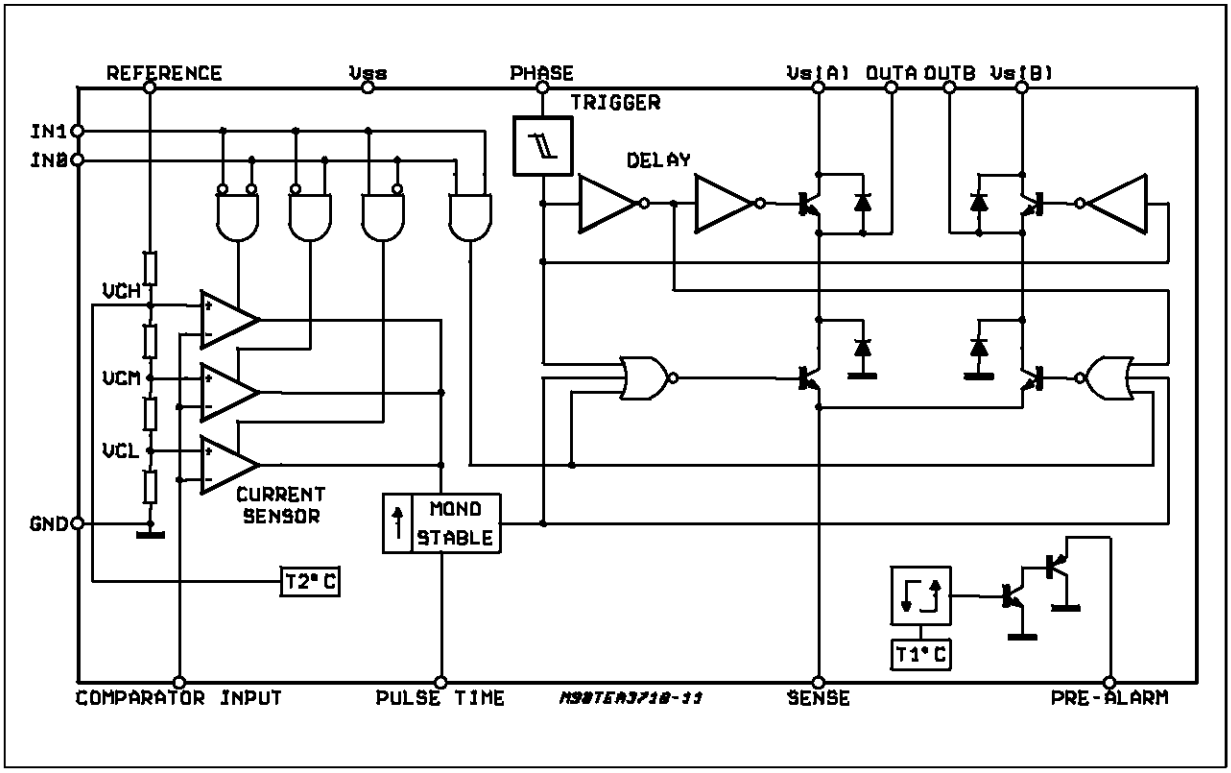

BLOCK DIAGRAM TEA3718

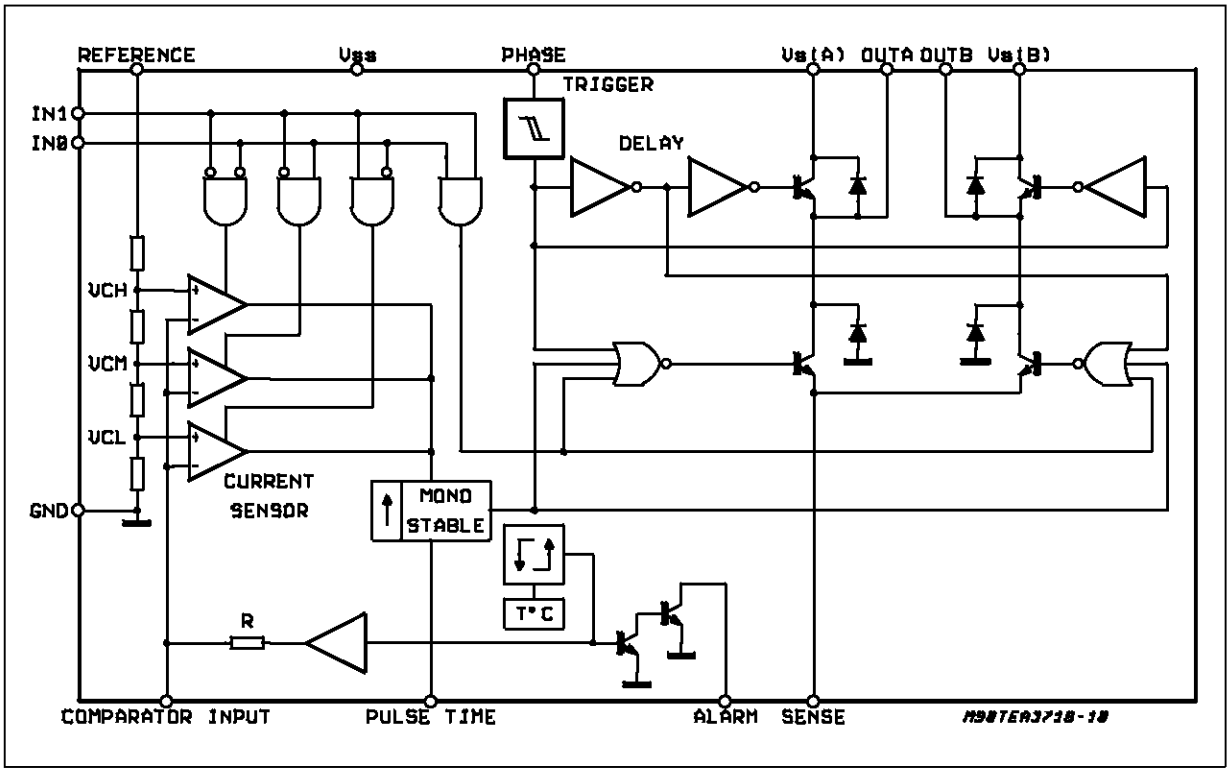

PIN FUNCTIONS

Name	Function
OUT B	Output Connection (with pin OUTA). The output stage is a "H" bridge formed by four transistors and four diodes suitable for switching applications.
PULSE TIME	A parallel RC network connected to this pin sets the OFF time of the lower power transistors. The pulse generator is a monostable triggered by the rising edge of the output of the comparators (t_{off} = 0.69 R_TC_T).
V_S(B)	Supply Voltage Input for Half Output Stage
GND	Ground Connection. In SO-20L and Powerdip these pins also conduct heat from die to printed circuit copper.
V_{SS}	Supply Voltage Input for Logic Circuitry
IN1	This pin and pin IN0 are logic inputs which select the outputs of three comparators to set the current level. Current also depends on the sensing resistor and reference voltage. See truth table.
PHASE	This TTL-compatible logic input sets the direction of current flow through the load. A high level causes current to flow from OUT A (source) to OUT B (sink). A Schmitt trigger on this input provides good noise immunity and a delay circuit prevents output stage short circuits during switching.
IN0	See INPUT 1
COMPARATOR INPUT	Input connected to the three comparators. The voltage across the sense resistor is feedback to this input through the low pass filter R_CC_C. The lower power transistor are disabled when the sense voltage exceeds the reference voltage of the selected comparator. When this occurs the current decays for a time set by R_TC_T, T_{off} = 0.69 R_TC_T.
REFERENCE	A voltage applied to this pin sets the reference voltage of the three comparators. Reference voltage with the value of R_S and the two inputs IN0 and IN1 determines the output current.
V_S(A)	Supply voltage input for half output stage
OUT A	See pin OUT B
SENSE RESISTOR	Connection to lower emitters of output stage for insertion of current sense resistor
ALARM	When T_j reaches T1°C the alarm output becomes low (TEA3718SP)
PRE-ALARM	When T_j reaches T2°C the prealarm output becomes low (T2<T1) (TEA3718SFP)

ABSOLUTE MAXIMUM RATINGS

Symbol	Parameters	Value	Unit
V_{SS} V_S	Supply Voltage	7 50	V V
V_I	Input Voltage: Logic Inputs Analog Inputs Reference Input	 6 V_{SS} 15	 V V V
i_i	Input Current Logic Inputs Analog Inputs	 -10 -10	 mA mA
I_O	Output Current	±1.5	A
T_J	Junction Temperature	+150	°C
T_{op}	Operating Ambient Temperature Range	0 to 70	°C
T_{stg}	Storage Temperature Range	-55 to +150	°C

THERMAL DATA

Symbol	Parameter	SO-20L	Powerdip	Multiwatt	Unit
R_{th}(j-c)	Maximum Junction-case Thermal Resistance	16	11	3	°C/W
R_{th}(j-a)	Maximum Junction-ambient Thermal Resistance	60 *	45 *	40	°C/W

* Soldered on a 35 µm thick 4 cm^2 PC board copper area.

RECOMMENDED OPERATING CONDITIONS

Symbol	Parameter	Min.	Typ.	Max.	Unit
v_{ss}	Supply Voltage	4.75	5	5.25	V
V_S	Supply Voltage	10	–	45	V
i_m	Output Current	0.020	–	1.2	A
T_{amb}	Ambient Temperature	0		70	°C
t_r	Rise Time Logic Inputs	–	–	2	µs
t_f	Fall Time Logic Inputs	–	–	2	µs

COMPARISON TABLE

Device	Current	Package	Alarm	Pre-Alarm
TEA3718SDP	1.5A	Powerdip 12+2+2		not connected
TEA3718SFP	1.5A	SO-20L		x
TEA3718SP	1.5A	Multiwatt-15	X	
TEA3718DP	1.5A	Powerdip 12+2+2	not connected	

MAXIMUM POWER DISSIPATION

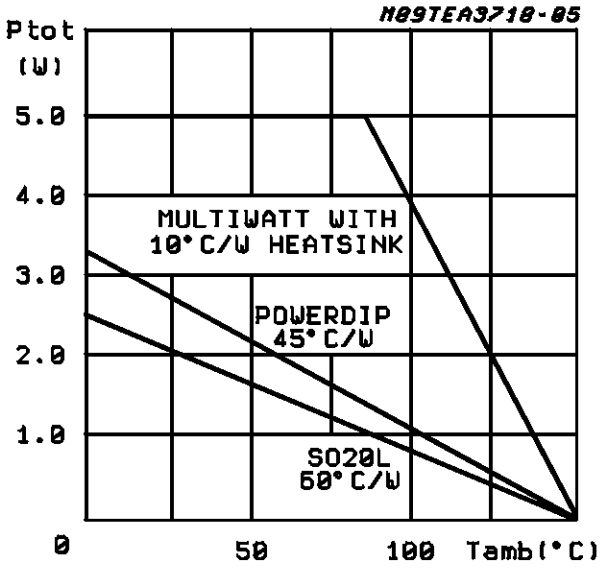

Figure 1.

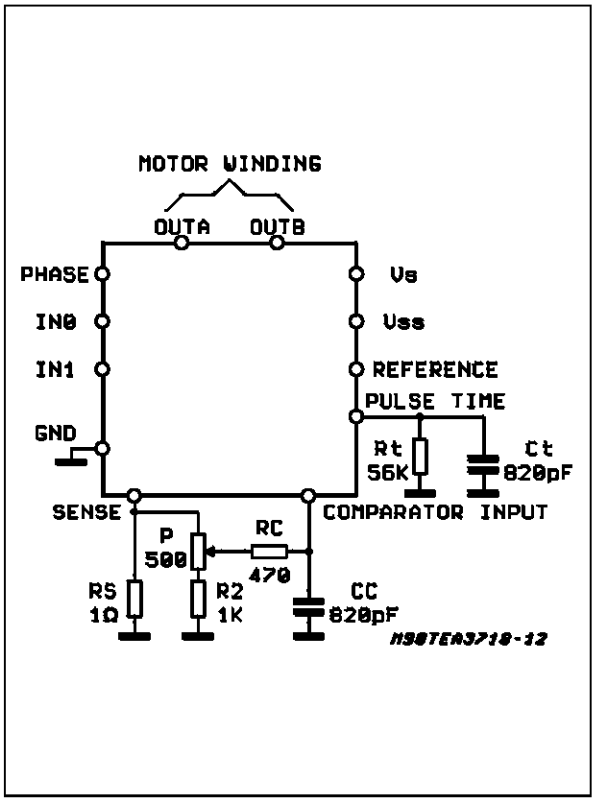

Figure 2.

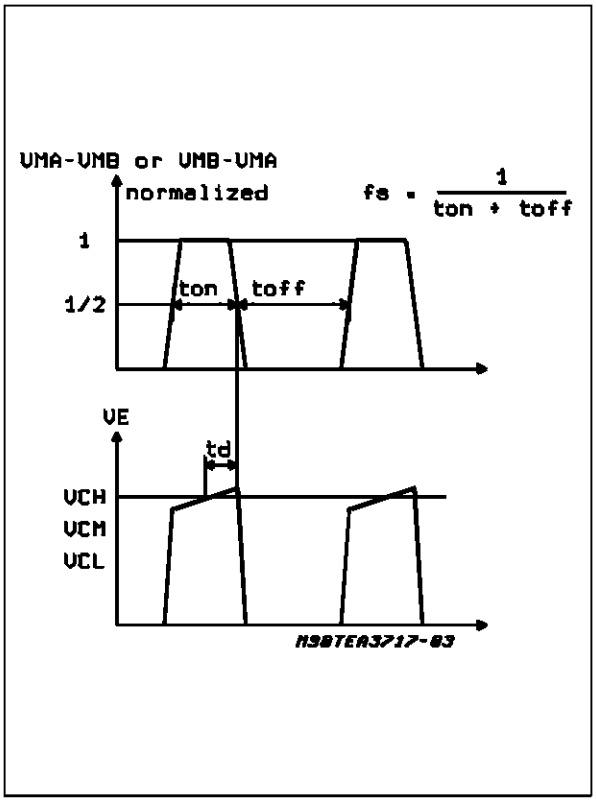

R_S = 1 Ω INDUCTANCE FREE
R_C = 470 Ω
C_C = 820 pF CERAMIC
R_t = 56 kΩ
C_t = 820 pF CERAMIC
P = 500 Ω
R_2 = 1 K

ELECTRICAL CHARACTERISTICS (V_{CC} = 5V, ± 5%, V_{mm} = 10V to 45V, T_{amb} = 0 to 70°C (T_{amb} = 25°C for TEA3718FP/SFP) unless otherwise specified)

Symbol	Parameter		Min.	Typ.	Max.	Unit
I_{CC}	Supply Current		-	-	25	mA
V_{IH}	High Level Input Voltage - Logic Inputs		2	-	-	V
V_{IL}	Low Level Input Voltage - Logic Inputs		-	-	0.8	V
I_{IH}	High Level Input Current - Logic Inputs		-	-	20	µA
I_{IL}	Low Level Input Current - Logic Inputs (VI = 0.4V)		-0.4	-	-	mA
V_{CH}	Comparator Thershold Voltage (VR = 5V)	I_O = 0 I_1 = 0	390	420	440	mV
V_{CM}		I_O = 0 I_1 = 0	230	250	270	mV
V_{CL}		I_O = 0 I_1 = 1	65	80	90	mV
I_{CO}	Comparator Input Current		-20	-	20	µA
I_{off}	Output Leakage Current (I_O = 0, I_1 = 1 T_{amb} = 25°C		-	-	100	µA
V_{sat}	Total Saturation Voltage Drop (Im = 1A)	SO20/Powerdip	-	-	2.8	V
		Multiwatt	-	-	3.2	V
P_{tot}	Total Power Disssipation - I_m = 1A, f_s = 30KHz		-	3.1	3.6	W
t_{off}	Cut off Time (see figure 1 and 2, V_{mm} = 10V, V_{ton} > 5µs		25	30	35	ms
t_d	Turn off Delay (see fig. 1 and 2, T_{amb} = 25°C, dVC/dt>50mV/µs)		-	1.6	-	µs
V_{sat}	Alarm Output Saturation Voltage - I_O = 2mA (Multiwatt)		-	0.8	-	V
I_{ref}	Reference Input Current, V_R = 5V		-	0.4	1	mA
V_{sat}	Source Diode Transistor Pair Saturation Voltage	Powerdip I_m = 0.5A	-	1.05	1.2 (1.3)	V
		Powerdip I_m = 1A	-	1.35	1.5 (1.7)	V
		Multiwatt I_m = 0.5A	-	-	1.3	V
		Multiwatt I_m = 1A	-	-	1.7	V
V_f	Diode Forward Voltage	I_f = 0.5A	-	1.1	1.5 (1.6)	V
		I_f = 1A	-	1.25	1.7 (1.9)	V
I_{sub}	Substrate Leakage Current	I_f = 1A	-	-	5	mA
V_{sat}	Sink Diode Transistor Pair Saturation Voltage	Powerdip I_m = 0.5A	-	1	1.2 (1.3)	V
		Powerdip I_m = 1A	-	1.2	1.3 (1.5)	V
		Multiwatt I_m = 0.5A	-	-	1.3	V
		Multiwatt I_m = 1A	-	-	1.5	V
V_f	Diode Forward Voltage	I_f = 0.5A	-	1	1.4 (1.6)	V
		I_f = 1A	-	1.1	1.5 (1.9)	V

Notes:

(…) Only for TEA3718SFP mounted in SO-20L package.

SINK DRIVER $V_{CE\ sat}$ VS I_{OUT} and T_j

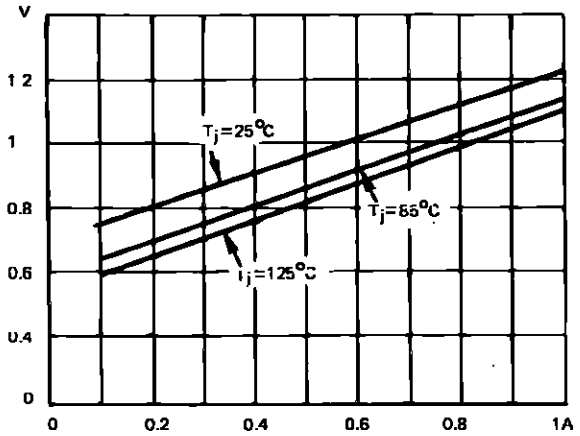

LOWER DIODE V_F VS I_{OUT} and T_J

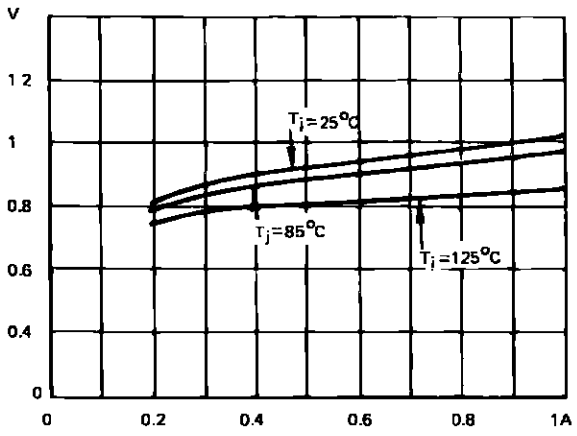

SOURCE DRIVER $V_{CE\ sat}$ VS I_{OUT} and T_j

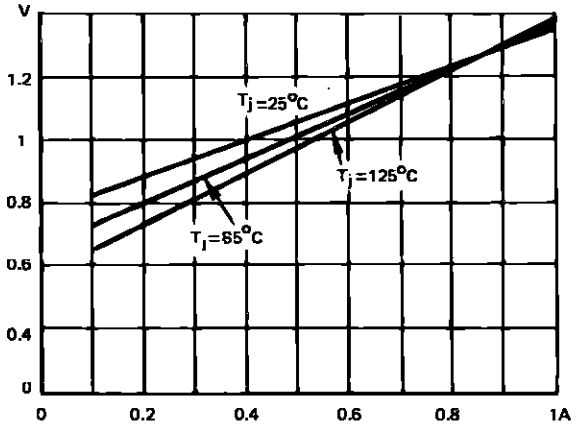

UPPER DIODE V_F VS I_{OUT} and T_j

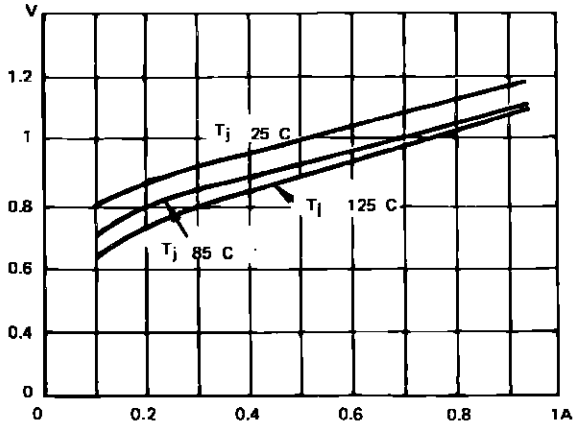

I_{ref} VS JUNCTION TEMPERATURE

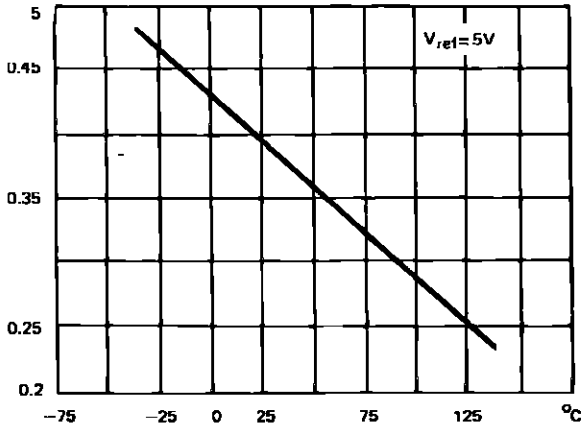

COMPARATOR INPUT CURRENT VS T_j and V_C

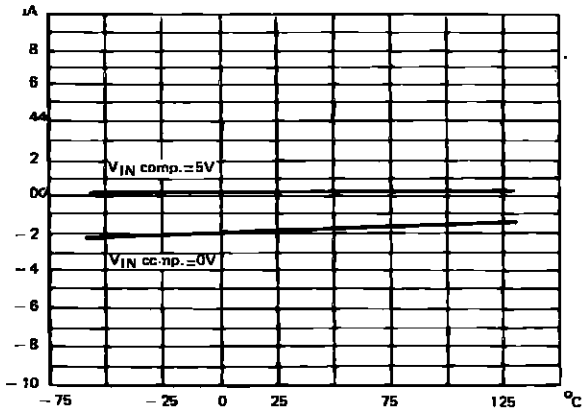

FUNCTIONAL BLOCKS

Figure A: ALARM OUTPUT (TEA3718SP - TEA3718DP)

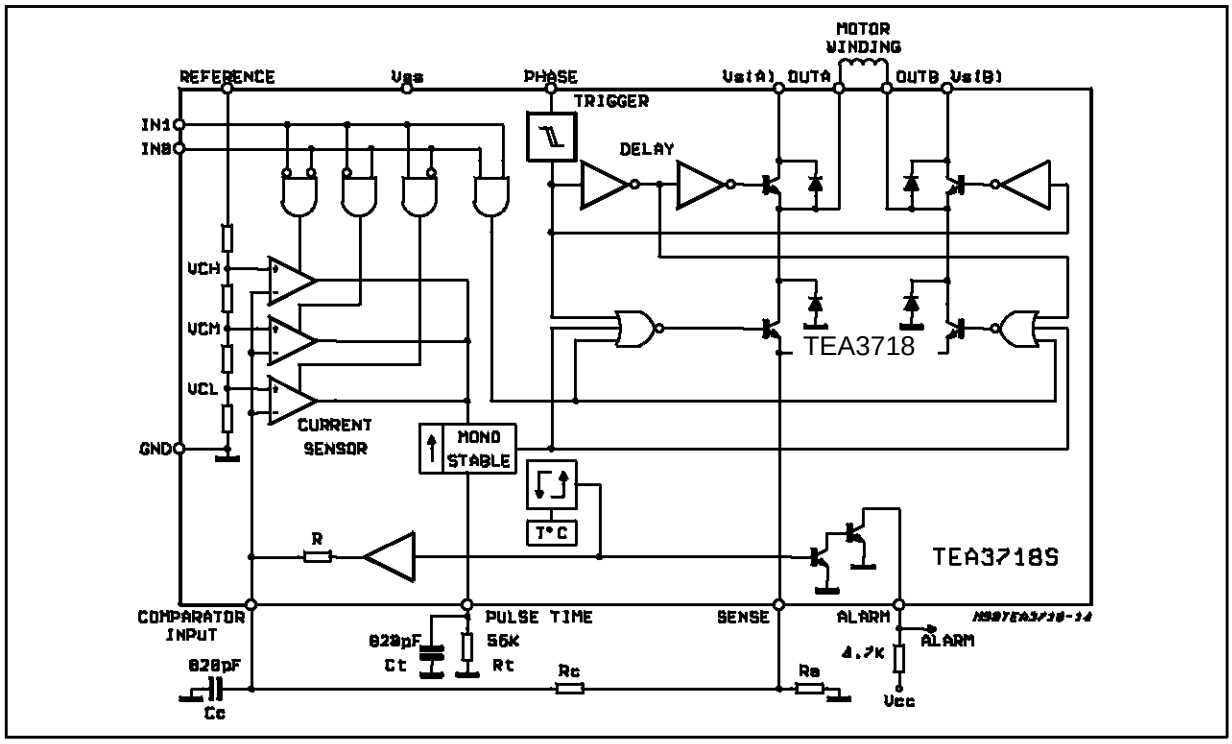

Figure B: PRE-ALARM OUTPUT (TEA3718SDP - TEA3718SFP)

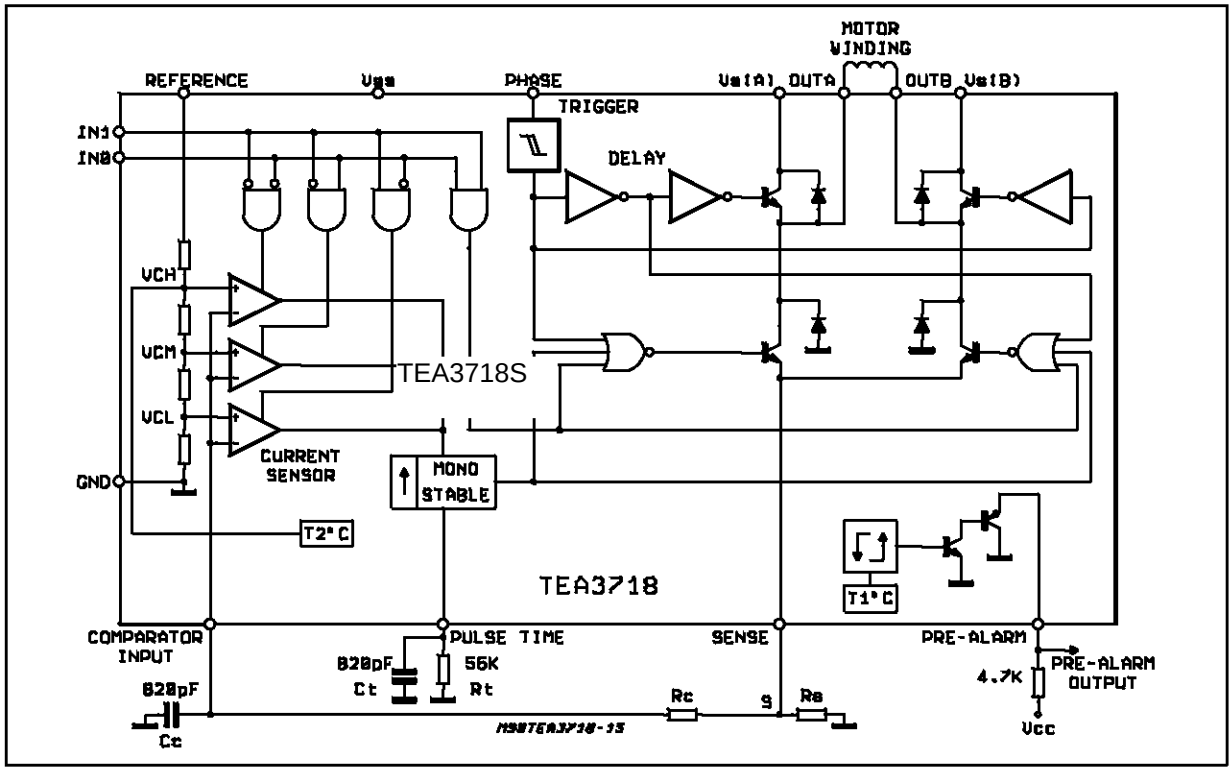

ALARM OUTPUTS (TEA3718SP - TEA3718DP)
The alarm output becomes low when the junction temperature reaches T°C.
When an alarm condition occours, parts of the supply voltage (dividing bridge R - R_C) is fed to the comparator input pin (Fig. A)
Depending of the R_CC value the behaviour of the circuit is different on alarm condition:

1) $R_C > 80\Omega \Rightarrow$ the output stage is switched off

2) $R_C > 60\Omega \Rightarrow$ the current in the motor windings is reduced according to the approximate formula: (see also fig. E and F)

$$I_m = \frac{V_{TH}}{R_S} - \frac{V_{CC}}{R + R_C} \bullet \frac{R_C}{R_S}$$

with V_{TH} = Threshold of the comparator (V_{CH}, V_{CM}, V_{CL}) R = 700Ω (typical)

For several Multiwatt packages a common detection can be obtained as in Fig. D

PRE-ALARM OUTPUT
When the junction temperature reaches T1°C (typ. = 170°C) a prealarm signal is generated.

Soft thermal protection occours when function temperature reaches T2 (T2 > T1)

Figure C: Alarm Detection for Powerdip Package

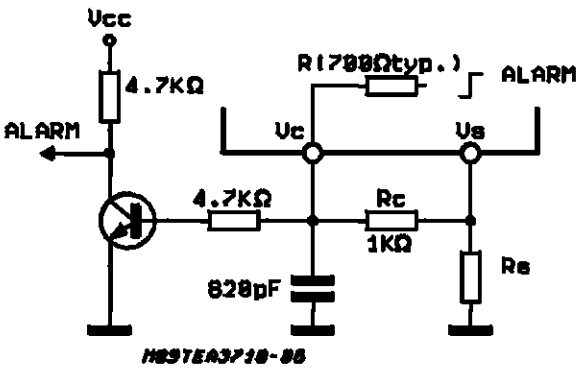

Figure D: CommonDetection for Several Multiwatt Package

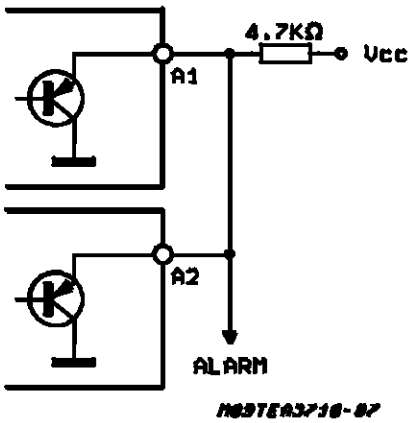

Figure E: (typical curve) Current Reduction in the Motor on Alarm Condition.

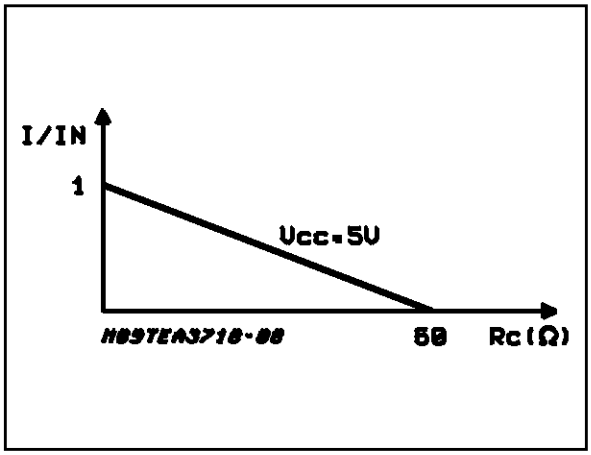

Figure F: (V_{ref} 5V) Block Diagram for Half Current on Alarm Condition.

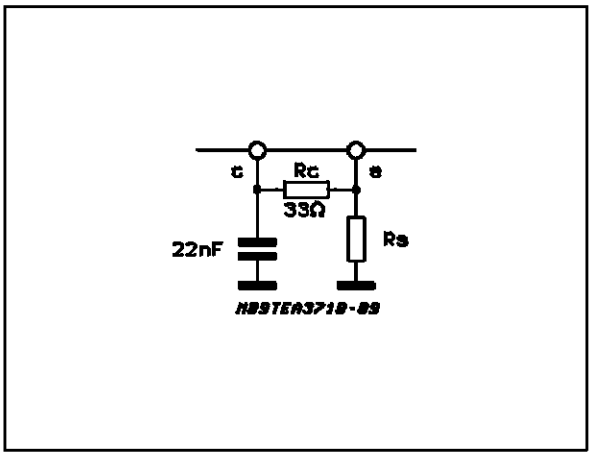

Notes: 1. Resistance values given here are for the V_{ch} threshold. They should be adjusted using other comparators threshold or other V_{ref} value.

TYPICAL APPLICATION

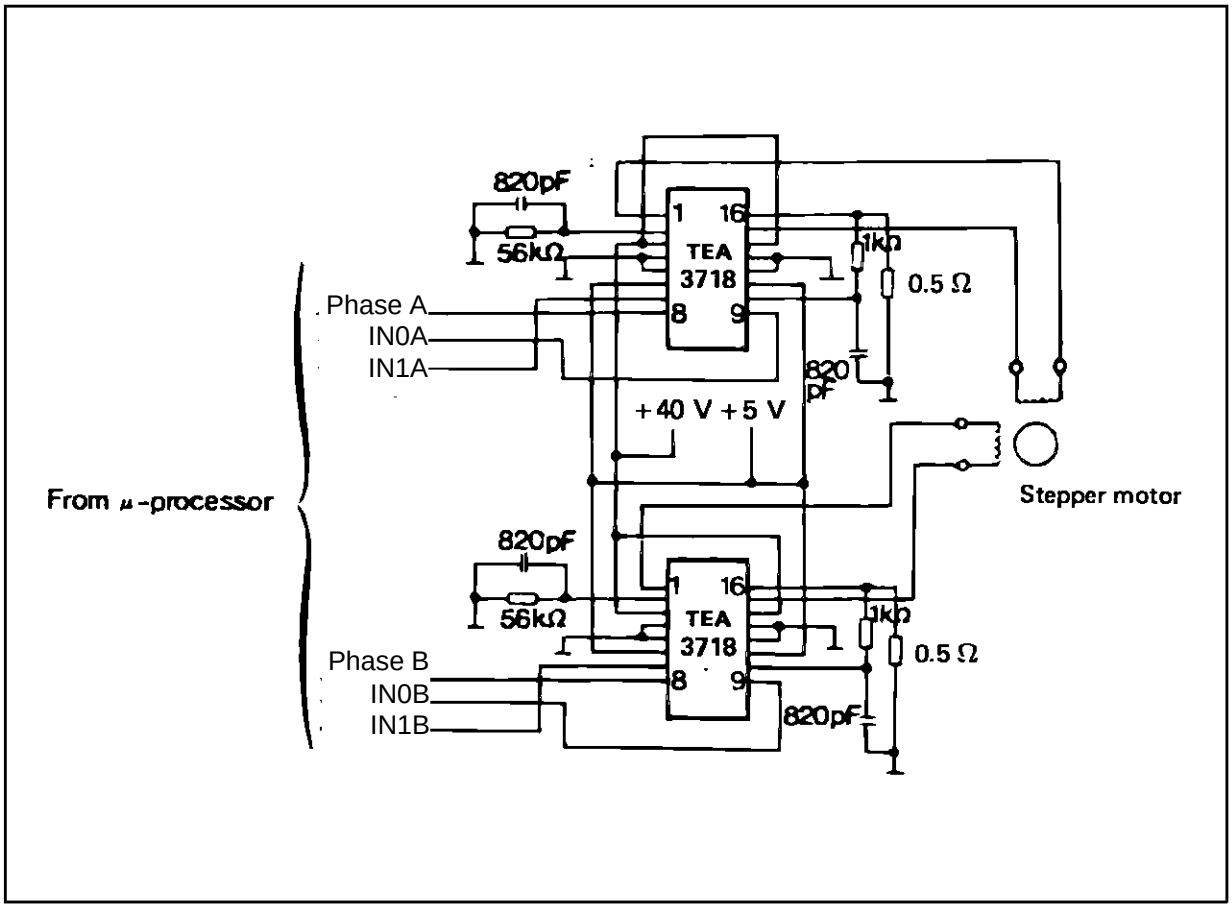

FUNCTIONAL DESCRIPTION

The circuit is intended to drive a bipolar constant current through one motor winding. The constant current is generated through switch mode regulation.

There is a choice of three different current levels with the two logic inputs IN0 and IN1. The current can also be switched off completely.

INPUT LOGIC

If any of the logic inputs is left open, the circuit will treat it as a high level input.

IN0	IN1	Current Level
H	H	No Current
L	H	Low Current
H	L	Medium Current
L	L	Maximum Current

PHASE - This input determines the direction of current flow in the winding, depending on the motor connections. The signal is fed through a Schmidt-trigger for noise immunity, and through a time delay in order to guarantee that no short-circuit occurs in the output stage during phase-shift. High level on the PHASE input causes the motor current flow from Out A through the winding to Out B.

I_{H0} and I_{H1} - The current level in the motor winding is selected with these inputs. The values of the different current levels are determined by the reference voltage V_R together with the value of the sensing resistor R_S.

CURRENT SENSOR

This part contains a current sensing resistor (R_S), a low pass filter (R_C, C_C) and three comparators. Only one comparator is active at a time. It is activated by the input logic according to the current level chosen with signals IN0 and IN1. The motor current flows through the sensing resistor R_S. When the current has increased so that the voltage across R_S becomes higher than the reference voltage on the other comparator input, the comparator output goes high, which triggers the pulse generator and its output goes high during a fixed pulse time (t_{off}), thus switching off the power feed to the motor winding, and causing the motor current to decrease during t_{off}.

SINGLE-PULSE GENERATOR

The pulse generator is a monostable triggered on the positive going edge of the comparator output. The monostable output is high during the pulse time, t_{off}, which is determined by the timing components R_t and C_t.

$$t_{off} = 0.69 \cdot R_t C_t$$

The single pulse switches off the power feed to the motor winding, causing the winding current to decrease during t_{off}.

If a new trigger signal should occur during t_{off}, it is ignored.

OUTPUT STAGE

The output stage contains four Darlington transistors and four diodes, connected in an H-bridge. The two sinking transistors are used to switch the power supplied to the motor winding, thus driving a constant current through the winding.

It should be noted however, that it is not permitted to short circuit the outputs.

V_{SS}, V_S, V_R

The circuit will stand any order of turn-on or turn-off the supply voltages V_{SS} and V_S. Normal dV/dt values are then assumed.

Preferably, V_R should be tracking V_{SS} during power-on and power-off if V_S is established.

ANALOG CONTROL

The current levels can be varied continuously if V_R is varied with a circuit varying the voltage on the comparator terminal.

POWER LOSSES V_S OUTPUT CURRENT

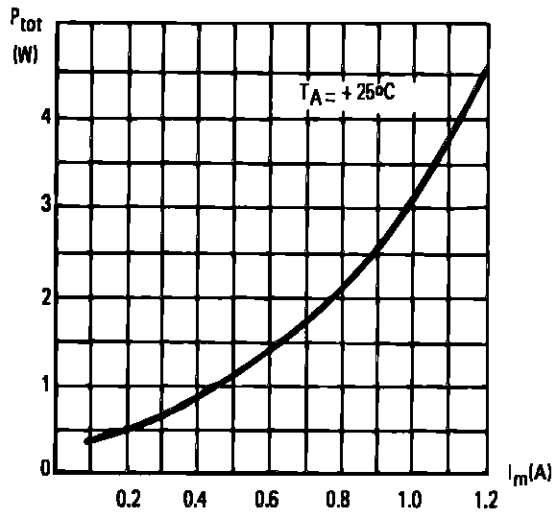

PRINCIPAL OPERATING SEQUENCE

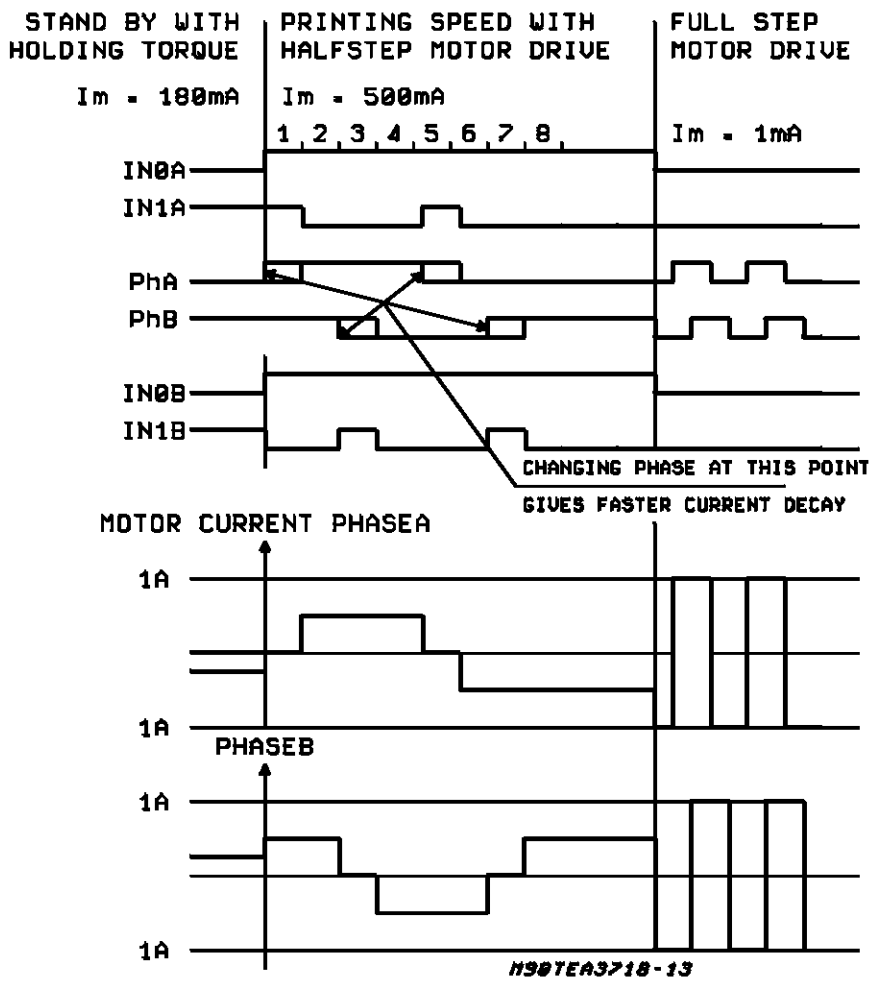

APPLICATION NOTES

MOTOR SELECTION

Some stepper motors are not designed for continuous operation at maximum current. As the circuit drives a constant current through the motor, its temperature might increase exceedingly both at low and high speed operation.

Also, some stepper motors have such high core losses that they are not suited for switch mode current regulation.

UNUSED INPUTS

Unused inputs should be connected to proper voltage levels in order to get the highest noise immunity.

INTERFERENCE

As the circuit operates with switch mode current regulation, interference generation problems might arise in some applications. A good measure might then be to decouple the circuit with a 15 nF ceramic capacitor, located near the package between power line V_S and ground.

The ground lead between R_S, C_C and circuit GND should be kept as short as possible. This applies also to the lead between the sensing resistor R_S and point S, see FUNCTIONAL BLOCKS.

MULTIWATT15 PACKAGE MECHANICAL DATA

DIM.	mm			inch		
	MIN.	TYP.	MAX.	MIN.	TYP.	MAX.
A			5			0.197
B			2.65			0.104
C			1.6			0.063
D		1			0.039	
E	0.49		0.55	0.019		0.022
F	0.66		0.75	0.026		0.030
G	1.02	1.27	1.52	0.040	0.050	0.060
G1	17.53	17.78	18.03	0.690	0.700	0.710
H1	19.6			0.772		
H2			20.2			0.795
L	21.9	22.2	22.5	0.862	0.874	0.886
L1	21.7	22.1	22.5	0.854	0.870	0.886
L2	17.65		18.1	0.695		0.713
L3	17.25	17.5	17.75	0.679	0.689	0.699
L4	10.3	10.7	10.9	0.406	0.421	0.429
L7	2.65		2.9	0.104		0.114
M	4.25	4.55	4.85	0.167	0.179	0.191
M1	4.63	5.08	5.53	0.182	0.200	0.218
S	1.9		2.6	0.075		0.102
S1	1.9		2.6	0.075		0.102
Dia1	3.65		3.85	0.144		0.152

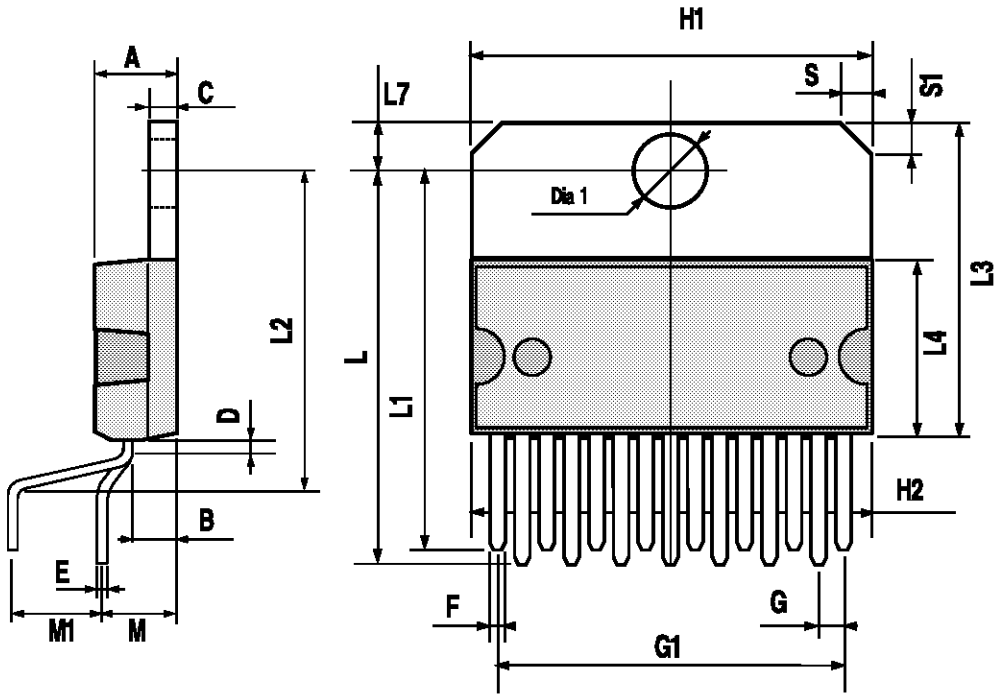

POWERDIP 16 PACKAGE MECHANICAL DATA

DIM.	mm			inch		
	MIN.	TYP.	MAX.	MIN.	TYP.	MAX.
a1	0.51			0.020		
B	0.85		1.40	0.033		0.055
b		0.50			0.020	
b1	0.38		0.50	0.015		0.020
D			20.0			0.787
E		8.80			0.346	
e		2.54			0.100	
e3		17.78			0.700	
F			7.10			0.280
I			5.10			0.201
L		3.30			0.130	
Z			1.27			0.050

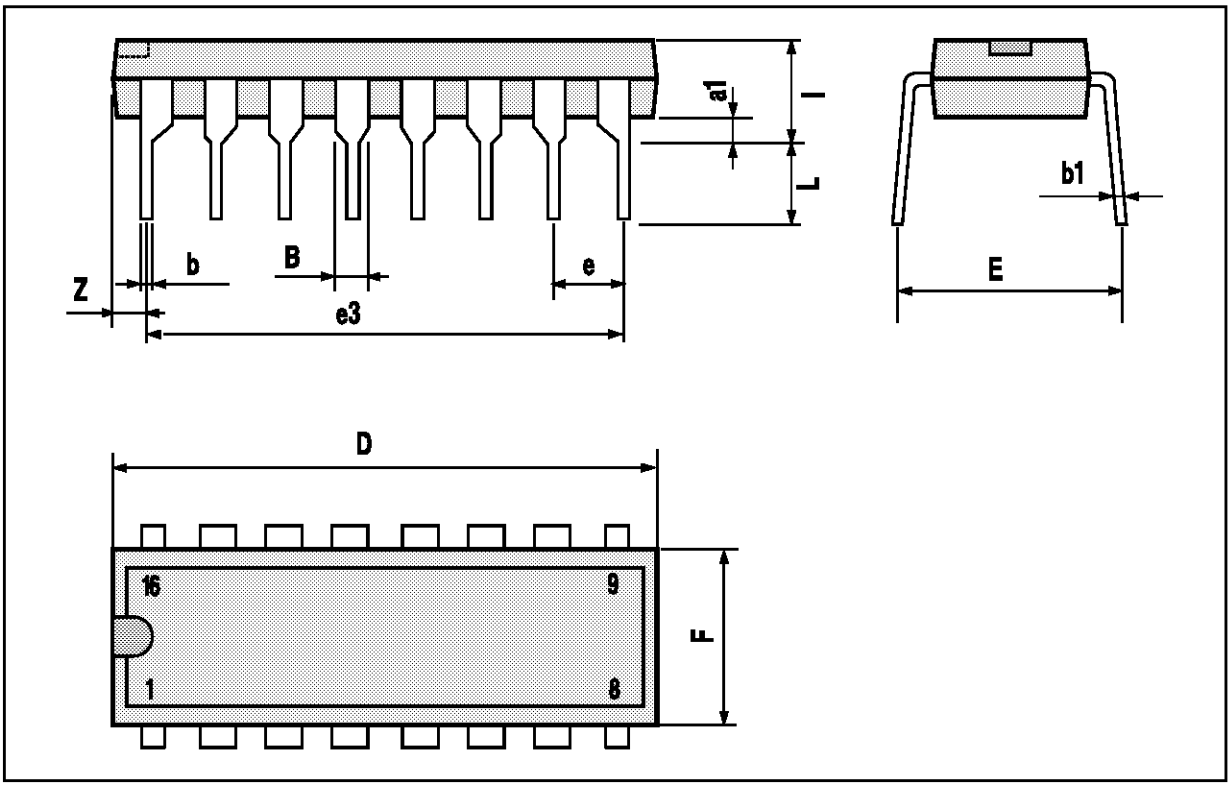

SO20 PACKAGE MECHANICAL DATA

DIM.	mm			inch		
	MIN.	TYP.	MAX.	MIN.	TYP.	MAX.
A			2.65			0.104
a1	0.1		0.3	0.004		0.012
a2			2.45			0.096
b	0.35		0.49	0.014		0.019
b1	0.23		0.32	0.009		0.013
C		0.5			0.020	
c1	45 (typ.)					
D	12.6		13.0	0.496		0.512
E	10		10.65	0.394		0.419
e		1.27			0.050	
e3		11.43			0.450	
F	7.4		7.6	0.291		0.299
L	0.5		1.27	0.020		0.050
M			0.75			0.030
S	8 (max.)					

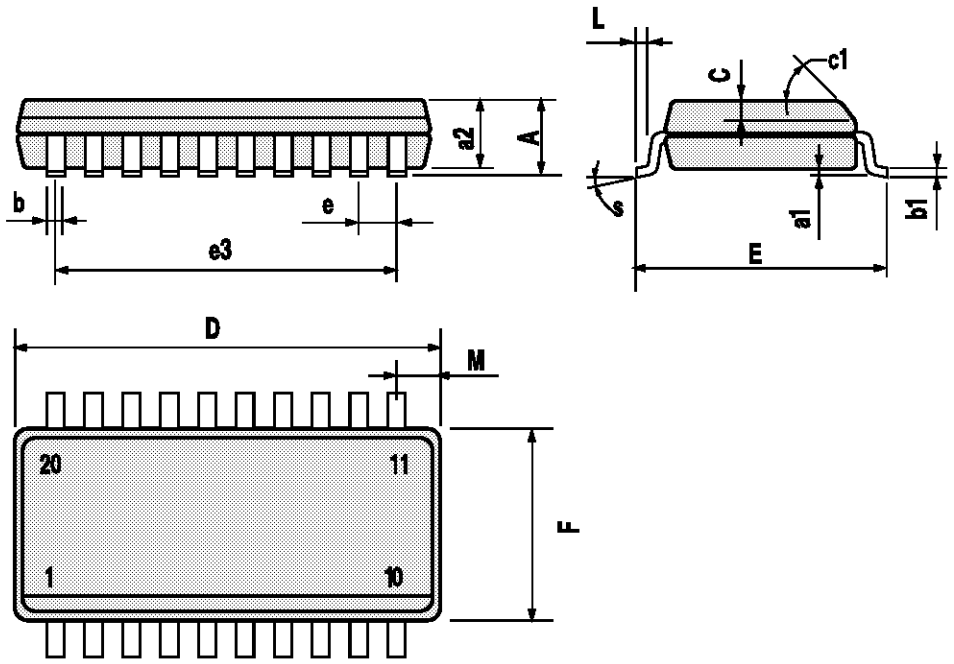

Information furnished is believed to be accurate and reliable. However, SGS-THOMSON Microelectronics assumes no responsibility for the consequences of use of such information nor for any infringement of patents or other rights of third parties which may result from its use. No license is granted by implication or otherwise under any patent or patent rights of SGS-THOMSON Microelectronics. Specifications mentioned in this publication are subject to change without notice. This publication supersedes and replaces all information previously supplied. SGS-THOMSON Microelectronics products are not authorized for use as critical components in life support devices or systems without express written approval of SGS-THOMSON Microelectronics.

© 1994 SGS-THOMSON Microelectronics - All Rights Reserved
MULTIWATT® is a Registered Trademark of the SGS-THOMSON Microelectronics

SGS-THOMSON Microelectronics GROUP OF COMPANIES
Australia - Brazil - France - Germany - Hong Kong - Italy - Japan - Korea - Malaysia - Malta - Morocco - The Netherlands - Singapore - Spain - Sweden - Switzerland - Taiwan - Thaliand - United Kingdom - U.S.A.