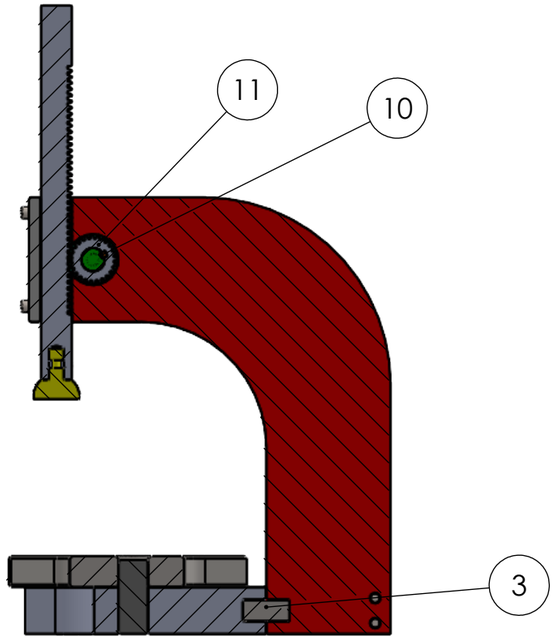

SECTION A-A

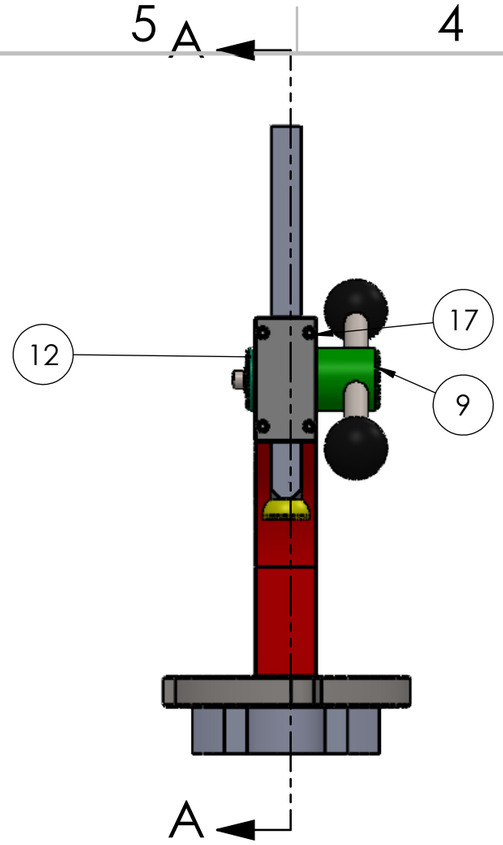

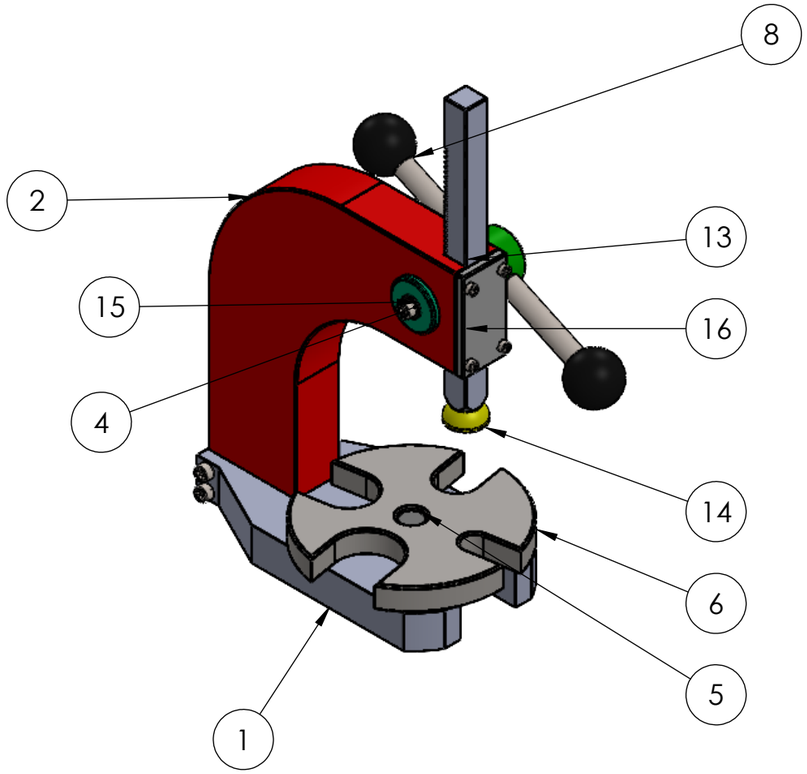

ITEM NO.	PART NUMBER	DESCRIPTION	QTY.
1	Part 1 Base	Cast Iron	1
2	.Frame	Cast Iron	1
3	0.75 pin	Steel	1
4	Socket hex cap screw 0.375	Steel	5
5	1 inch pin	Steel	1
6	press plate	HS	1
7	Handle Rod	Steel	1
8	knob	Steel	2
9	Part6 handle shaft	HS	1
10	Part10 shaft key	Steel	1
11	18. Spur Gear	Steel	1
12	Part9 shaft cap	Steel	1
13	Part7 gear rack	HS	1
14	Part11 ram head	HS	1
15	16. washer	Steel	1
16	Part12 front plate	Steel	1
17	15. SHCS 0.25-20	Steel	4

UNLESS OTHERWISE SPECIFIED:
DIMENSIONS ARE IN MILLIMETERS
SURFACE FINISH:
TOLERANCES:
LINEAR:
ANGULAR:

FINISH:

DEBURR AND BREAK SHARP EDGES

DO NOT SCALE DRAWING

REVISION

2022MEB1330 Arbor Press

	NAME	SIGNATURE	DATE
DRAWN	Priyanshu		14/11
CHK'D			
APPV'D			
MFG			
Q.A			

TITLE:

ME202 Project

MATERIAL:

DWG NO.

2022meb1330_Arbor Press Assem

A3

WEIGHT:

SCALE:1:5

SHEET 1 OF 1