FIRST TERM EXAMINATION [SEPT. 2015]
FIFTH SEMESTER [B.TECH]
DIGITAL COMMUNICATION [ETEC–303]

Time. 1.30 Hours **M.M. : 30**

Note: *Q No.1 is compulsory. Attempt any two from the rest of the Questions.*

(2×5=10)

Q.1. (*a*) Explain the terms

(*i*) Probability **(*ii*) Random process**

Ans. (*i*) Probability: It is a concept to indicate the chance for occurance of certain event say 'A'.

The Probability for event 'A' is defined as

$$P(A) = \underset{N \to \infty}{lt} \frac{n_A}{N}$$

where n_A : No of events in favour of A

N : Total No. of such events.

(*ii*) Random Process: It is the outcomes shown by a continuous random variable to indicate the response of a system in probabilistic manner.

Random process may be of stationary or Non-stationary type.

Q.1. (*b*) Discuss the Quantization and Companding.

Ans. Quantization: It is a step used in the process of analog signal to digital signal Conversion.

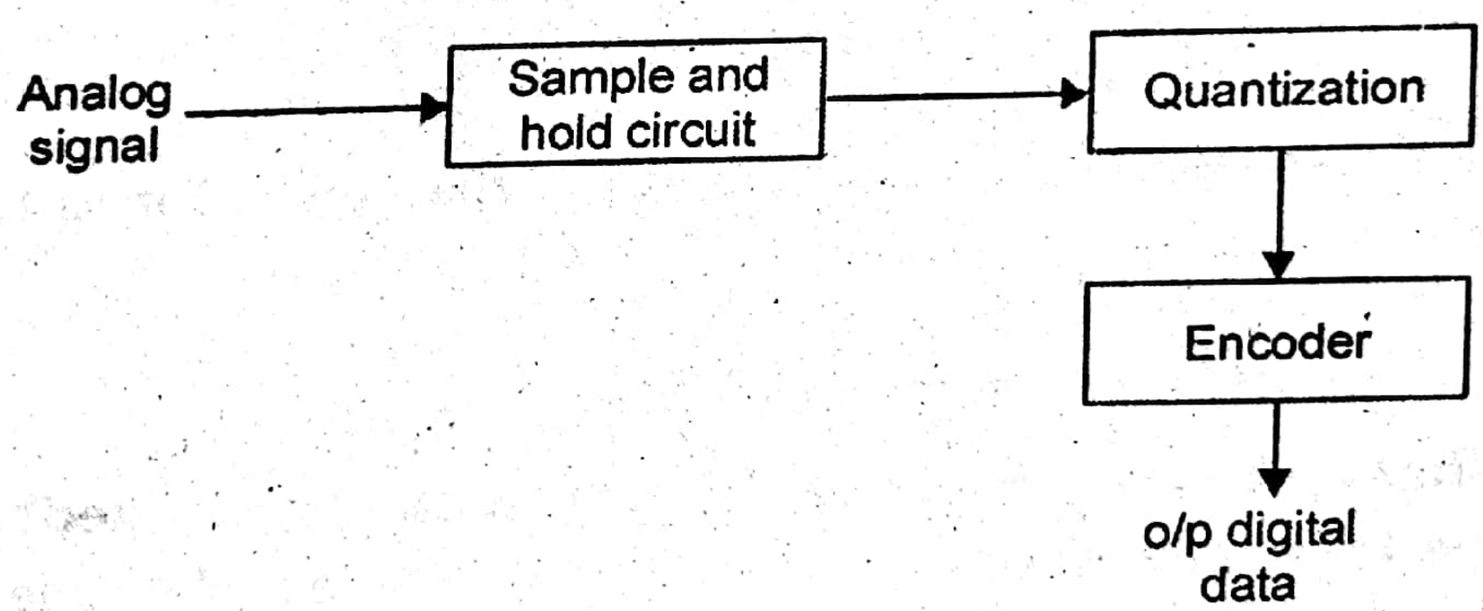

In the quantization process, a fractional value signal is converted to the well defined integer value which is given by the levels assigned at different values in amplitude direction.

Companding: This word is made up of two terms:

(1) Compressing

(2) Expanding.

Companding is done to protect the low frequency weak signal from the attenuation and hence to improve the signal to noise ratio at the receiver.

Companding is done logarithmically

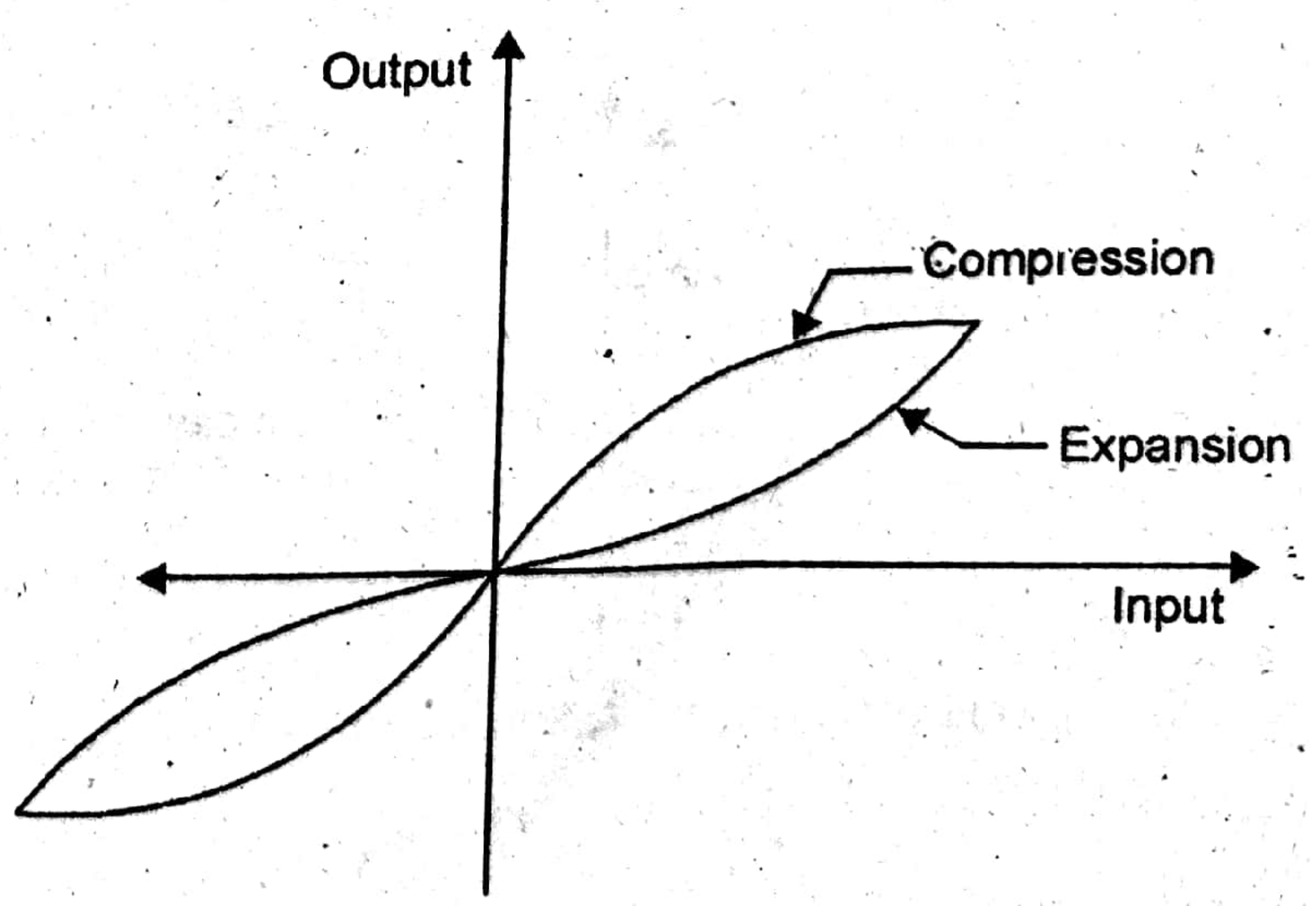

Q.1. (c) Signal to Noise Ratio of PCM.

Ans. For (PCM) system signal power is given by $\overline{m^2(t)}$

where $\overline{m^2 t}$ indicate the square of the average value.

Noise in (PCM) is given by (No)

$$N_o = \frac{m_p^2}{3L^2}$$

This is also called as the quantization noise (N_q). Here m_p indicate the peak value of the message signal. L is the no. of levels used to quantize the given signal.

So now the signal to noise ratio for the (PCM) is given by:

$$\left(\frac{S}{N}\right)_o = \frac{\frac{\overline{m^2(t)}}{m_p^2}}{3L^2} = 3L^2 \frac{\overline{m^2(t)}}{m_p^2}$$

Q.1. (d) Discuss the Ergodic Process.

Ans. Ergodic Process: It is that type of random process in which the time average is same as the ensemble average.

Let the time average be $<x(t)>$

$$<x(t)> = \lim_{T\to\infty} \frac{1}{T} \int_{-T/2}^{T/2} x(t)dt$$

Let $x(t)$ be the ensemble average of the $x(t)$ of the sample function at t and since

$R_x(t_1, t_2) = \overline{X_1 X_2}$

Hence for any process to be ergodic in sense, $\overline{x(t)} = < x(t) >$

Q.1. (e) What is slope overload error? How it can be avoided?

Ans. Slope Overload error: In the delta modulation when the slope of input message signal sharply increases and becomes greater than the slope of staircase signal then error occurs which is called as the slope overload error.

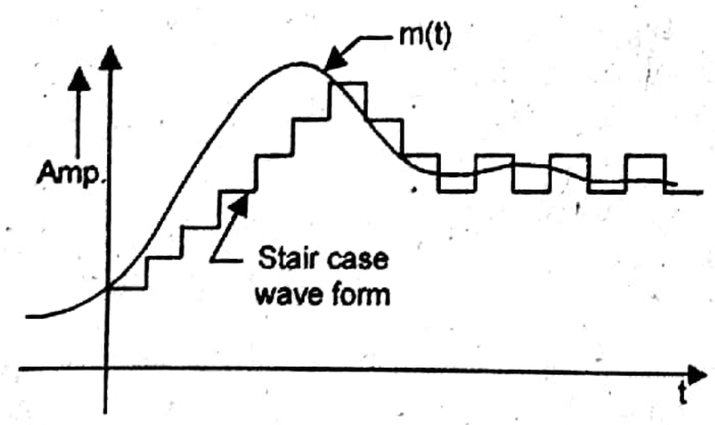

Let $m(t)$ be $A_m \sin w_m t$, then slope of $m(t)$ is given by

$$\frac{d}{dt}(m(t) = \frac{d}{dt}(A_m \sin w_m t)$$

$$= (A_m \cos w_m t)\, w_m$$

$$= w_m A_m \cos w_m t$$

And Slope of stair case wave form is given by

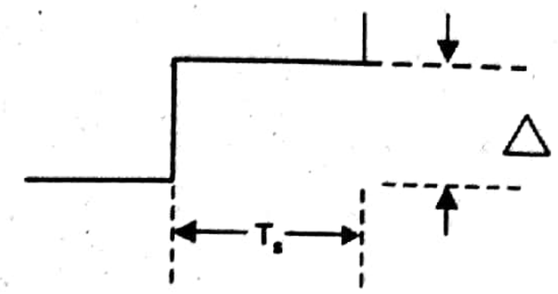

$$\text{Slope} = \frac{\Delta}{T_S}$$

error can be avoided if

$$A_m w_m \cos w_m t \le \frac{\Delta}{T_s}$$

Q.2. (a) Draw the different Line Code Waveforms for the data '00110110'. **(5)**

(i) NRZ bipolar code **(ii) RZ unipolar**
(iii) AMI **(iv) Manchester Coding**
(v) Differential Manchester coding

Ans. Given data is '00 110 11 0'

(i) NRZ 0 0 1 1 0 1 1 0

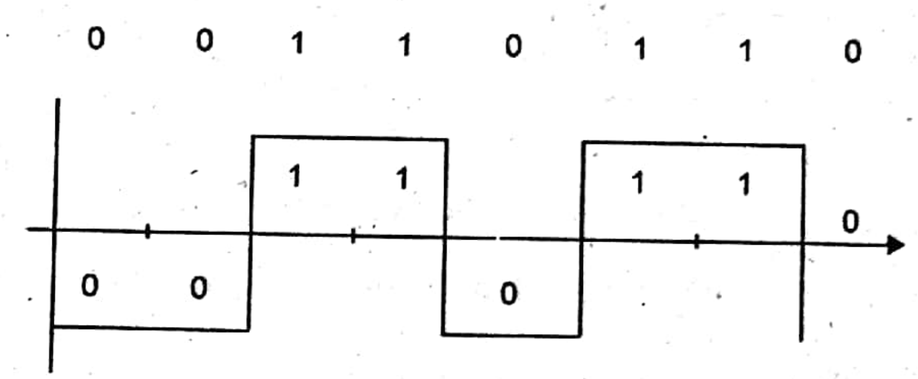

(ii) RZ Unipolor:

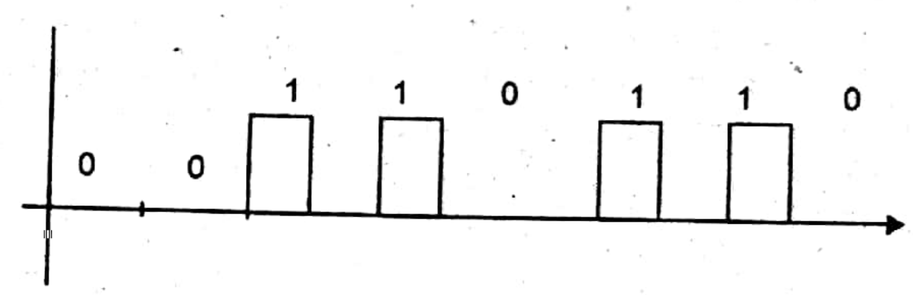

(iii) AMI

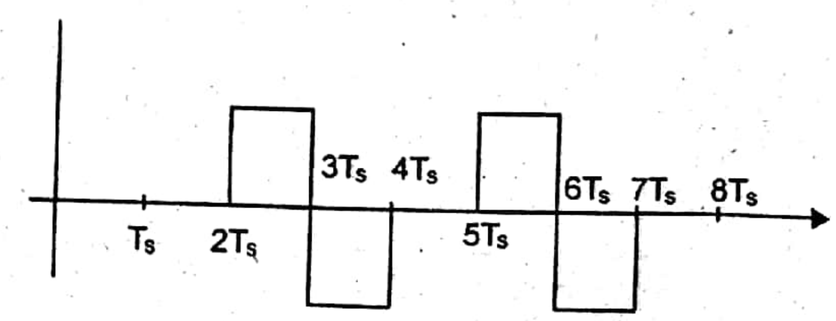

(iv) Manchester Encoding Scheme:

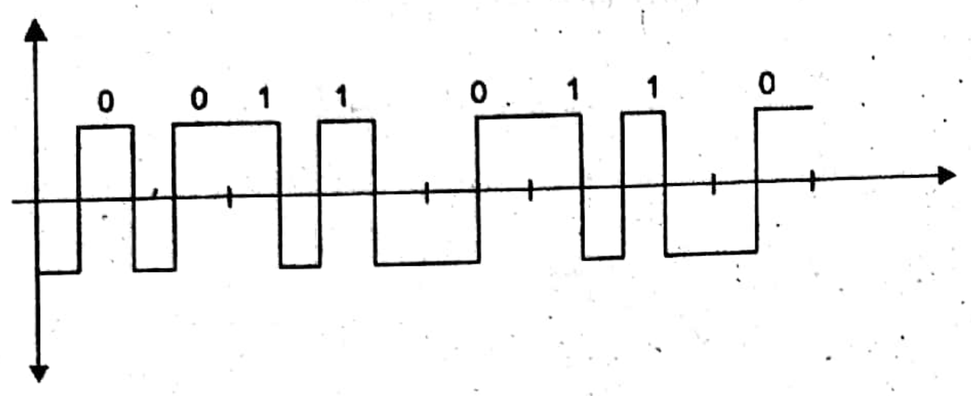

(v) Differential Manchester coding.

Ans.

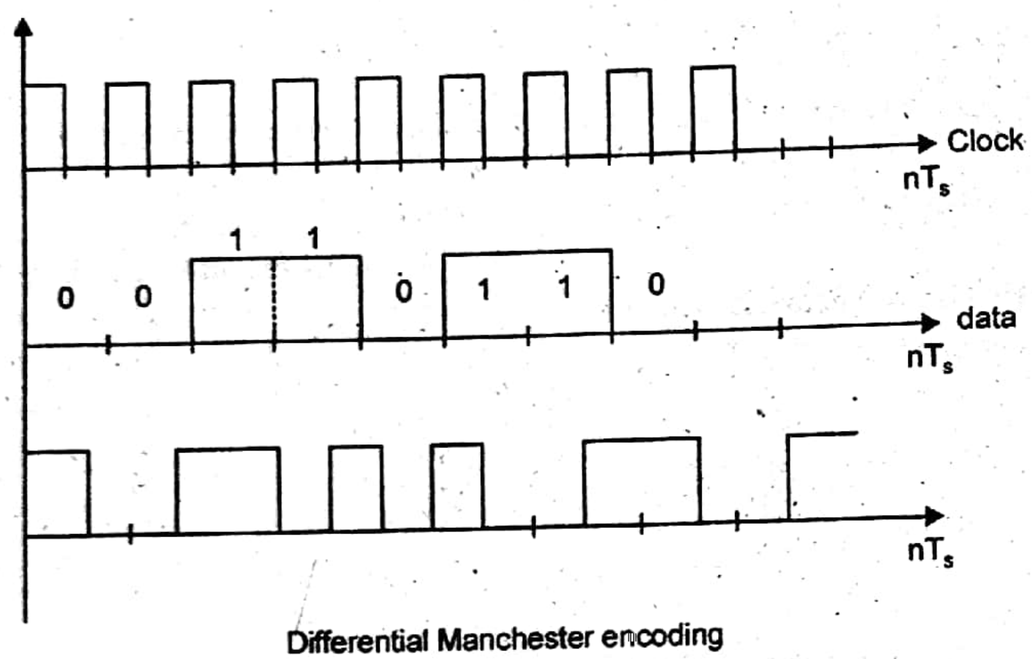

Differential Manchester encoding

Q.2. (b) Explain the PDF and CDF and derive the relationship between CDF and PDF. **(5)**

Ans. PDF: PDF stands for probability density function. It defines the variation of any continuous random variable. PDF of any random variable indicates how much information it is containing in which region.

It also indicate the probability of defined values, if PDF of any random variable comes out be flat. It means the out comes of the given random variable are equiprobable. Some examples are as follow:

(1) Gaussian PDF

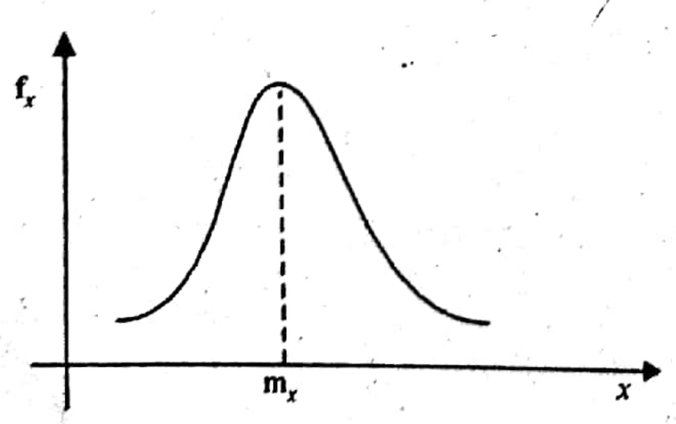

(2) Constant PDF

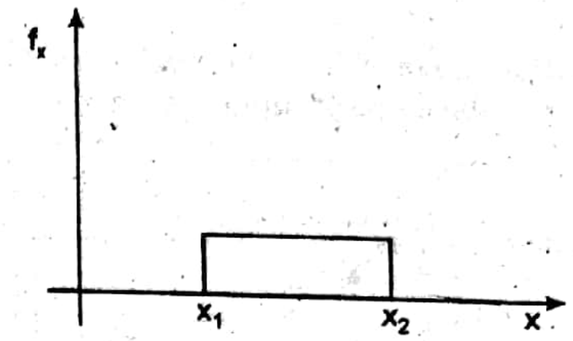

(3) Rayleigh PDF

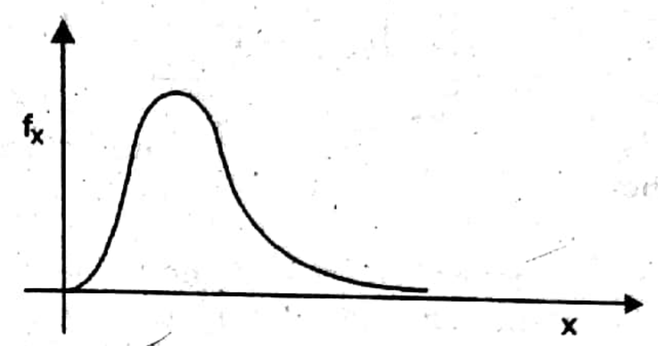

CDF: It stands for Cumulative distribution funtion. It is a monotonically increasing function.

Value of the CDF gives, the total probability of any event upto a certain value. For example

$$F_X(5) = P(x \le 5)$$

This relation gives all those options for which the probability of the given random variable will be less than or upto 5.

CDF is given by F_X and above figure shows that it is always an increasing function

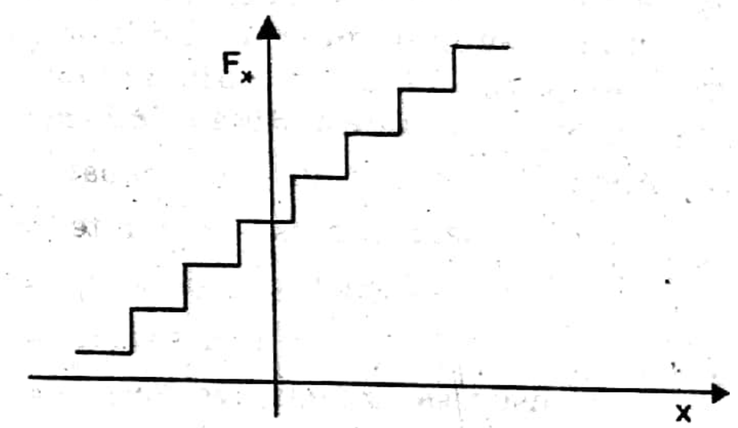

PDF (f_x) and CDF (F_x) are related to each other by the following relation:

$$f_X(x) = \int_{-\infty}^{x} F_X(x)dx$$

Q.3. (a) Discuss in detail modulation and demodulation in adaptive delta modulation. **(5 + 5 = 10)**

Ans.

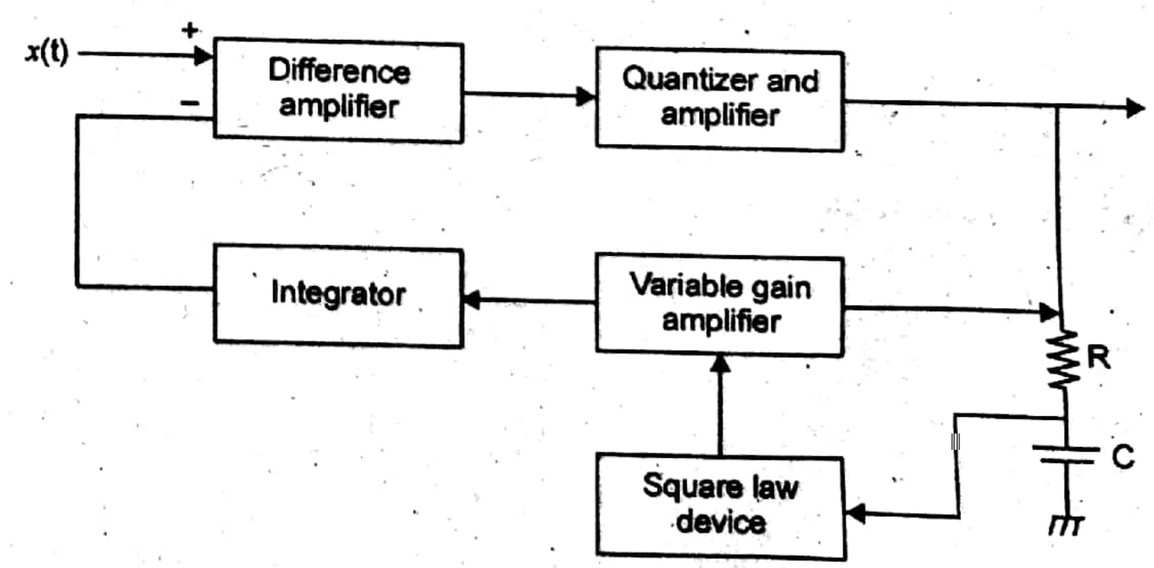

Adaptive delta modulation removes the problems found in the normal delta modulation.

In this type of modulation the mechanism is such that it changes the slope of stair case ramp signal according to the slope of input message signal.

Working of adaptive delta modulation is depicted in the block diagram as given above.

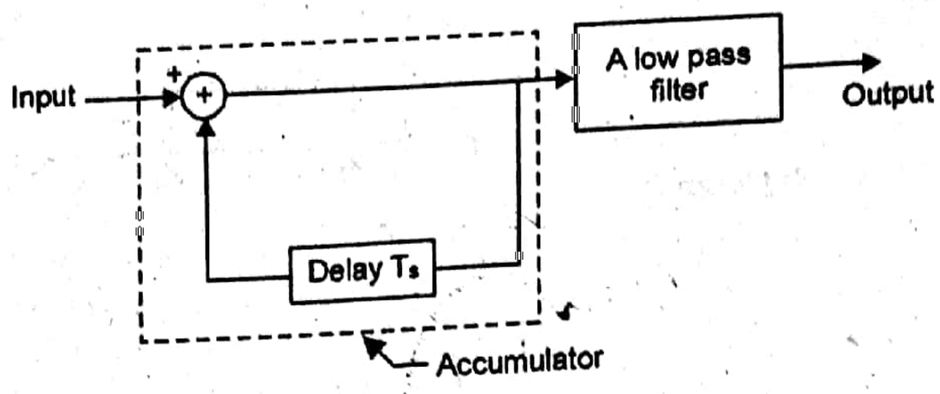

The variable gain amplifier helps to change the amplitude of the stair case ramp signal.

Demodulation is easily achieved by the following circuit:

A delay of T_s is given by the circuit to make a synchronisation with that of transmitter. Low pass filter makes the changes smooth which matches with the original signal.

Q.3. (*b*) A signal having bandwidth equal to 4 kHz is sampled, quantized and coded by a PCM system. The coded signal is then transmitted over a transmission channel of supporting a transmission rate of 100 K bits/sec. Determine the maximum signal to noise ratio that can be obtained by this system. The input signal has peak value of 6 volts and rms value of 0.4 V.

Ans. Bandwidth of the signal = 4KHz

Channel transmission rate = 100 k bits/sec.

Signal peak value m_p = 6 volt

r. m. s value = 0.4 volt

Transmission rate is given by $nf_s = n2f_m$

$= 2 \times n \times 4000 = n \times 8000$

But $n \times 8000 = 100 \times 10^3$ bits/sec.

$$\Rightarrow \quad n = \frac{100}{8} = 12.5 \text{ bits/sec}$$

or n = 13 bits per sample

but $L \le 2^n$

or $L = 8 \times 1024$

$$\Delta = \frac{2A}{L} = \frac{6}{8 \times 1024}$$

Hence Noise power is given as

$$\frac{\Delta^2}{12} = \frac{6 \times 6}{(8 \times 1024)^2} \times \frac{1}{12}$$

$$= \frac{(7.32)^2 \times 10^{-8}}{12} = 4.5 \times 10^{-8}$$

Signal Power is given by

$$\overline{m^2(t)} = 3 \times 3 = 9 \text{ watt}$$

$$10 \log_{10}(S/N) = 10 \log_{10}\left(\frac{9}{4.5} \times 10^8\right)$$

$$= 10 \log_{10}(2 \times 10^8)$$

$$= 10 \log_{10}(2 + 80) \text{ dB.}$$

Q.4. (*a*) Discuss the Binomial Distribution and derive expression for PDF and CDF of Binomial Distribution. (5 + 5 = 10)

Ans. Binomal distribution functions are used when the events under observation are of binary nature. Here the Bernaulli trial is done to find the possible outcome.

Let probobility of correct result = q

Then probability of wrong result = $1 - q$

Then out of the n trials, the probability of 'k' events to be correct is

$$P_X(k) = n_{c_k} q^k (1-q)^{n-k}$$

$$= \frac{n!}{(n-k)!k!} q^k (1-q)^{n-k}$$

This value defined the variation of PDF of binomial distribution. CDF is obtained by taking integration on both the sides under the following constraints.

$$F_X(x) = \int_{-\infty}^{x} P_X(k)dx$$

Q.4. (*b*) Discuss the physical significance of PSD and its different properties. Also explain Central Limit Theorem.

Ans. Power spectral density function and correlation function are very much related together by the following relation:

$$S_X(f) = \int_{-\infty}^{\infty} R_X(\tau)\exp(-j2\pi f\tau)d\tau$$

and

$$R_X(\tau) = \int_{-\infty}^{\infty} S_X(f)\exp(j2\pi f\tau)df$$

Properties of PSD:

(1) The zero frequency value of PSD is the total area under the curve of auto correlation function

$$\Rightarrow \quad S_X(o) = \int_{-\infty}^{\infty} R_X(\tau)d\tau$$

(2) Mean square value of a stationary process equals the area under the graph of the power spectral density

$$\Rightarrow \quad E[x^2(t)] = \int_{-\infty}^{\infty} S_x(f)df$$

(3) Power spectral density of a stationary process is always non-negative e.g.

$$S_X(f) \geq 0 \text{ for all } f.$$

(4) Power spectral density of a real valued random process is an even function of frequency

$$\text{e.g. } S_X(-f) = S_X(f)$$

(5) PSD when appropriately normalized has the properties usually associated with a probobility dinsity function.

$$P_X(f) = \frac{S_x(f)}{\int_{-\infty}^{\infty} S_x(f)df}$$

As per central limit theorem when many variable (say 'n') of any distribution type pass through a LTI system, the output variable approaches to a Gaussian distribution, as 'n' increases.

SECOND TERM EXAMINATION [NOV. 2015]
FIFTH SEMESTER [B.TECH]
DIGITAL COMMUNICATION [ETEC–303]

Time. 1.30 Hours **M.M. : 30**

Note: *Q No.1 is compulsory. Attempt any two from the rest of the Questions.*

Q.1. (*a*) What is inter-symbol interference? **(2 × 5 =10)**

Ans. Inter Symbol Interference (ISI) refers to the over lapping of low frequency signal with that of the high frequency signal

ISI can be avoided by providing the proper filtering action or by controlling the flow (speed) of data transmission.

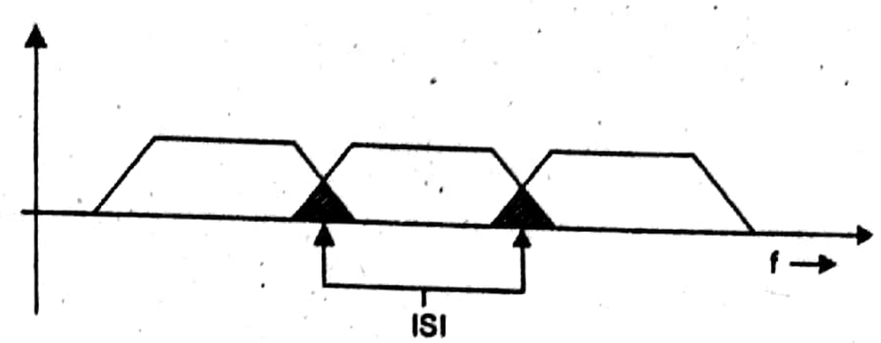

Q.1. (*b*) Define probability of error (P_e).

Ans. Probability of error defines the performance of any system. Bit error rate becomes a close function of probability of error. Probability of error is simply denoted by P_e and it depends on the type of system. For example P_e for ASK is given by

$$P_e = Q\left(\sqrt{\frac{A^2T_b}{4\eta}}\right)$$

where T_b is the bit period and $Q(x)$ is the error function of variable x.

Q.1. (*c*) Give two applications for eye pattern.

Ans. Eye pattern is an important tool and mechanism to identify:

(*a*) How much is the channel noisy

(*b*) What can be the optimum data rate

(*c*) What will be the probability of error

(*d*) What will be tolerance for the noise to maintain proper signal to noise ratio.

Q.1. (*d*) Draw the FSK waveform for 011011.

Ans. For the given binary data '0 11 0 11' the frequency will change in binary form.

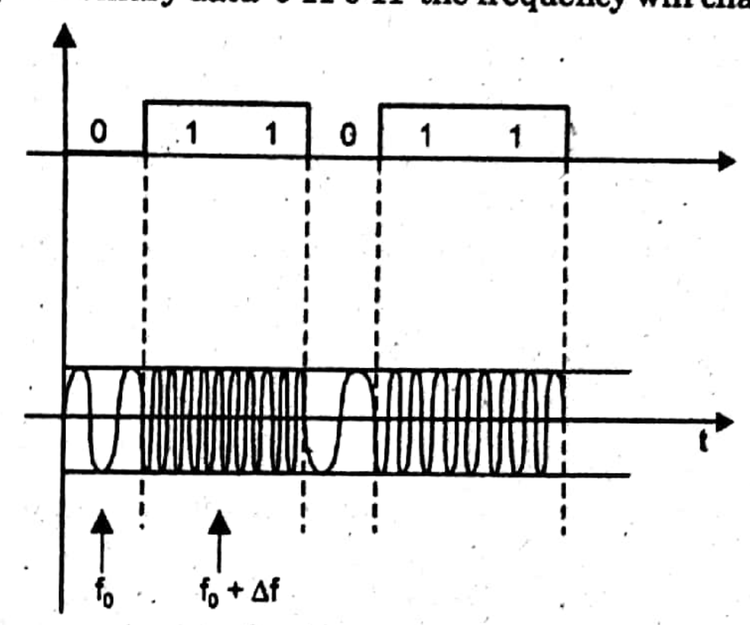

Shift in the frequency is given by Δf

Q.1. (e) What is meant by DPSK?

Ans. 'DPSK' stands for differential phase shift keying. Here a binary sequence is compared with its delayed circuit.

The digital information is differentially encoded in the carrier phase at the transmitter. Transmitter for 'DPSK' encoder is given as follow:

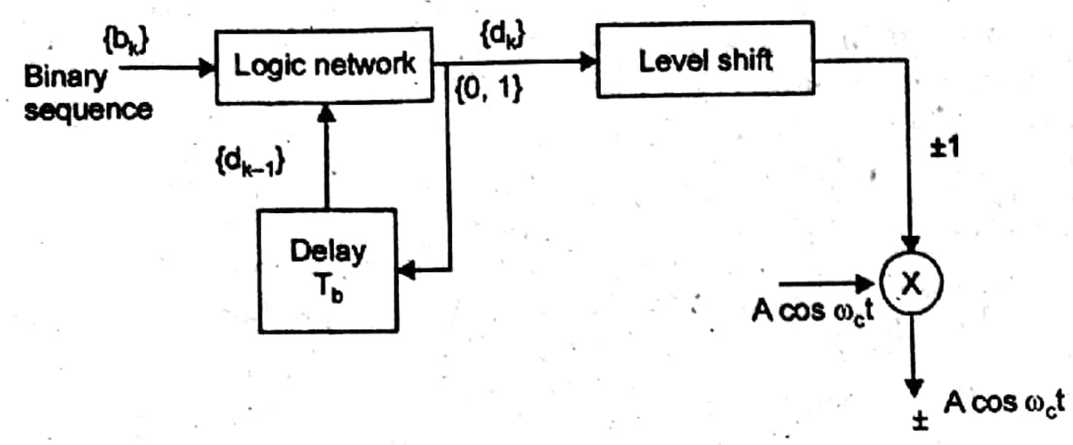

Q.2. (a) Explain in detail about the GRAM Schmidt orthogonalisation procedure. **(5 + 5 = 10)**

Ans. GRAM schmidt orthogonalisation procedure:

This is a systematic approach to extract the basis signals from the known signal set. Projection of vector say X_2 on to another vector say x, is calculated on the basis of the following relation:

$$C_{12} = \frac{< x_1, x_2 >}{\|X_1\|^2} y_1$$

The error in this approximation is the vector $X_2 - C_{12} X_1$

$$\text{error vector} = x_2 - \frac{< x_1, x_2 >}{\|X_1\|^2} x_1$$

Let us choose the option as

$$y_1 = x_1$$

then

$$y_2 = x_2 - \frac{< x_1, x_2 >}{\|x_1\|^2} x_1$$

$$= x_2 - \frac{(y_1, x_2)}{\|y_1\|^2} y_1$$

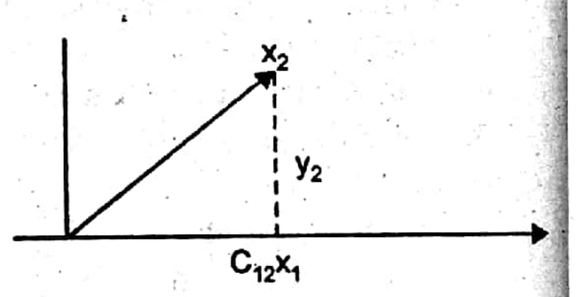

Then third orthogonal vector can be derived as $y_3 = x_3$ – sum of projection X_3 on y_1 and y_2

$$= x_3 - \frac{(y_1, x_3)}{y_1} - \frac{(y_2 - x_3)}{\|y_2\|}$$

in this similar way $y_1, y_2 - y_N$ can be obtained where $y_1 = x_1$.

Q.2. (b) Derive an expression for the transfer function of the Optimum Receiver.

Ans. Optimum receiver distinguishes between $S_1(t)$ and $S_2(t)$ from the noisy version of $S_1(t)$ and $S_2(t)$ with minimum probability of error. This is done by an appropriate choice of r^2. Here

$$r^2 = \frac{[So_2(T_b) - So_1(T_b)]^2}{N_o}$$

and

$$So_2(T_b) - So_1(T_b) = \int_0^{T_b} [S_2(z) - S_1(z)] h(T_b - z) dz$$

$$N_o = \int_{-\infty}^{\infty} G_n(f) |H(f)|^2 df$$

$P(t) = S_2(t) - S_1(t)$, then for the numerator to be maximised.

$$So_2(T_b) - So_1(T_b) = P_o(T_b) = \int_0^{T_b} p(z) h(T_b - z) dz$$

$$= \int_{-\infty}^{\infty} p(z) h(T_b - z) dz$$

Here $p(t) = 0$ for $t < 0$ and $h(x)$ o for $\lambda < 0$

then $P_o(f) = p(f) H(f)$

where $P_0(f)$ is fourier transform of $P_0(t)$

so

$$P_o(T_b) = \int_{-\infty}^{\infty} p(f) H(f) \exp(j2\pi f T_b) df$$

then

$$\gamma^2 = \frac{\left| \int_{-\infty}^{\infty} H(f) p(f) \exp(j2\pi f T_b) df \right|^2}{\int_{-\infty}^{\infty} |H(f)|^2 G_n(f) df}$$

Then by applying the Schwarz's inequality

$$\frac{\left| \int_{-\infty}^{\infty} X_1(f) X_2(f) df \right|^2}{\int_{-\infty}^{\infty} |X_1(f)|^2 df} \le \int_{-\infty}^{\infty} |X_2(f)|^2 df$$

$$X_1(f) = H(f) \sqrt{G_n(f)}$$

$$X_2(f) = \frac{p(f) \exp(j2\pi f T_b)}{\sqrt{G_n(f)}}$$

then H(f) can be described as of the following form:

$$H(f) = K \frac{p^*(f) \exp(-j2\pi f T_b)}{G_n(f)}$$

K is any arbitrary constant.

Q.3. (a) Derive the expression for bit error probability due to a matched filter, Explain the basis of operation of a matched filter receiver with suitable diagrams. **(4 + 6 10)**

Ans. A reciever structure using the matched filter is shown by a simple diagram given as follow:

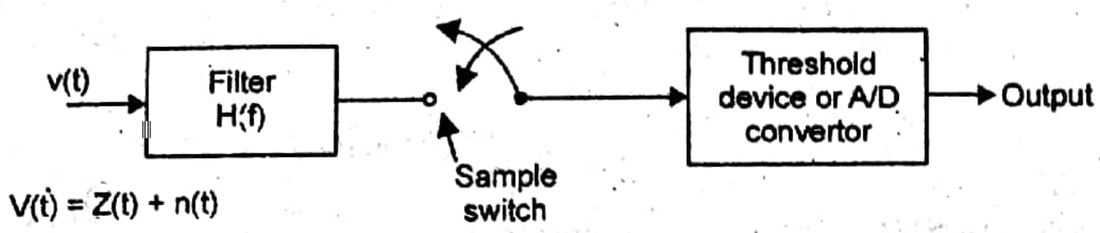

Signal is passed through the filter having transfer function H(*f*) which optimizes the performance of the receiver.

The sample switch turns on only at the time of incoming of the signal which also improves the signal to noise ratio. Threshold device works on the predefined values and accordingly produces output.

Bit error probability is calculated on the following facts:

$$P_e = P\{b_k = 0 \text{ and } V_o(KT_b) \geq\} T_o;$$

or

$$b_k = 1 \text{ and } V_o(kT_b) < T_o\}$$

$$= \frac{1}{2} P\{V_o(KT_b)\} \geq T_o | b_{k=0}\} + \frac{1}{2} P\{V_o(KT_b) < T_o | b_k = 1\}$$

$$\Rightarrow \quad P_e = \frac{1}{2}\int_{T_o}^{\infty} \frac{1}{\sqrt{2\pi N_o}} \exp\left(-\frac{(V_o - So_1)^2}{2No}\right) dv_o$$

$$+ \frac{1}{2}\int_{\infty}^{T_0} \frac{1}{\sqrt{2\pi No}} \exp\left(\frac{-(V_o - So_2)^2}{2No}\right) dvo$$

and the conditional pdf's for V_0 is given as follow:

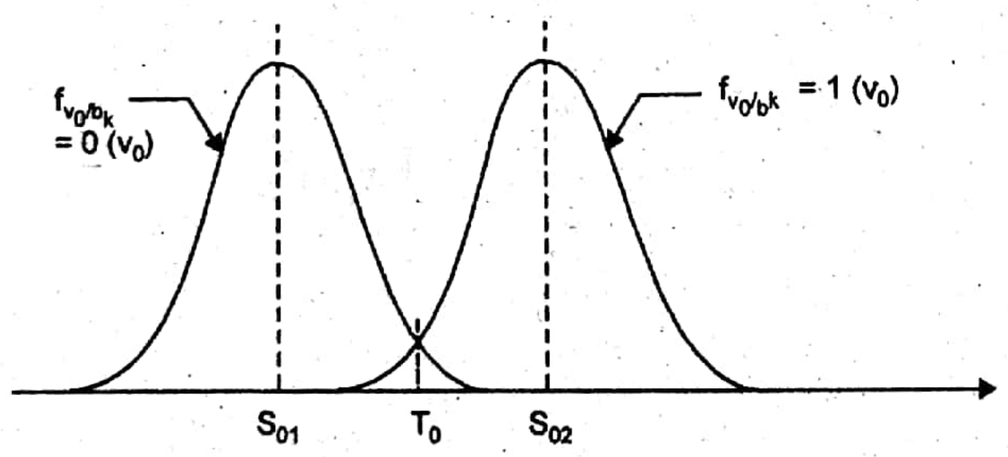

When the avergae value of the signal is taken into account then

$$P_e = \int_{\frac{S_1 + So_2}{2}}^{\infty} \frac{1}{\sqrt{2\pi N_o}} \exp\left(-\frac{(V_o - So_1)^2}{2No}\right) dv_o$$

$$= \int_{\left(\frac{So_2 - So_1}{2\sqrt{N_o}}\right)}^{\infty} \frac{1}{\sqrt{2\pi N.}} \exp\left(-\frac{2^2}{2}\right) dz$$

Q.3. (b) Write the bit error probability due to coherent ASK, PSK and FSK systems. Compare the performance of these systems.

Ans. (1) Coherent ASK: The local signal is assumed to be as $S_2(t) - S_1(t) = A \cos w_c t$. The receiver makes a decision about which of the two signal $S_1(t)$ or $S_2(t)$ is present. Errors may occur due to noise at the receiver.

$$So_1(KT_b) = \int_o^{Tb} S_1(t)[S_2(t) - S_1(t)]dt = 0$$

during the signalling interval and

$$So_2(kT_b) = \int_o^{T_b} S_2(t)[S(t) - S_1(t)]dt$$

$$= \frac{A^2}{2} T_b$$

Then Probability of error for ASK is

$$P_e = \int_{\frac{1}{2}\gamma_{max}}^{\infty} \frac{1}{\sqrt{2\pi}} \exp\left(-\frac{2^2}{2}\right) dz$$

$$= Q\left(\sqrt{\frac{A^2 T_b}{4\eta}}\right)$$

(2) Coherent PSK: Here phase of the carrier signal changes in accordance with the binary signal.

Here

$$So_1(KT_b) = \int_{(K-1)T_b}^{KT_b} S_1(t)[S_1(t) - S_2(t)S_1]dt$$

$$= -A^2 T_b$$

$$So_2(KT_b) = \int_{(k-1)T_b}^{KT_b} S_2(t)[S_2(t) - S_1(t)]dt$$

$$= A^2 T_b$$

Then the Probability of error (P_e) is given by

$$P_e = Q(\gamma_{max}/2)$$

where

$$\gamma_{max}^2 = \frac{2}{\eta}\int_o^{T_b} (2A \cos w_c t)^2 dt$$

$$= \frac{4A^2 T_b}{\eta}$$

or $$P_e = Q(\sqrt{A^2T_b/\eta}$$

and $$S_{av} = A^2/2 = \text{Average signal power}$$

$$E_{av} = (A^2/2)T_b = \text{Signal energy}$$

then $$P_e = Q\left(\sqrt{\frac{(2S_{av}Tb}{\eta}}\right)$$

$$= Q\left(\sqrt{2E_{av}/\eta}\right)$$

(3) Coherent FSK: In FSK modulation scheme:

$$S_2(t) - S_1(t) = A\cos(w_c t + w_d t) - A\cos(w_c t - w_d t)$$

then input to the A/D convertor at sampling time $t = KT_b$ is $S_{01}(KT_b)$ or $S_{02}(KT_b)$ where

$$S_{02}(kT_b) = \int_o^{T_b} S_2(t)[S_2(t) - S_1(t)]dt$$

$$So_1(KT_b) = \int_o^{T_b} S_1(t)[S_2(t) - S_1(t)]dt$$

$$P_e = Q(\gamma_{max}/2)$$

$$\gamma^2_{max} = \frac{2}{\eta}\int_o^{T_b}(S_2(t) - S_1(t)]^2 dt$$

Taking $S_2(t) = A\cos(w_c t + w_d t)$

$$S_1(t) = A\cos(w_x t - w_d t)$$

$$\gamma^2_{max} = 2.42(A^2T_b/\eta)$$

$$P_e = Q\left(\sqrt{0.61(A^2T_b/\eta)}\right)$$

Comparison of ASK, FSK and PSK

Scheme	BW	P_e	SNR	Equipment complexity
ASK	$2r_b$	$Q\left(\sqrt{\frac{A^2T_b}{4\eta}}\right)$	14.45	Moderate
FSK	$>2r_b$	$Q\left(\sqrt{\frac{0.61A^2T_b}{\eta}}\right)$	10.6	Major
PSK	$\simeq 2r_b$	$Q\left(\sqrt{\frac{A^2T_b}{\eta}}\right)$	8.45	Major

Q.4. (a) Distinguish coherent and non-coherent binary modulation technique **(4 + 6 = 10)**

Ans. Coherent detection is based on the correlation reception where the output signals are decided on the basis of threshold detection

As shown in the figure

$\phi_1(t)$ and $\phi_2(t)$ are given as follow:

$$f_H = mf_b \text{ and } f_L = nf_b$$

$$\phi_1(t) = \sqrt{\frac{2}{T_b}}\cos(2\pi mf_b t)$$

$$\phi_2(t) = \sqrt{\frac{2}{T_b}}\cos(2\pi nf_b t)$$

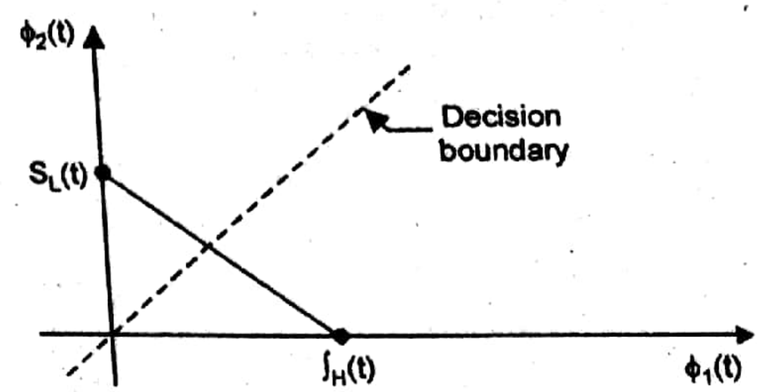

Signal for low & high frequency are given as follow:

$$S_H(t) = \sqrt{P_sT_b}\sqrt{\frac{2}{T_b}}\cos(2\pi f_H t)$$

$$S_L(t) = \sqrt{P_sT_b}\sqrt{\frac{2}{T_b}}\cos(2\pi f_L t)$$

Here

$$f_H = f_c + \frac{\Omega}{2\pi} = \text{and } f_2 = f_c - \frac{\Omega}{2\pi}$$

Also we can write

$$S_H(t) = \sqrt{P_sT_b}\phi_1(t)$$

$$S_L(t) = \sqrt{P_sT_b}\phi_2(t)$$

Non-Coherent Binary Modulation: Non-coherent system work over the following schematic, where there is no requirements of carrier synchronisation and as per the demodulation of the analog modulation, Non- coherent system work.

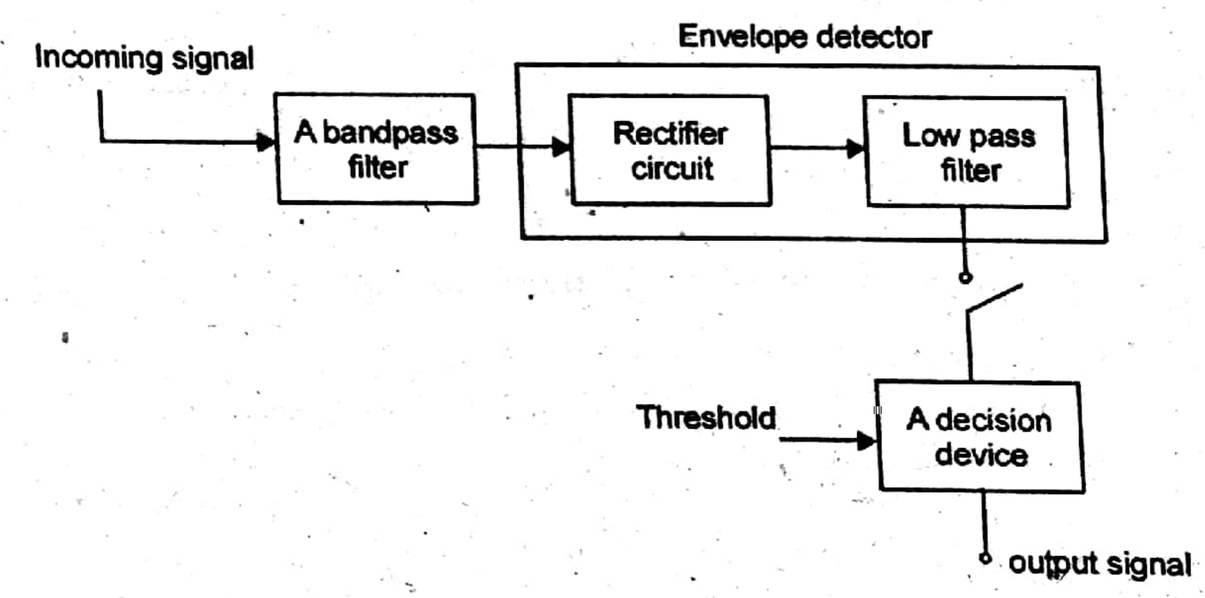

Hence this method work over some form of rectification and low pass filtering.

Q.4. (b) With required block diagram explain QPSK modulator and demodulator. Also draw the constellation diagrams and probability of error.

Ans. QPSK, stands for quadrature phase shift keying, that means it is having four phases along with the symbol and each symbol is having a group of two bits hence four combination and each combination is having an idential phase shift.

Bits	Phase
00	$\frac{3\pi}{4}$
01	$5\pi/4$
10	$\pi/4$
11	$7\pi/4$

and constellation diagram is given as follow:

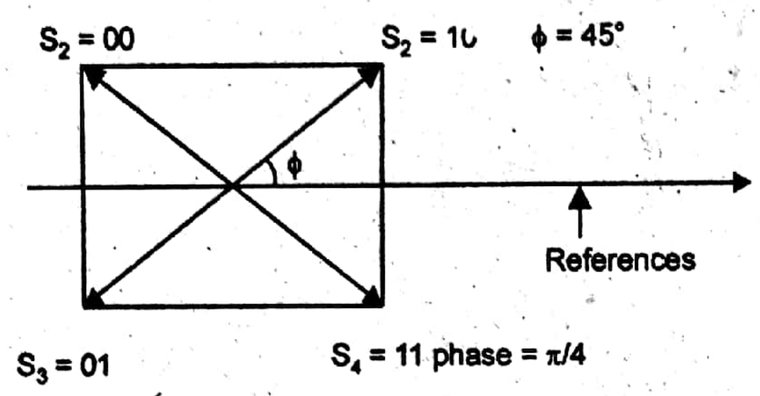

QPSK Modulator:

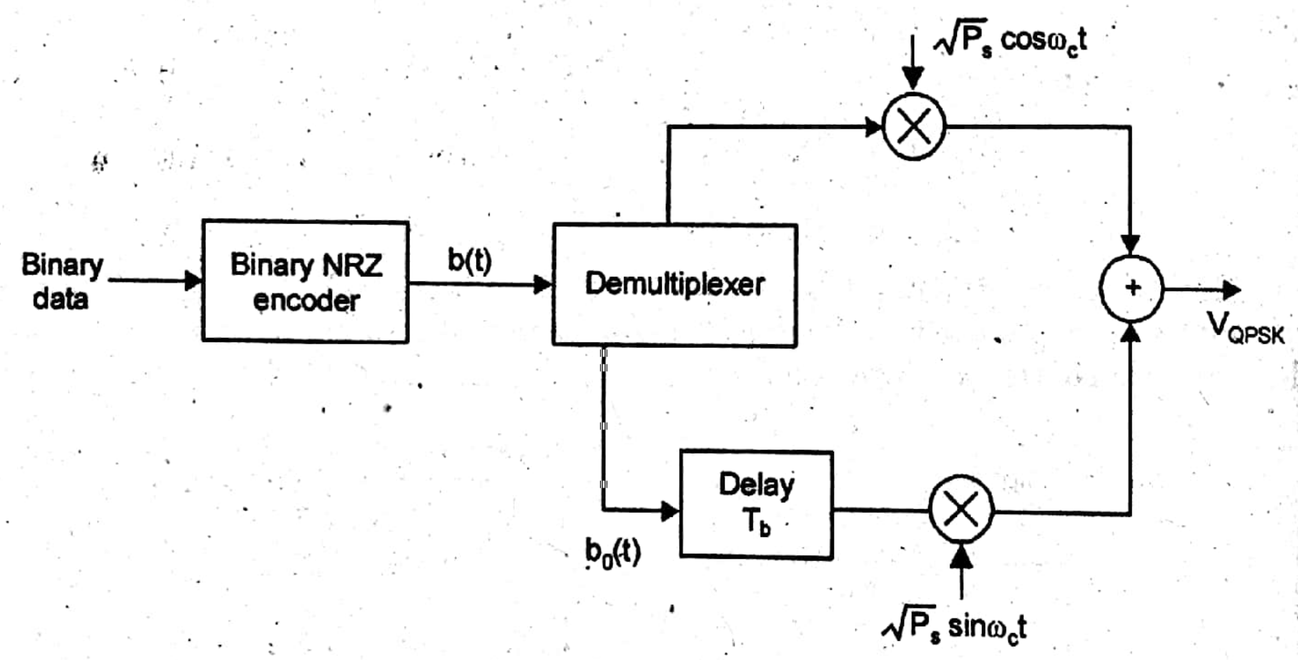

output signal V_{QPSK} can have the following form and can easily be derived from the given block digram.

$$V_{QPSK}(t) = \sqrt{2P_s}\cos\left[w_c t + (2m+1)\frac{\pi}{4}\right]$$

$$m = 0, 1, 2, 3$$

for m = 0

$$S_1 = \sqrt{2P_s}\cos\left[w_c t + \frac{\pi}{4}\right]$$

for m = 1

$$S_2 = \sqrt{2P_s}\cos\left[w_c t + \frac{3\pi}{4}\right]$$

Demodulation of the transmitted signal can easily be obtained from the following circuit block diagram

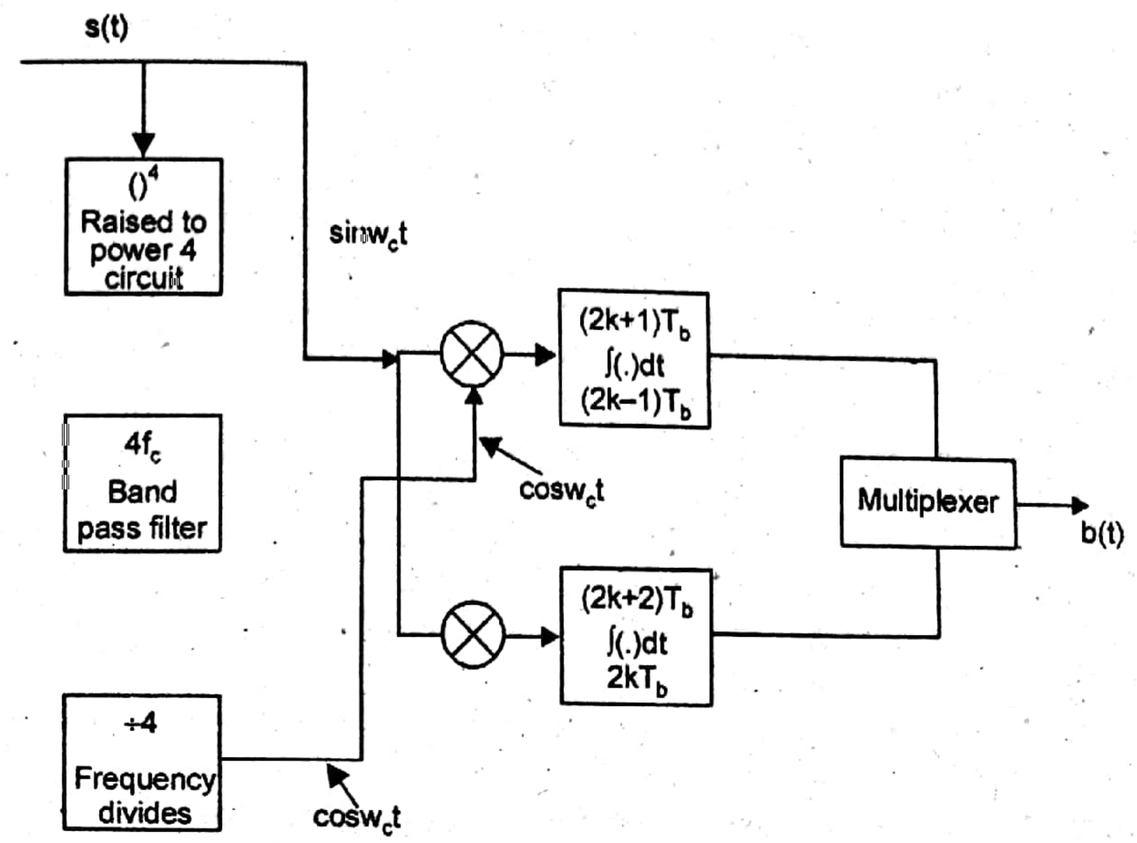

Spectrum of QPSK is observed as

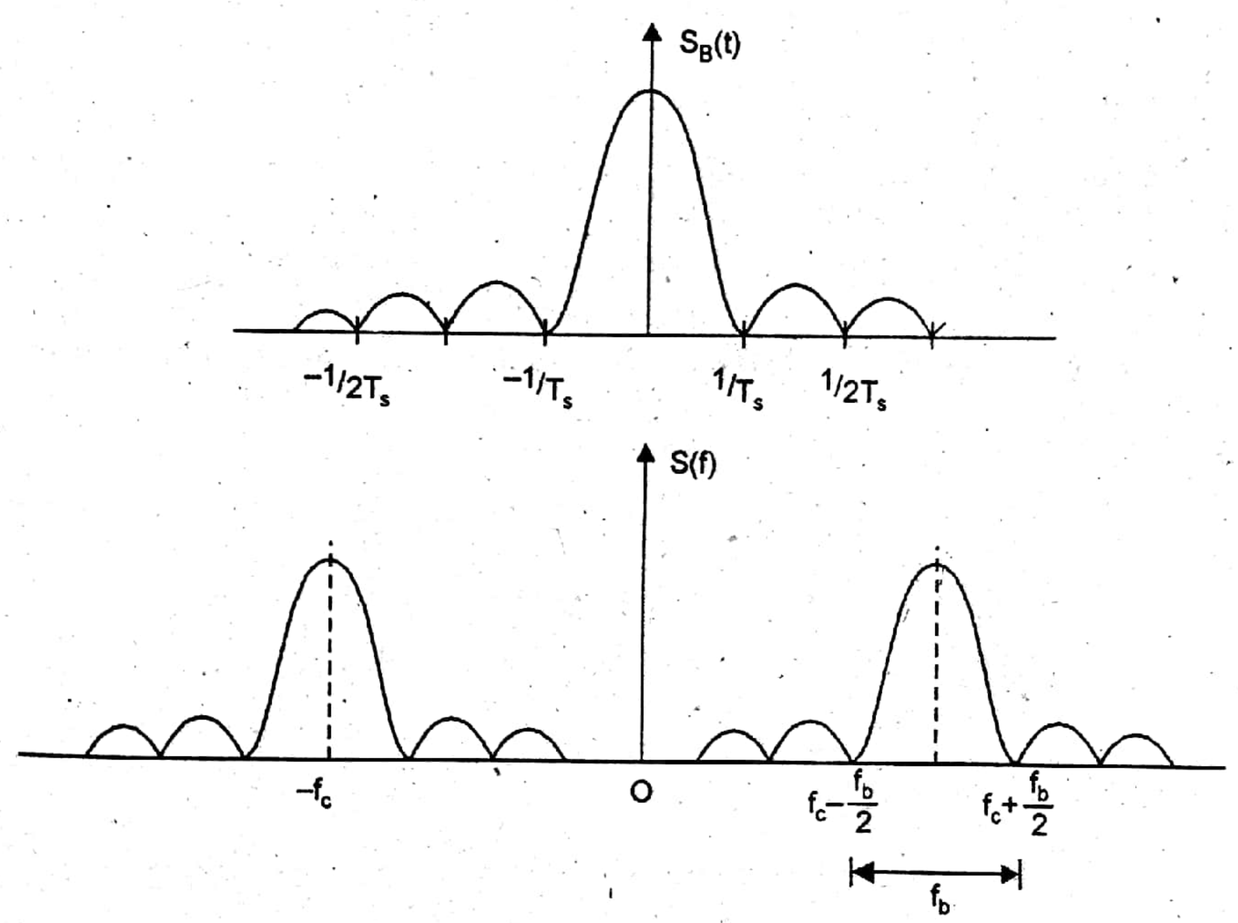

END TERM EXAMINATION [DEC. 2015]
FIFTH SEMESTER [B.TECH]
DIGITAL COMMUNICATION [ETEC–303]

M.M. : 75

Time. 3 Hours

Note: Attempt any five questions including Q.no. 1 which is compulsory.

Q.1. (a) Explain the signifcance of Central Limit Theorem. **(3)**

Ans. Central Limit Theorem: The central limit theorem is used when PDF of several independent random variables is to be obtained.

Statement of Central Limit Theorem: Under certain conditions, the probability density function of sum of a large number of independent random variables tends to approach Gaussian PDF, independent probability desntities of the variables.

Other Important Points about the central limit theorem may be described as under:

(*i*) The mean of the Gaussian PDF obtained by addition of N independent random variable is equal to the sum of means of the random variables being added.

(*ii*) The variance of Gaussian PDF is equal to the sum of variances of the N independent random variables which are being added.

(*iii*) The central limit theorem applies even when the individual random variables are not Gaussian.

(*iv*) This theorem applies in certain special cases even when the individual variables are not independent.

Q.1. (b) Distinguish between Convolution and Correlation. **(3)**

Ans. Convolution is a mathematical operation which is used to express the utput relationship in a linear time invariant system.

— Convolution of two time functions $x_1(t)$ and $x_2(t)$ is given as:

$$x_1(t) \otimes x_2(t) = \int_{-\infty}^{\infty} x_1(\tau) x^2(t-\tau) d\tau$$

— Correlation a measure of similarity or coherence between a given signal and a replica of the same signal or other signal by a variable amount.

— Autocorrelation function of a stationary process $x(t)$ maybe defined as:

$$R_x(z) = E[X(t)\,X(t-\tau)]$$

Q.1. (c) With the help of PSD explain which one is more spectral efficient-BPSK or MSK. **(4)**

Ans. PSD of BPSK is given as below:

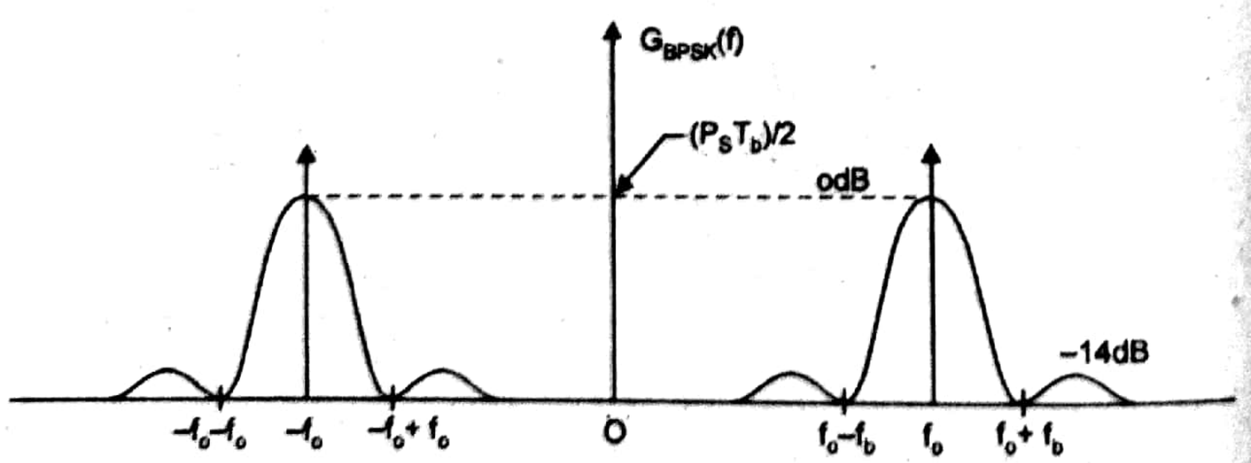

Here total separation between the spectrum component is found to be $2f_0$ in MSK

$$G_p(f) = 2E_b\left(\frac{\sin 2\pi f/f_b}{2\pi f/f_b}\right)^2$$

which proves that spectrally MSK is more efficient.

Q.1. (d) Show how a transversal filter can be used to realize PCM. **(3)**

Ans. Single PCM basically generates code streams in accordance with the input information.

Transversal filters are band limiting filters and can be used as switching device to generates the codes for PCM.

This comprises a first encoder for conversion of PCM signal into difference pulse code modulated signal (DPC) with constant word length, and second encoder for converting them into variable length, of coded words.

Q.1. (e) What is the need of non-uniform quantization and how can it be achieved. **(3)**

Ans. In uniform quantization, the quantizer has a linear characteristics. The step size also remains same throughout the range of quantizer. Therefore, over the complete range of inputs, the maximum quantization error also remains same.

Maximum quantization error $= \varepsilon_{max} = \left|\frac{\Delta}{2}\right|$

Also, step size 'A' is expressed as,

$$\Delta = \frac{2x_{max}}{q}$$

If $x(t)$ is normalized, its maximum value *i.e.*, $x_{max} = 1$.

Therefore, we have, $\Delta = \frac{2}{q}$

Let us consider an example of PCM system in which we take $v = 4$ bits. Then number of levels q will be,

$$q = 2^4 = 16 \text{ levels.}$$

Thus, using equation the step size A will be,

$$\Delta = \frac{2}{q} = \frac{2}{16} = \frac{1}{8}$$

Hence, quantization error is given from equation as,

$$\varepsilon_{max} = \left|\frac{\Delta}{2}\right| = \left|\frac{1}{2\times 8}\right| = \frac{1}{16}$$

Hence, not that here the quantization error is $\frac{1}{16}$ th part of the full voltage range.

For simplicity, we assume that full range voltage is 16 volts. Then maximum quantization error of 1 volt is quite high *i.e.*, about 30 to 50%. This means that for signal amplitudes which are close to 15 volts etc, the maximum quantization error (which is same throughout the range) of 1 volt can be considered to be small. In fact, this problem arises because of uniform quantization. Therefore non-uniform quantization should be used in such cases.

In other words, we can say that it is desirable that SNR should remain essentially constant over a wide range of input power levels. A quantizer that satisfies all these requirements is known as a Robust Quantizer. Infact, such a robust performance can be obtained by using a nonuniform quantization-

Q.1. (*f*) Explain the significance of eye pattern. **(3)**

Ans. Significance of the eye pattern are:

1. The width of the eye opening defines the time interval over which the receiver wave can be sampled, without an error due to ISI.

2. The sensitivity of the system to the timing error is determined by the rate of closure of the eye as the sampling rate is varied.

3. The height of eye opening at a specified sampling time defines the margin over noise.

4. When effect of ISI is severe, eye is completely closed and it is impossible to avoid errors due to combined presence of ISI and noise in the system.

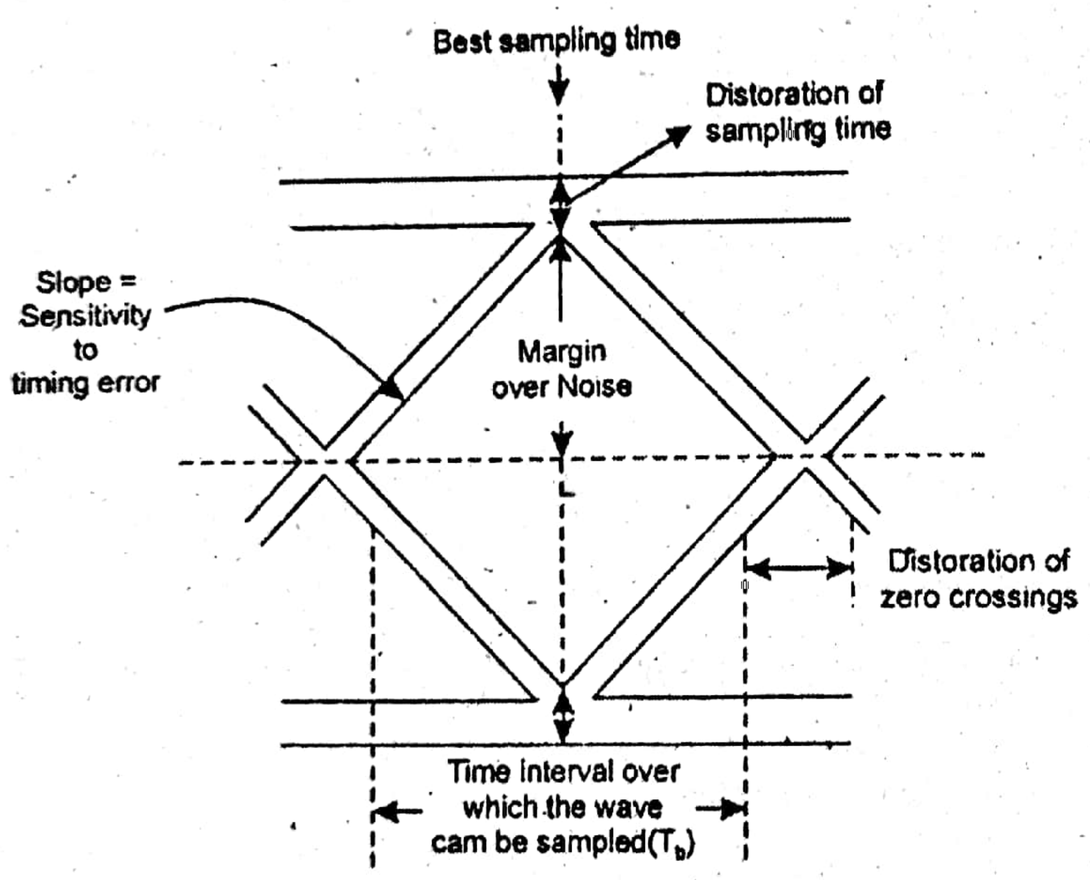

Q.1. (*g*) What is Random Ergodic process? Explain with an example. **(3)**

Ans. Random Ergodic Process: A random process is the one which is having the outcomes in very much probabilistic sense.

A random process is said to be ergodic when the time average of this becomes equal to the ensemble average.

Let $x(t)$ be any random process then

$$\hat{x}(t) = \text{ensemble average}$$

and let $\bar{x}(t)$ = time average

$$= \frac{1}{T}\int_{-T/2}^{T/2} x(t)dt$$

then if $\hat{x}(t) = \bar{x}(t)$ then the given process is Ergodic process:

Q.1. (*h*) What are the techniques used to reduce ISI? **(3)**

Ans. Remedies to Remove ISI.

1. Instead of rectangular pulse, if we transmit a sinc pulse then ISI can be decreased to 0. It is called as Nyquist pulse shaping.

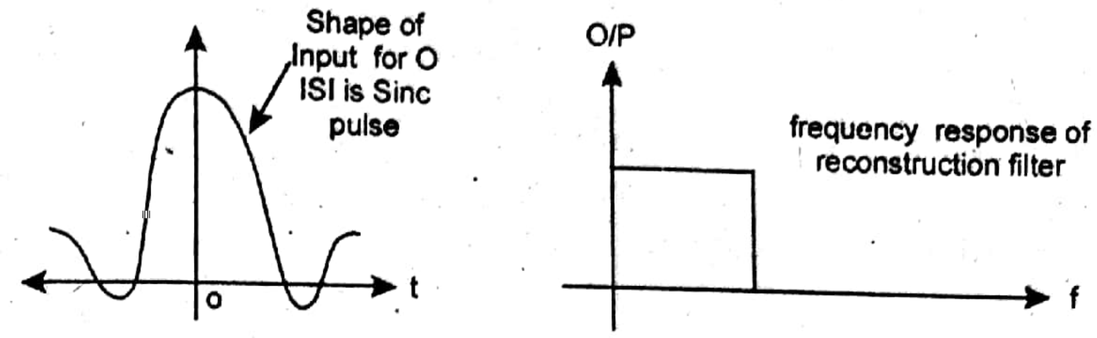

2. To preserve all frequency components, the frequency response of the filter must be expactly flat in pass band.

Q.2. (*a*) Explain the process of generation of DPCM signal with block diagram Show relevant wave forms. **(6.5)**

Ans. Working Principle: In fact the differential pulse code modulation works on the principle of prediction. The value of the present sample is predicted from the past samples. The prediction may not be exact but it is very close to the actual sample value. Figure given below shows the transmitter of Differential Pulse Code Modulation (DPCM) system. The sampled signal is denoted $x(nT_s)$ and the predicted signal is denoted by $\hat{x}(nT_s)$. The comparator finds out the difference between the actual sample value $x(nT_s)$ and predicted sample value $\hat{x}(nT_s)$. This is known as Prediction error and it is denoted by $e(nT_s)$. It can be defined as,

$$e(nT_s) = x(nT_s) - \hat{x}(nT_s) \quad ...(i)$$

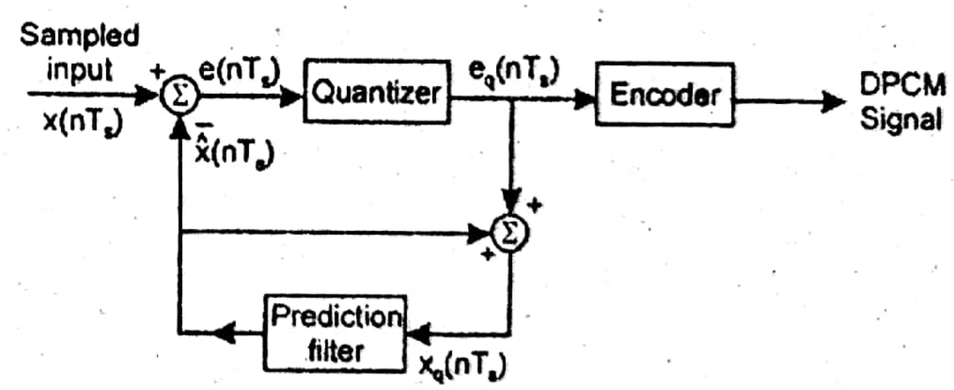

Thus, error is the difference between unquantized input sample $x(nT_s)$ and prediction of it $x(nT_s)$. The predicted value is produced by using a prediction filter. The quantizer output signal gap $e_q(nT_s)$ and previous prediction is added and given as input to the prediction filter. This signal is *called* $x_q(nT_s)$. This makes the prediction more and more close to the actual sampled signal. We can observe that the quantized error signal $e(nT_s)$ is very small and can be encoded by using small number of bits. Thus number of bits per sample are reduced in DPCM.

The quantizer output can be written as,

$$e_q(nT_s) = {}_e(nT_s) + q(nT_s)$$

Here, $q(nT_s)$ is the quantization error. As shown in figure, the prediction filter input $x_q(nT_s)$ is obtained by sum $\hat{x}(nT_s)$ and quantizer output *i.e.*

$$x_q(nT_s) = \hat{x}(nT_s) + e_q(nT_s)$$

Substituting the value of eq(nTs) in the above equation, we get,

$$x_q(nT_s) = \hat{x}(nT_s) - \hat{x}(nT_s) + q(nT_s)$$

$$e(nT_s) = x(nT_s) - \hat{x}(nT_s)$$

$$\therefore \quad e(nT_s)\,\hat{x}(nT_s) = x(nT_s)$$

Therefore, the value of $e(nT_s) + \hat{x}(nT_s)$ we get,

$$x_q(nT_s) = x(nT_s) + q(nT_s)$$

(*ii*) Redundant information in PCM.

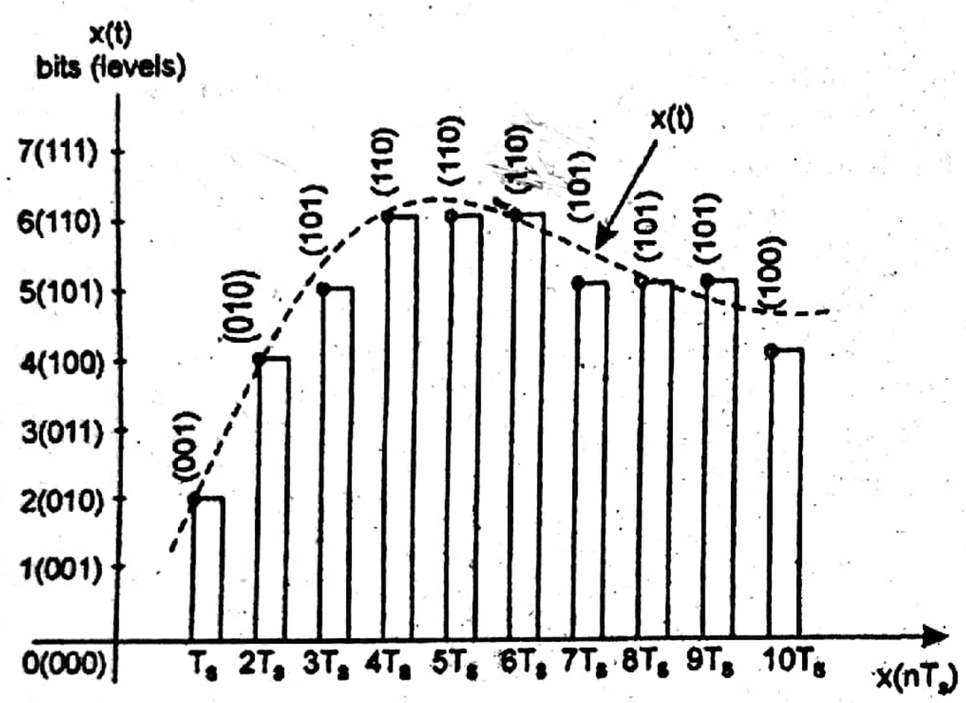

Figure given above shows a continuous time signal $x(t)$ by dotted line. This signal is sampled by flat top sampling at intervals T_s, $2T_s$, $3T_s$... nT_s. The sampling frequency is selected to be higher than nyquist rate. The samples are encoded by using 3 bit (7 levels) PCM. The sample is quantized to the nearest digital level as shown by small circles in the figure. The encoded binary value of each sample is written on the top of the samples. We can observe from figure that the samples taken at $4T_s$, $5T_s$ are encoded to same value of (110). This information can be carried only by one sample. But three samples are carrying the same information means that it is redundant. We consider another example of samples taken at $9T_s$ and $10T_s$. The difference between these samples only due to last bit and first two bits are redundant, since they do not change.

If this redundancy is reduced, then overall bit rate will decrease and number of bits required to transmit one sample will also be reduced. This type of digital pulse modulation scheme is known as Differential Pulse Code Modulation (DPCM).

Q.2. (*b*) Show that in PCM, the Signal to Quantization Noise Ratio (SNR) is 4.8 + 6*n*. **(6)**

Ans. In a PCM system for linear quantiztion the signal to quantization noise ratio is given as,

$$\frac{S}{N} = \frac{\text{Normalized signal power}}{\text{Normalized noise power}}$$

But, normalized noise power has been calculated as $\frac{\Delta^2}{12}$

Therefore,
$$\frac{S}{N} = \frac{\text{Normalized signal power}}{(\Delta^2/12)}$$

We know that number of bits 'v' and quantization levels are related as,

$$q = 2^v$$

Let us assume that input $x(nT_s)$ to a linear quantizer has continous amplitude in the range $-x_{max}$ to $+x_{max}$. Therefore, toral amplitude range.

Now, the step size will be $= x_{max} - (-x_{max}) = 2x_{max}$

$$\Delta = \frac{2x_{max}}{2^v}$$

Here, substituting the value of q from equation in equation, we get

$$\Delta = \frac{2x_{max}}{2^v}$$

Now substituting this value in equation, we get.

$$\frac{S}{N} = \frac{\text{Normalized signal power}}{\left(\frac{2x_{max}}{2^v}\right)^2 \cdot \frac{1}{2}}$$

Let normalized signal power be denoted as' P'

Then,
$$\frac{S}{N} = \frac{P}{\frac{4x_{max}^2}{2^{2v}} \times \frac{1}{12}} = \frac{3P}{x_{max}^2} \cdot 2^{2v}$$

This is the required relation for signal to quantization noise ratio for linear quantization in a PCM system.

Hence, signal to quantization input $x(t)$ is normalized, *i.e.*

$$\frac{S}{N} = \frac{3P}{x_{max}^2} 2^{2v}$$

This expression shows that signal to noise power ratio of quantizer increases exponentially with increasing bits per sample.

Now, if we assume that input $x(t)$ is normalized, *i.e.*

$$x(t)_{max} = 1$$

Then, signal to quantization noise ratio will be,

$$\frac{S}{N} = 3 \times 2^{2v} \times P$$

Also, if the destination signal power 'P' is normalized , *i.e.*,

$$P \le 1$$

Then the signal to noise ratio will be given as

$$\frac{S}{N} \le 3 \times 2^{2v}$$

Because $x_{max} = 1$ $P \le 1$, the signal to noise ratio given by equation is said to be normalized. Expressing the signal to noise ratio in decibels, we get.

$$\left(\frac{S}{N}\right)dB = 10\log_{10}\left(\frac{S}{N}\right)dB \le 10\log_{10}[3 \times 2^{2v}] \le (4.8 + 6v)dB$$

Thus, signal to quasntization noise ratio for normalized values of power 'P' and amplitude of input $x(t)$, will be

$$\left(\frac{S}{N}\right)dB = (4.8+6v)dB$$

Q.3. (a) What is Gaussian distribution? Why this distribution is used frequently in studying Noise effect in communication? (6)

Ans. This function is most widely used type of function and most of the naturally occuring phenomenon indicate this type of density function, central limit theorem is also an indirect way behind its popularity.

This is also called as normal density function. Mathematically this function can be expressed as

$$f_X(x) = \frac{1}{\sqrt{2\pi\sigma_x^2}}\exp\left(\frac{(x-m_x)^2}{2\sigma_x^2}\right) -\infty < x < \infty$$

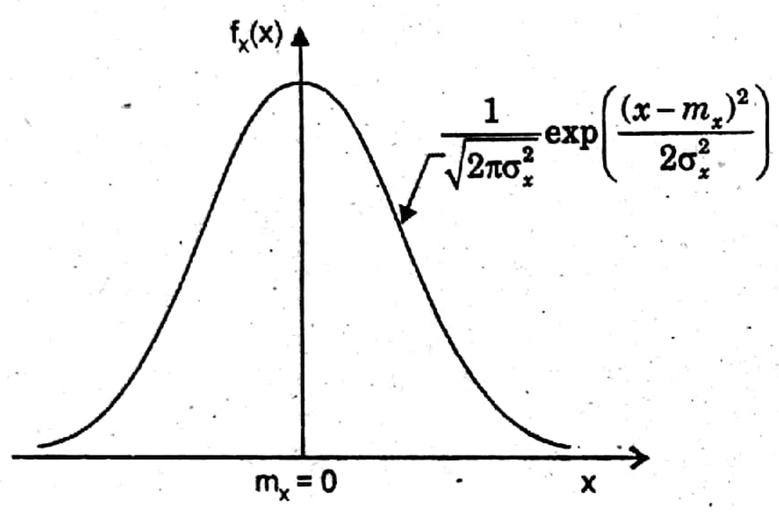

This function is very much useful in determining the probabilities such as

$$P(X>a) = \int_a^\infty \frac{1}{\sqrt{2\pi\sigma_x^2}}\exp\left(-\frac{(x-m_x)^2}{2\sigma_x^2}\right)$$

Gaussian density function is symmetric about the mean value.

This function is also used to model the electrical noise. In communication system the electrical noise is the cummulative effect of large no. of randomly moving charged particles and hence the instantaneous value of noise will have a gaussian distribution.

Q.3. (b) PDF of a Random Variable "X" is given by:

$$f_x(x) = \begin{cases} 0 & x \le a \\ 1/(b-a) & a < x < b \\ 0 & x > a \end{cases} \qquad (6.5)$$

Find its CDF and draw it.

Ans. Given

$$f_x(x) = \begin{cases} 0 & x \le a \\ 1/(b-a) & a < x < b \\ 0 & x > a \end{cases}$$

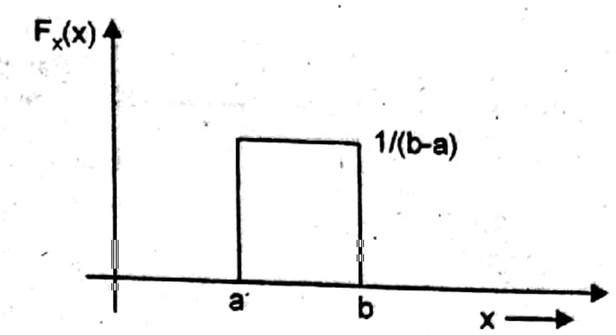

CDF of this type of *PDF* is given by:

$$F_x(x) = \int_{-\infty}^{\infty} f_x(x)\,dx$$

$$= \int_{-\infty}^{a} f_x(x)\,dx + \int_a^b f_x(x)\,dx + \int_b^\infty f_x(x)dx$$

$$= 0 + \int_a^b \frac{1}{(b-a)}dx + 0$$

$$= \frac{1}{(b-a)}[x]_a^b = \frac{(b-a)}{(b-a)} = 1$$

so CDF can be drawn as follow:

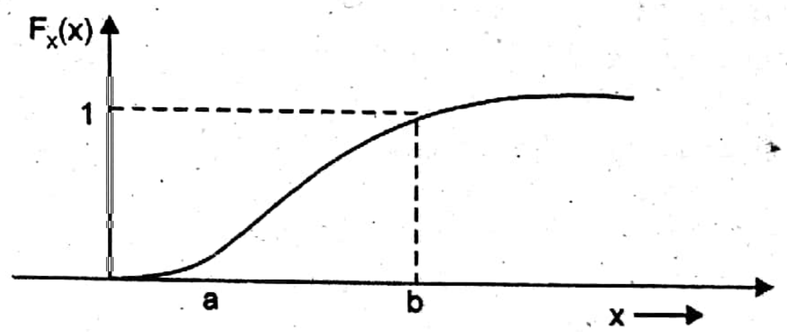

Q.4. (a) How a Correlation Receiver and Matched Filter Receiver are similar in their area of Operations? Use suitable block diagram to explain. (6)

Ans. Correlation Receiver: This type of receiver is an optimal receiver for two waveforms (pulses) provided that they both have equal energy. This can be generalized by two unequal energy ones by compensating for the difference. The output of correlation receiver to each signal can be determined by a matched filter to each different pulse plus the energy compensation.

While the matched filter maximizes the receiver's sample signal to noise ratio (SNR) by matching the receiver filter to the incoming signal shape, but here only one signal is taken for comparison.

Any receiver for binary coded signal may be designed on the basis of the following model.

Effective value of the output to decide the boundary is $V_0(T) = \dfrac{S_1(T)+S_2(T)}{2}$

Error will be made if

$$n_0(T) \ge \frac{S_1(T)-S_2(T)}{2}$$

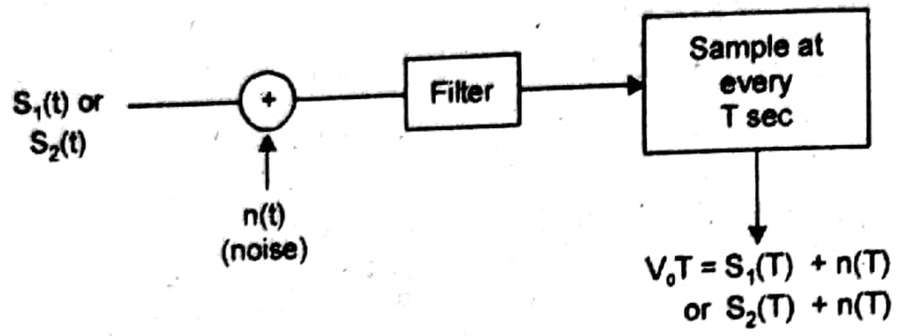

Hence the probability of error is.

$$P_e = \int_{\frac{S_1(T)-S_2(T)}{2}}^{\infty} \frac{e^{-n_0^2(T)/2\sigma_0^2}}{\sqrt{2\pi\sigma_0^2}} dn_0(T)$$

Now if $x = n_0(T)/\sqrt{2}\,\sigma_0$ then the above mentioned equation may be written as

$$P_e = \frac{1}{2}\frac{2}{\sqrt{\pi}} \int_{\frac{s_1(T)-s_2(T)}{2\sqrt{2}\,\sigma_0}}^{\infty} e^{-x^2} dx = \frac{1}{2} erfc\left[\frac{s_1(T)-s_2(T)}{2\sqrt{2}\,\sigma_0}\right]$$

Here $$s_1(T) = \frac{VT}{\tau} \Delta\, s_2(T) = -\frac{VT}{\tau}$$

for the case of integrate and dump filter.

This complimentary error function (erfc (x)) is a monotionically decreasing function of its argument X.

P_e mainly depends on the p difference of $s_1(T)$ and $s_2(T)$. i.e. decreases as $[s_1(T) - s_2(T)]$ becomes larger and rms value of noise voltage σ_0 becomes smaller. Hence the optimum filter is the filter which maximizes the ratio:

$$r = \frac{s_1(T)-s_2(T)}{\sigma_0}$$

In fact the maximization is done of r^2 rather than r.

Q.4. (b) Explain Granular Noise and Slope Overload Noise. How can it be overcome? (6.5)

Ans. There are two major problems of delta modular:

(a) Slope overload distortion.

(b) Granular noise problem.

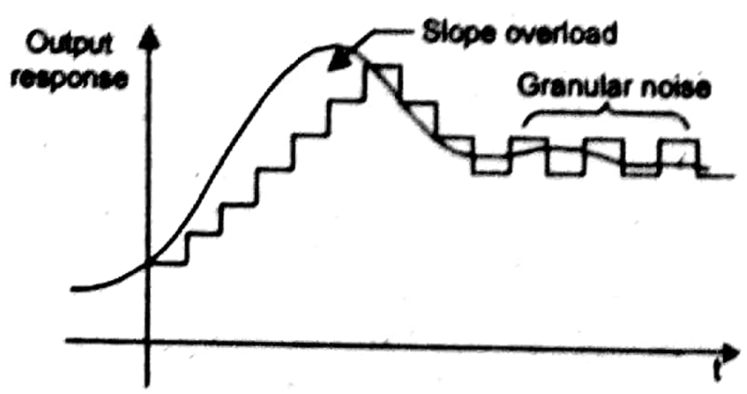

As shown in the figure, when the input signal suddenly rises then the given staircase waveform lags behind the message and there is a wide mis-match of the output bits and the input signal.

$$\text{Slope of input signal} = \frac{d}{dt}(m(t))$$

Let $$m(t) = A_m \cos w_m t$$

then $$\text{slope} = \frac{d}{dt}(A_m \cos w_m t)$$

$$= -A_m \sin w_m t \,.\, w_m$$

$$= -A_m w_m \sin w_m t$$

$$\text{magnitude of this slope} = A_m w_m$$

$$\text{Slope of Staircase waveform} = \frac{\Delta}{T_s}$$

Then slope overload occurs if

$$A_m w_m > \frac{\Delta}{T_s}$$

or $$A_m > \frac{\Delta}{T_s w_m}$$

Hence it can be avoided if $A_m \le \frac{\Delta}{T_s w_m}$

The granular noise occurs because of slow variation of input signal or when the variation lies in the upper and lower boundary of the pulse train.

This type of problem can be avoided if step size of the pulse is reduced in the range of the signal.

Q.5. (a) Distinguish between Coherent and Non-coherent demodulations. (6)

Ans. Coherent Demodulation: This type of demodulation is very much synchronized with the clock of transmission. For example the binary phase shift keying BSPK signal is demodulated using the following receiver structure.

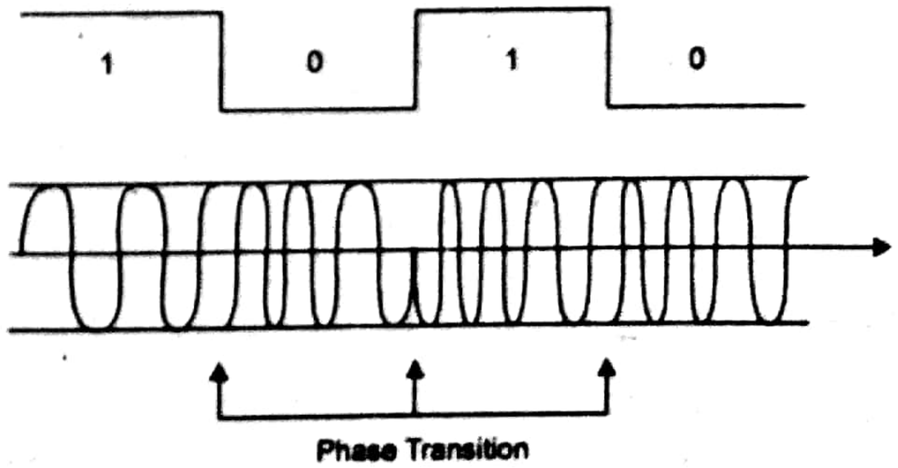

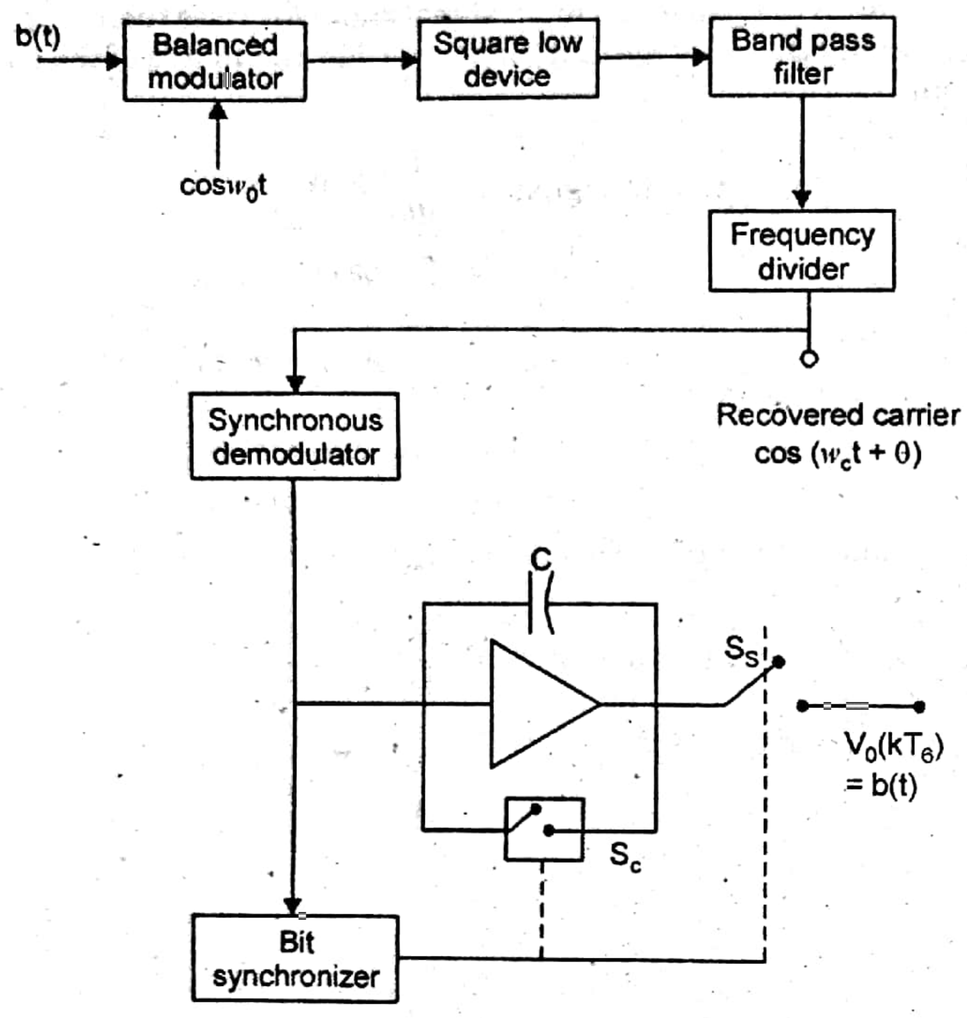

Balanced modulator generates $b(t)\sqrt{2P_s}\ \cos w_0 t$ then the square law device produces $\cos^2(w_0 t + \theta)$ which will multiply the frequency by 2, so that cos 2 $(w_0 t + \theta)$ signal is produced.

Non-coherent demodulation utilizes the principle of local mixing and filtering. For example, detection of BFSK signal is done by the following circuit. In which a particular deviation of frequency is sensed by its respective filter bank.

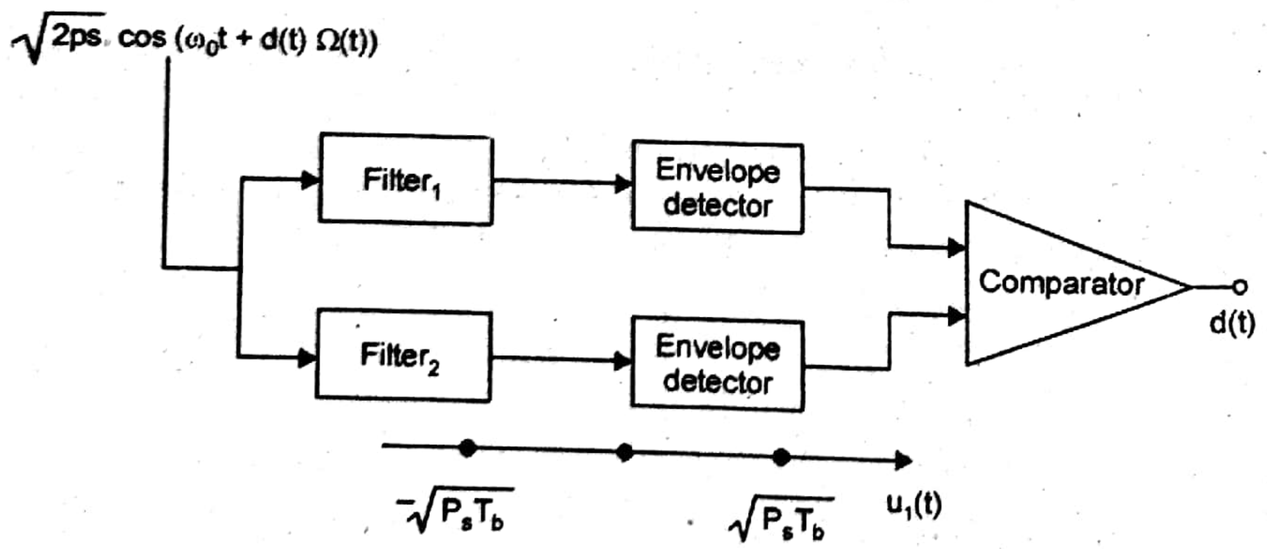

Filter 1 is characterised by $\quad f_H = f_0 + \dfrac{\Omega}{2\pi}$

$$= f_o + f_b$$

and Filter is characterised by $\quad f_L = f_o - \dfrac{\Omega}{2\pi} - f_b$

Here both the filters are having a bandwidth of $2 f_b$.

Comparator makes decision either in the favour of '1' or '0'.

Q.5. (*b*) Why do BPSK and QPSK manifest the same bit-error-probability relationship? (6.5)

Ans. Signal space representation of BPSK can be plotted as follow:

This gives a geometric representation of BPSK signals.

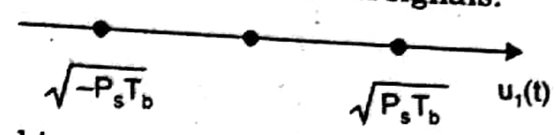

Where the BPSK signal is represented by

$$V_{BPSK}(t) = \sqrt{P_s T_b}\, b(t) \sqrt{\frac{2}{T_b}} \cos w_0 t$$

$$= \sqrt{P_s T_b}\, b(t) u_1(t)$$

Now the distance between the two signals is

$$d = 2\sqrt{P_s T_b} = 2\sqrt{E_b} \qquad ...(1)$$

Where $E_b = P_s T_b$ is the energy contained in the bit duration.

While in *QPSK* the signal space diagram is given as follow:

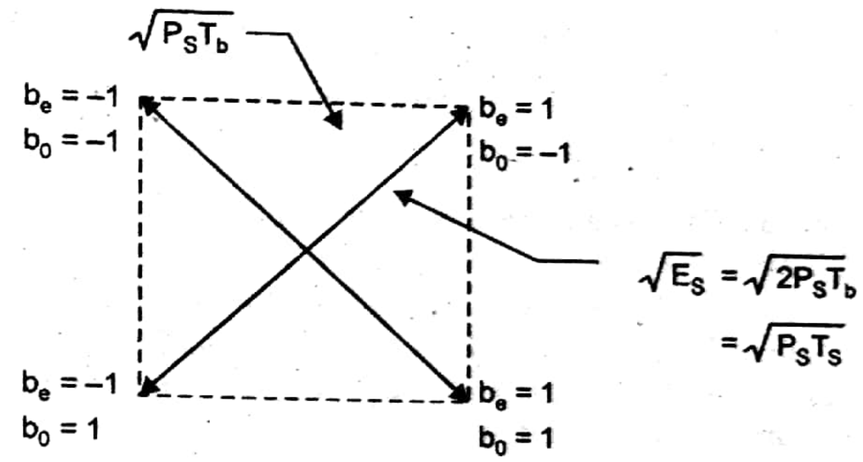

Where

$$b_e = \sqrt{2} \cos (2m+1)\pi/4$$

$$b_0 = -\sqrt{2} \sin (2m+1)\pi/4$$

then

$$V_m(t) = \sqrt{E_b}\, b_e(t) u_1(t) - \sqrt{E_b}\, b_0(t) u_2(t)$$

from the diagram it is very much clear that

$$d = 2\sqrt{P_s T_b} = 2\sqrt{E_b} \qquad ...(2)$$

From equation (1) and (2) it is clear that Euclidean distance for BPSK and QPSK is same.

So bit error probability (P_e) for both of these systems will found to be the same.

Q.6. (*a*) Show that the penalty for using differential decoding in DPSK modem is about 3 dB. (8)

Ans. While using the differential decoding in the DPSK encoder there is a penalty of *dB* loss while receiving the signal.

This can be justified by the following reasons:

1. When transition is made between one interval to the next, it is not possible for $V_D(k)$ to change from + 2V to – 2V or vice-versa. In short in any interval $V_D(k)$ can not always assume any of the possible levels independently of its level in the previous level.

2. The inverter used in the decoding uses the logic 1 for +ve 1 volt or greater and 0 for 0 volt.

Output of the inverter is characterised by:

$$I_1 = b(k) = d(k) \oplus b(k-1)$$

where

$$I_2 = b(k-1) \text{ as then input}$$

then output $\hat{d}(k)$ is:

$$\hat{d}(k) = I_1 \oplus I_2$$

$$= d(k) \oplus b(k-1) \oplus b(k-1) = d(k)$$

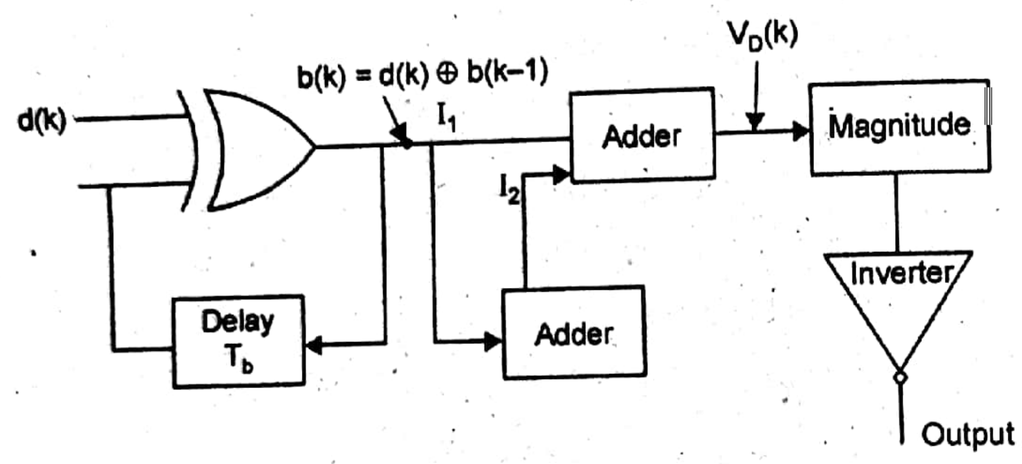

Q.6. (b) With constellation diagram show how FSK offers best noise immunity compared to ASK and PSK. **(4.5)**

Ans. FSK offers better noise immunity as compared to ASK and PSK. It is on the basis of the fact that the value of Euclidean distance is maximum in case of FSK as compared to that of ASK and PSK. Euclidean distance value is minimum in case of ASK so it is having the worst noise performance.

1. ASK

$$S_0(t) = 0$$

$$S_1(t) = \sqrt{2P_s}\cos w_0 t$$

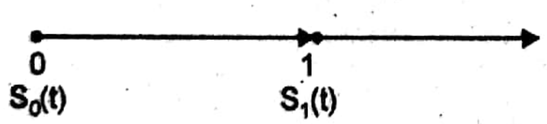

2. PSK:

$$S_0(t) = \sqrt{2P_s}\cos w_0 t$$

$$S_1(t) = \sqrt{2P_s}\cos(w_0 t + \pi)$$

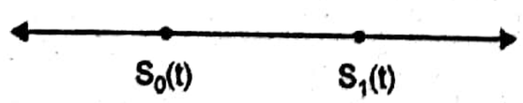

3. And for *FSK*

$$S_0(t) = \sqrt{2P_s}\cos[(w_0 - \Delta w)t]$$

$$S_1(t) = \sqrt{2P_s}\cos[(w_0 + \Delta w)t]$$

Then then signal space diagram is as follows:

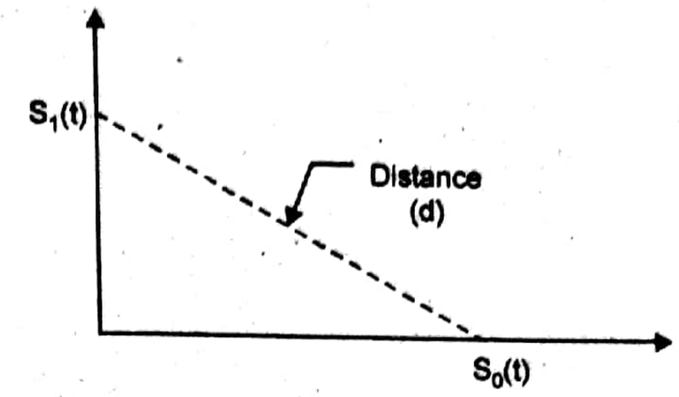

Because the value of distance (d) is found to be maximum in class of FSK so it is having best noise immunity.

Q.7. Explain the following:

Q .7. **(a) Differential Manchester encoding.** **(6.5)**

Ans. Differential Manchester Encoding in this type of encoding, the data takes the following wave pattern as shown below:

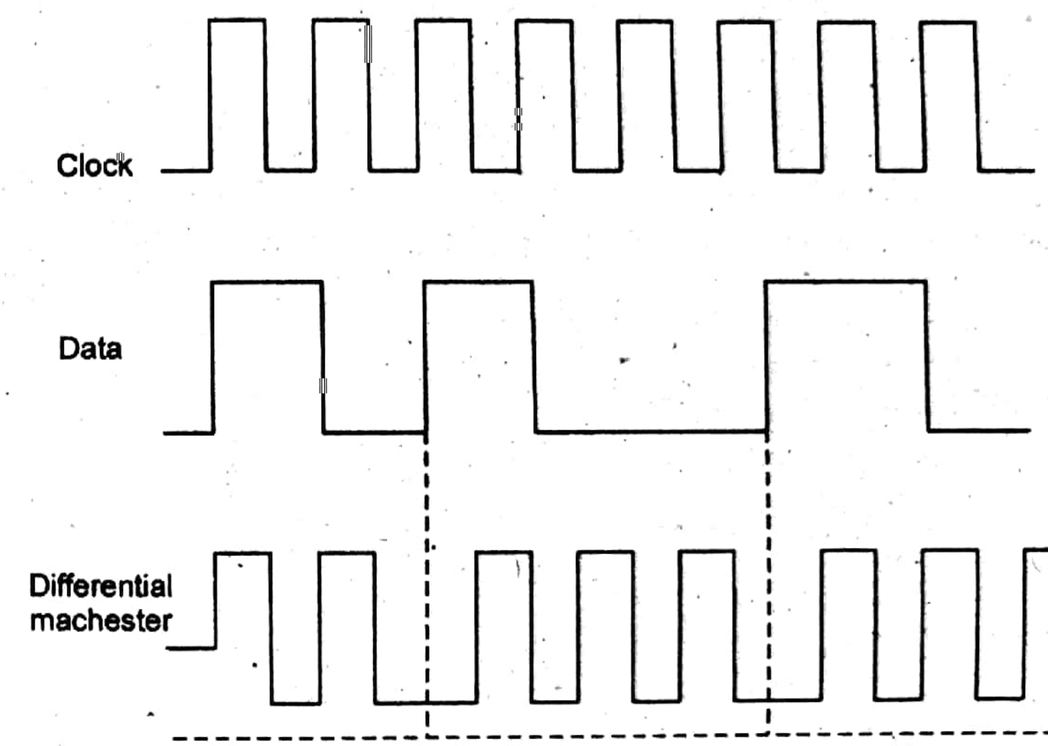

Here data and clock are combined to form a single 2-level self synchronizing data stream. It is a differential encoding using the presence or absence of transitions to indicate logical values.

It is not necessary to know the polarity of the sent signal since the information is not kept in actual values of the voltage but in their change, or it is detected whether the polarity is same or different from the previous value, this makes synchronization easier.

It is having following Advantage on the other type of line coding:

(*a*) A transition is guranteed at least once every bit, allowing the receiving device to perform clock recovery.

(*b*) Detecting the transitions is often less error prone than comparing against a threshold in noisy environment.

Q.7. (b) Binomial and Poission distribution. **(6)**

Ans. (i) Binomial Distribution: Let in an experiment the outcome can have two possible values and let for an event A, the probability of outcome be P. Then the

probability that the event A occurs k times is given by the binomial probability mass function defined as

$$P(X=k) = \binom{n}{k} P^k (1-P)^{n-k}$$

$$\binom{n}{k} = \frac{n!}{k!(n-k)!}; n! = n(n-1)\ldots(n-2)(3)(2)(1)$$

Mean value of the binomial random variable are given by:

$$m_x = n_p$$
$$\sigma_x^2 = np(1-p)$$

(*ii*) Poisson Distribution: Poisson model describes another integer valued Random variable associated with the repeated trials.

Poisson random variable corresponds to the number of times an event occurs in an interval ΔT it is given by $P\Delta T$ that is small

then the resulting poisson frequency function is

$$P_I(i) = \frac{e^{-\mu T}(\mu T)^i}{i!}$$

where μT is mean value.

These expressions describe the random phenomena such as radio active decay and shot noise in electronic devices, which relate to the time distribution of event (e.g. an atom decaying in a sample or an electron being emitted from a cathode poisson model also approximate the binomial distribution for the case n is very large and Probability (α) is small and the product $n\ \alpha$ is finite.

In such case let $\mu t = m$ then

Poisson's approximation is

$$P_I(i) \approx e^{-m}\frac{m^i}{i!}$$

FIRST TERM EXAMINATION [SEPT. 2016]
FIFTH SEMESTER [B.TECH]
DIGITAL COMMUNICATION [ETEC–303]

Time : 1:30 hrs.

M.M. : 30

Note: *Questions One is complusory. Attempt any two more questions from the rest of the Questions..*

Q.1. (*a*) Explain the terms **(2×5=10)**

(*i*) Probability (*ii*) Random Process

Ans. (*i*) Probability: It is a concept to indicate the chance for occurance of certain event say 'A'.

The Probability for event 'A' is defined as

$$P(A) = \underset{N \to \infty}{lt} \frac{n_A}{N}$$

where n_A : No of events in favour of A

N : Total No. of such events.

(*ii*) Random Process: It is the outcomes shown by a continuous random variable to indicate the response of a system in probabilistic manner.

Random process may be of stationary or Non-stationary type.

Q.1. (*b*) Discuss the variance and standard deviation of random variables.

Ans. (*b*) Variance of a random variable is denoted by σ^2 and it shows how much power variation is there from the mean value

$$\sigma^2 = X^2 - m^2_X$$

Means variance is the difference of square of mean and the mean of squared value. Standard Deviation indicate the variation of random variable from the mean value and is indicated by 'σ' or we can get the value of 'σ' by taking square root of σ^2.

Q.1. (*c*) What is probability of error.

Ans. Probability of error is simply denoted by p_e and gives the performance of any system when bit transmission is considered which is called the bit error rate (BER) performance.

Probability of error also depend on the error function $Q(x)$ and depends on the factors such as bit energy, bit duration etc. For example for ASK system, P_e is written as

$$P_e = Q\left(\sqrt{\frac{A^2 T_b}{4\eta}}\right)$$

Q.1. (*d*) Discuss the Gaussian process.

Ans. (*d*) Most of the naturally occurring process in our day to day life are of Gaussian nature. These processes are having a common feature in which the random variable considered is having Gaussian PDF.

Let $f_X(x)$ be the PDF of the PDF of the given variable (x)

It is a bell-shaped function and can be described mathematically as:

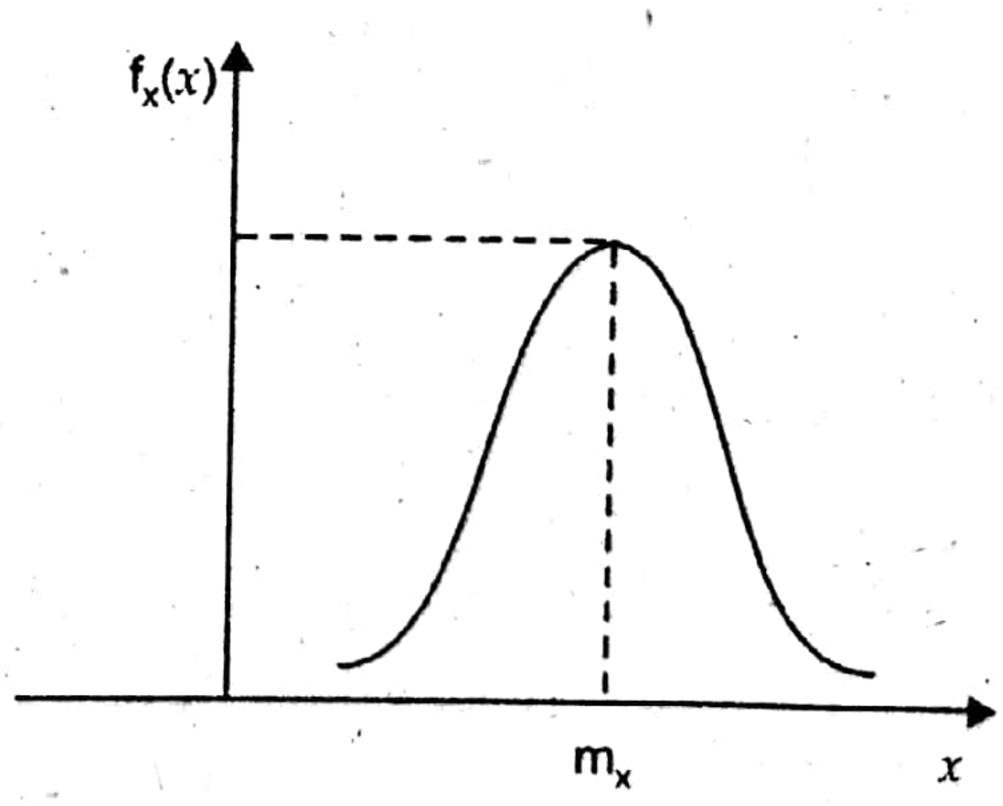

$$f_X(x) = \frac{1}{\sqrt{2\pi\sigma^2}} e^{-(x-m_X)^2/2\sigma^2}$$

$$-\infty < x < \infty$$

Q.1. (*e*) What is scrambling.

Ans. In tele communication a scrambler is a device that transposes or inverts signal or otherwise encodes a message at the sender's side to make the message unintelligible at the receiver not equipped with an appropriately set descrambling device.

Major difference between scrambling and encryption is that scrambling is done in analog domain, whereas encryption is done in digital domain.

Examples of the scrambling include, removing or changing vertical or horizontal sync pulses in television signals

Q.2. (*a*) Draw the different line Code Waveforms for the data '00110110'. (10)

(*i*) NRZ bipolar code

(*ii*) RZ unipolar

(*iii*) AMI

(*iv*) Manchester coding.

(*v*) Differential Manchester coding.

Ans. Given data is '00 110 11 0'

(*i*) NRZ 0 0 1 1 0 1 1 0

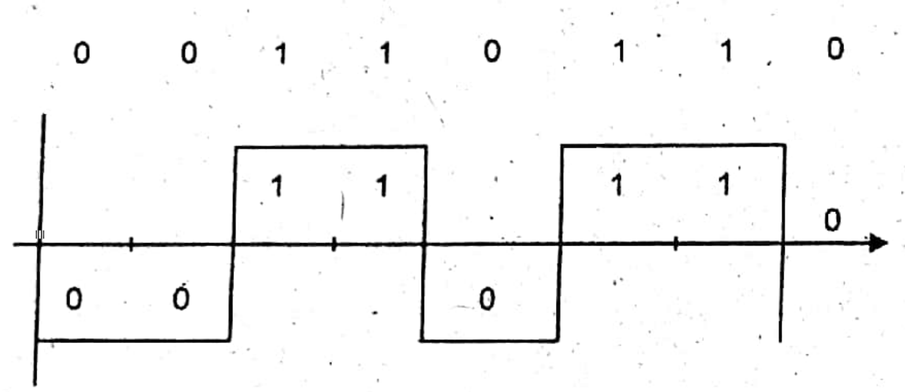

(*ii*) RZ Unipolor:

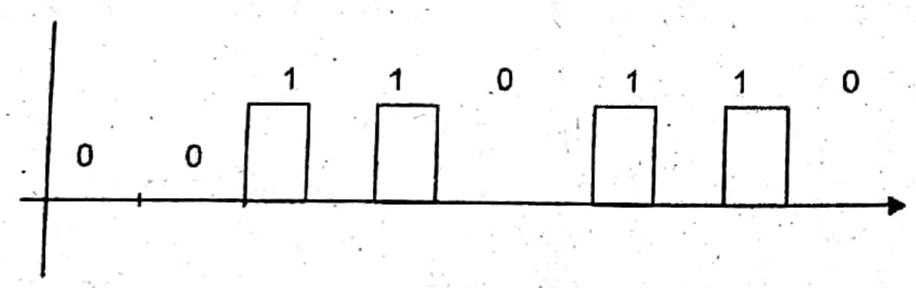

(*iii*) AMI

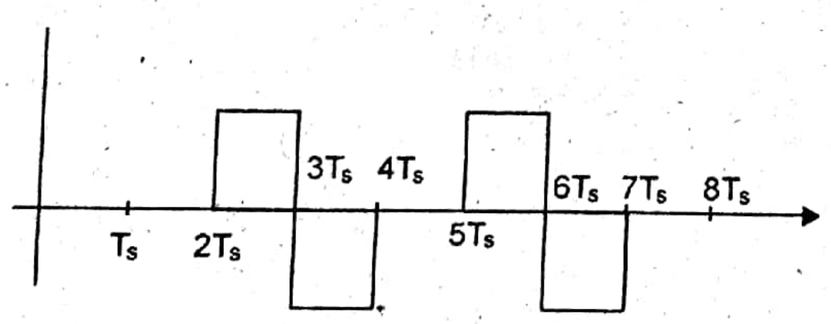

(*iv*) Manchester Encoding Scheme:

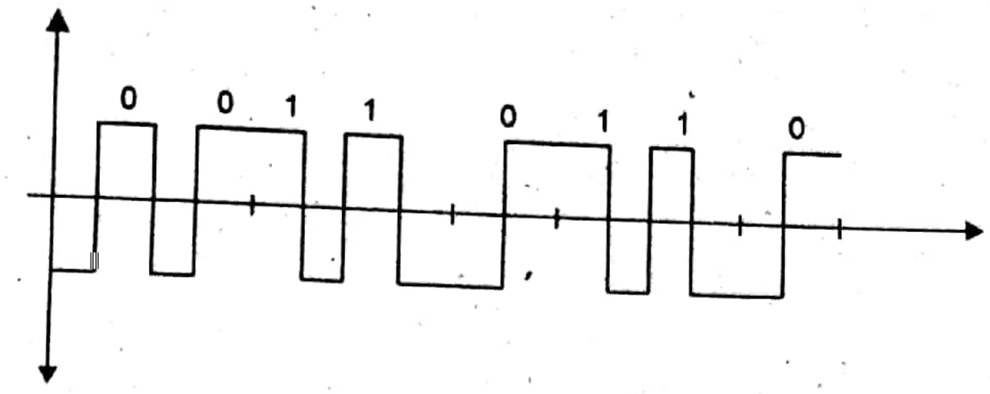

(*v*) Differential Manchester coding.

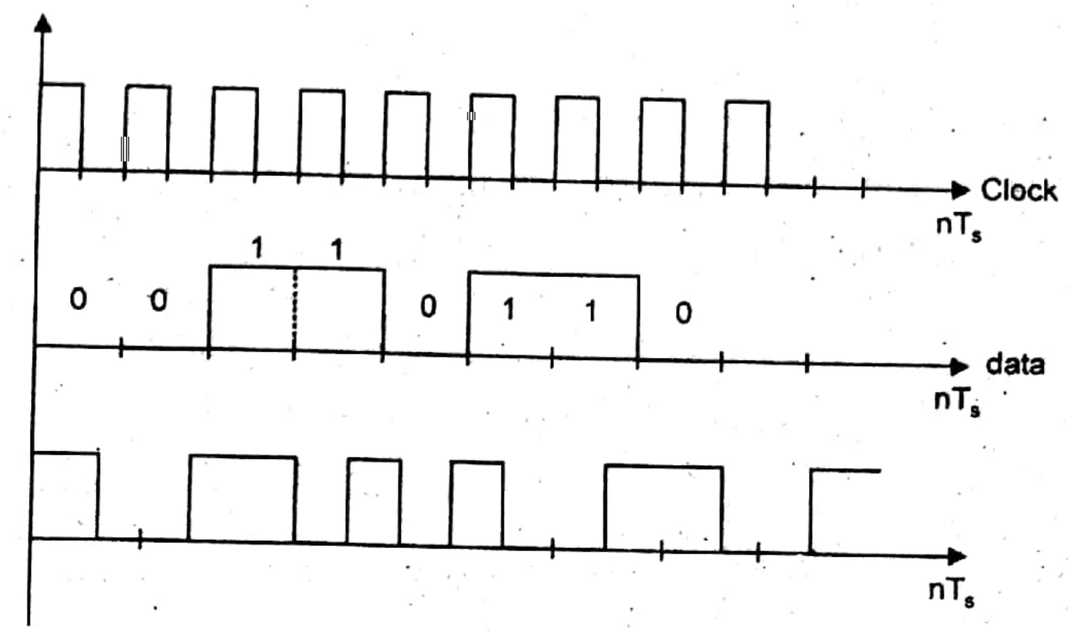

Differential Manchester encoding

OR

Q.2. (*b*) Explain the PDF and CDF and derive the relationship between CDF and PDF. (5+5=10)

Ans. PDF: PDF stands for probability density function. It defines the variation of any continuous random variable. PDF of any random variable indicates how much information it is containing in which region.

It also indicate the probability of defined values, if PDF of any random variable comes out be flat. It means the out comes of the given random variable are equiprobable. Some examples are as follow:

(1) Gaussian PDF

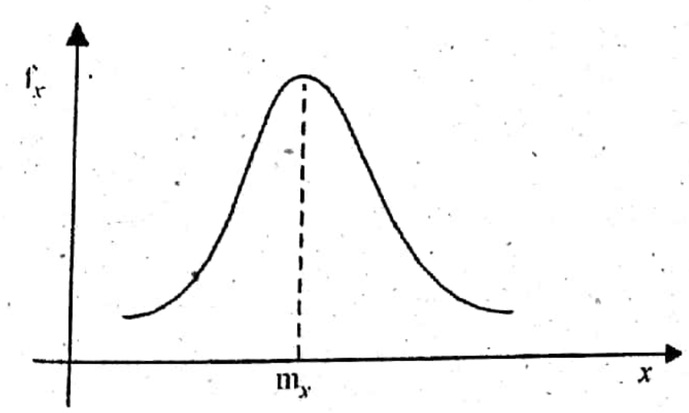

(2) Constant PDF

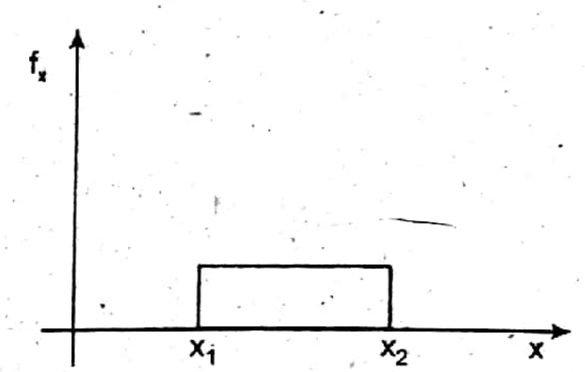

(3).Rayleigh PDF

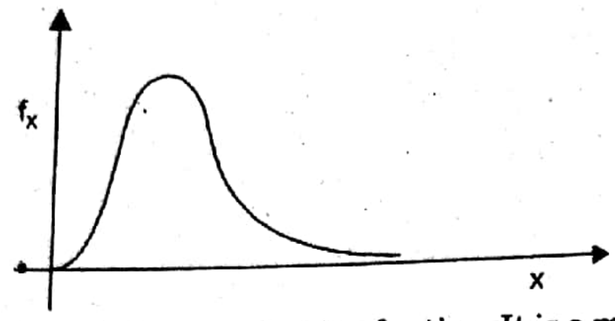

CDF: It stands for Cumulative distribution funtion. It is a monotonically increasing function.

Value of the CDF gives, the total probability of any event upto a certain value. For example

$$F_X(5) = P(x \leq 5)$$

This relation gives all those options for which the probability of the given random variable will be less than or upto 5.

CDF is given by F_X and above figure shows that it is always an increasing function PDF (f_x) and CDF (F_x) are related to each other by the following relation:

$$f_X(x) = \int_{-\infty}^{x} F_X(x)dx$$

Q.3. (*a*) Discuss in detail modulation and demodulation in adaptive data modulation. (5)

Ans. Adaptive delta modulation removes the problems found in the normal delta modulation.

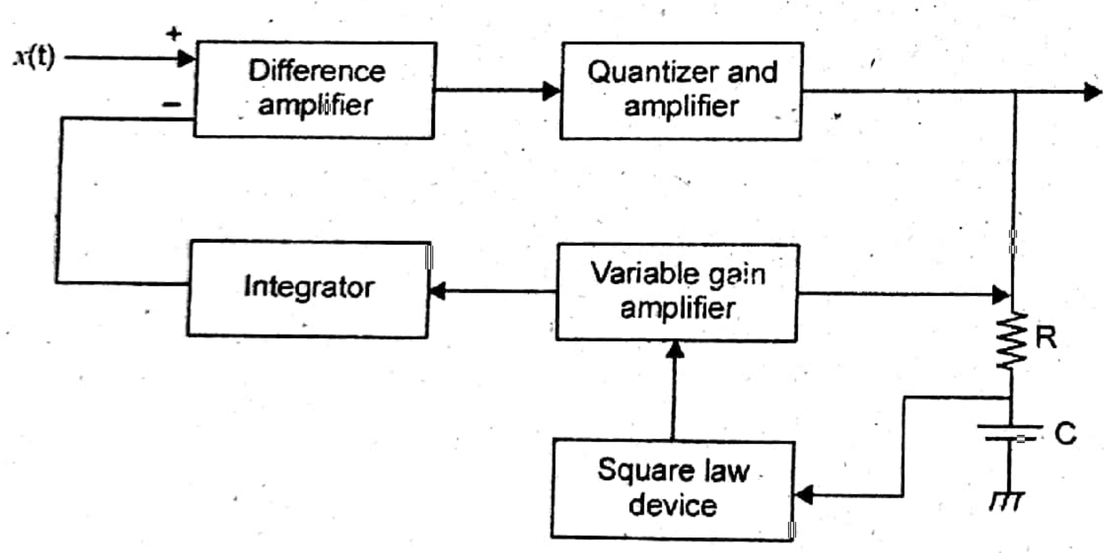

In this type of modulation the mechanism is such that it changes the slope of stair case ramp signal according to the slope of input message signal.

Working of adaptive delta modulation is depicted in the block diagram as given above.

The variable gain amplifier helps to change the amplitude of the stair case ramp signal.

Demodulation is easily achieved by the following circuit:

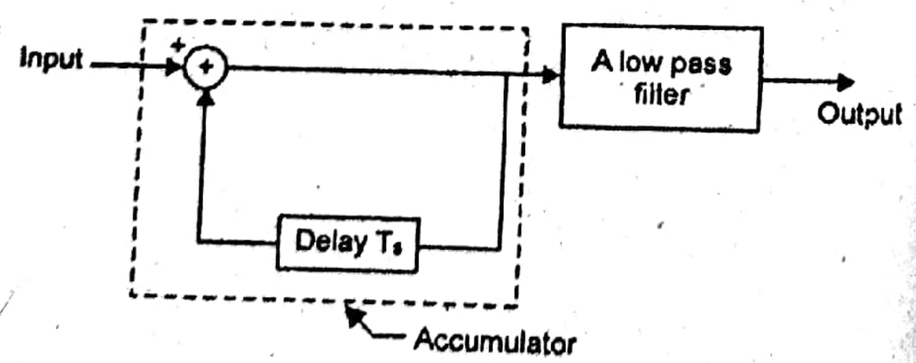

A delay of T_s is given by the circuit to make a synchronisation with that of transmitter. Low pass filter makes the changes smooth which matches with the original signal.

Q.3. (*b*) A signal having bandwidth equal to 4 kHz is sampled, quantized and coded by a PCM system. The coded signal is then transmitted over a transmission channel of supporting a transmission rate of 100 K bits/sec. Determine the maximum signal to noise ratio that can be obtained by this system. The input signal has peak to peak value of 6 volts and rms value of 0.4 V. (5)

Ans. Bandwidth of the signal= 4KHz

Channel transmission rate = 100 k bits/sec.

Signal peak value m_p = 6 volt

r.m. s value = 0.4 volt

Transmission rate is given by $nf_s = n2f_m$

$= 2 \times n \times 4000 = n \times 8000$

But $n \times 8000 = 100 \times 10^3$ bits/sec.

$$\Rightarrow \quad n = \frac{100}{8} = 12.5 \text{ bits/sec}$$

or n = 13 bits per sample

but $L \leq 2^n$

or $L = 8 \times 1024$

$$\Delta = \frac{2A}{L} = \frac{6}{8 \times 1024}$$

Hence Noise power is given as

$$\frac{\Delta^2}{12} = \frac{6 \times 6}{(8 \times 1024)^2} \times \frac{1}{12}$$

$$= \frac{(7.32)^2 \times 10^{-8}}{12} = 4.5 \times 10^{-8}$$

Signal Power is given by

$$\overline{m^2(t)} = 3 \times 3 = 9 \text{ watt}$$

$$10 \log_{10}(S/N) = 10 \log_{10}\left(\frac{9}{4.5} \times 10^8\right)$$

$$= 10 \log_{10}(2 \times 10^8)$$

$$= 10 \log_{10}(2 + 80) \text{ dB.}$$

Q.4. (*a*) Discuss the Binomial Distribution and derive expresssion for PDF and CDF of Binomial Distribution. (5)

Ans. Binomal distribution functions are used when the events under observation are of binary nature. Here the Bernaulli trial is done to find the possible outcome.

Let probobility of correct result = q

Then probability of wrong result = $1 - q$

Then out of the n trials, the probability of 'k' events to be correct is

$$P_X(k) = n_{c_k} q^k (1-q)^{n-k}$$

$$= \frac{n!}{(n-k)!k!} q^k (1-q)^{n-k}$$

This value defined the variation of PDF of binomial distribution. CDF is obtained by taking integration on both the sides under the following constraints.

$$F_X(x) = \int_{-\infty}^{x} P_X(k)dx$$

Q.4. (*b*) Discuss the physical significance of PSD and its different properties. Also explain Central Limiy Theorem. **(5)**

Ans. Power spectral density function and correlation function are very much related together by the following relation:

$$S_X(f) = \int_{-\infty}^{\infty} R_X(\tau)\exp(-j2\pi f\tau)d\tau$$

and

$$R_X(\tau) = \int_{-\infty}^{\infty} S_X(f)\exp(j2\pi f\tau)df$$

Properties of PSD:

(1) The zero frequency value of PSD is the total area under the curve of auto correlation function

$$\Rightarrow \quad S_X(o) = \int_{-\infty}^{\infty} R_X(\tau)d\tau$$

(2) Mean square value of a stationary process equals the area under the graph of the power spectral density

$$\Rightarrow \quad E[x^2(t)] = \int_{-\infty}^{\infty} S_x(f)df$$

(3) Power spectral density of a stationary process is always non-negative e.g.

$$S_X(f) \geq 0 \text{ for all } f.$$

(4) Power spectral density of a real valued random process is an even function of frequency

$$\text{e.g. } S_X(-f) = S_X(f)$$

(5) PSD when appropriately normalized has the properties usually associated with a probobility dinsity function.

$$P_X(f) = \frac{S_x(f)}{\int_{-\infty}^{\infty} S_x(f)df}$$

As per central limit theorem when many variable (say 'n') of any distribution type pass through a LTI system, the output variable approaches to a Gaussian distribution, as 'n' increases.

END TERM EXAMINATION [DEC. 2016]
FIFTH SEMESTER [B.TECH]
DIGITAL COMMUNICATION [ETEC–303]

Time : 3 hrs. **M.M. : 75**

Note: *Questions One is complusory. Attempt any five more questions from the rest of the Questions..*

Q.1. Attempt All:

(*a*) Discuss the properties and statistical characteristics of AWGN Channel:" **(5)**

Ans. Additive White Gaussian Noise Channel:

A basic and generally accepted model for thermal noise in communication channels, is the set of assumptions that

- the noise is additive, *i.e.*, the received signal equals the transmit signal plus some noise, where the noise is statisticaly independent of the signal.
- the noise is white, i.e, the power spectral density is flat, so the autocorrelation of the noise in time domain is zero for any non-zero time offset.
- the noise samples have a Gaussian distribution.

Mostly it is also assumed that the channel is Linear and Time Invariant. The most basic results further asume that it is also frequency non-selective

It's a simple model of the imperfections that a communication channel consists of. When you transmit a certain signal into space or atmosphere or copper line to be received at the other end, there are disturbances (aka noise) present in the channel(space/atmosphere/copper line) due to various reasons. One such reason is the thermal noise by the virtue of electrons movement in the electronic circuit being used for transmission and reception of the signal. This disturbance or noise is modelled as Additive White Gaussian Noise.

Let's first see the time-domain behaviour of this noise :

Additive: Because the noise will get added to your transmitted signal not multiplied. So, the received signal $y(t) = x(t) + n(t)$, where $x(t)$ was the original clean transmitted signal, and n(t) is the noise or disturbance in the channel.

Gaussian: This thermal noise is random in nature, of course noise can't be deterministic otherwise you would subtract the deterministic noise from $y(t)$ as soon as you receive $y(t)$. So, this random thermal noise has Gaussian distribution with 0 mean and variance as the Noise power. Just leave the variance part if you don't understand it now, remember only that if variance of Gaussian is high then its bad as you may need to increase the power of $x(t)$ or be satisfied with higher probability of error. 0 mean means that the expected value $n(t)$ during any time interval T is 0. But simply put, it also means that on an average $n(t)$ will take 0 value. And probability of $n(t) = 0$ is the highest and probability rapidly decreases as you increase the magnitude of n(t).

Q.1. (*b*) Represent the data 010011110 in Bipolar Return to Zero line coding format and AMI Line coding Format. **(5)**

Ans. Given data = '010011110'

(1) Bipolar Return to zero (Rz)

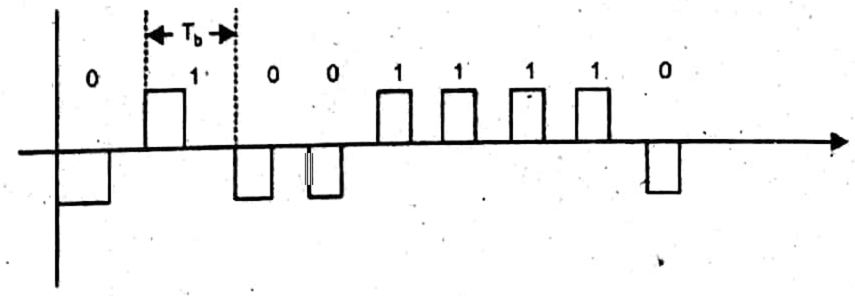

(2) Alternate mark inversion (AMI)

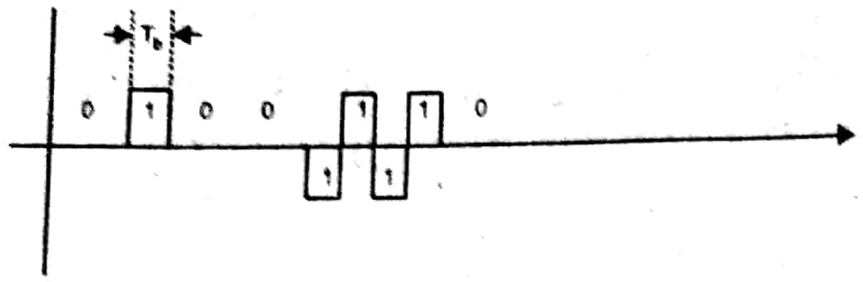

Q.1.(c) Differentiate between Strict Sense Stationary (SSS) and Wide Sense Stationary (WSS) Random Processes with proper example. **(5)**

Ans. Strict-sense Stationary Process:

A random process $\{X(t)\}$ is called strict-sense stationary (SSS) if its probability structure is invariant with time. In terms of the joint distribution function, $\{X(t)\}$ is called SSS if

$$F_{X(t_1),X(t_2)\ldots,X(t_n)}(x_1, x_2\ldots,x_n) = F_{X(t_1+t_0),X(t_2+t_0)\ldots X(t_n+t_0)}(x_1, x_2\ldots,x_n)$$

$\forall n \in N, \forall t_0 \in \Gamma$ and for all choices of sample point $t_1, t_2,\ldots t_n \in \Gamma$.

Thus the joint distribution functions of any set of random variables $X(t_1), X(t_2)\ldots, X(t_n)$ does not depend on the placement of the origin of the time axis. This requirement is a very strict. Less strict form of stationarity may be defined.

Particularly,

if $F_{X(t_1),X(t_2)\ldots X(t_n)}(x_1,x_2\ldots x_n) = F_{X(t_1+t_0),X(t_2+t_0),\ldots,X(t_n+t_0)}(x_1,x_2\ldots x_n)$ for $n = 1,2,\ldots,k$, then $\{X(t)\}$ is called kth order stationary

If $\{X(t)\}$ is stationary up to order 1

$$F_{X(t_1)}(x_1) = F_{X(t_1+t_0)}(x_1)\ \forall t_0 \in T$$

Let us assume $t_0 = -t_1$. Then

$$F_{X(t_1)}(x_1) = F_{X(0)}(x_1) \text{ which is independent of time.}$$

As a consequence

$$EX(t_1) = EX(0) = \mu_x(0) = \text{constant}$$

If $\{X(t)\}$ is stationary up to order 2

$$F_{X(t_1),X(t_2)}(x_1,x_2) = F_{X(t_1+t_0),X(t_2+t_0)}(x_1,x_2)$$

Put $t_0 = -t_2$

$$F_{X(t_1),X(t_2)}(x_1,x_2) = F_{X(t_1-t_2),X(0)}(x_1,x_2)$$

This implies that the second-order distribution dependeds only on the time-lag $t_1 - t_2$. As a consequence, for such a process

$$R_X(t_1,t_2) = E(X(t_1)X(t_2))$$

$$= \int_{-\infty}^{\infty}\int_{-\infty}^{\infty} x_1x_2 f_{X(0)X(t_1-t_2)}(x_1,x_2)dx_1dx_2$$

$$= R_X(t_1-t_2)$$

Similarly,

$$C_X(t_1,t_2) = C_X(t_1-t_2)$$

Therefore, the autocorrelation function of a SSS process depends only on the time lag $t_1 - t_2$. We can also define the joint stationarity of two random processes. Two processes $\{X(t)\}$ and $\{Y(t)\}$ are called jointly strict-sense stationary if their joint

probability distributions of any order is invariant under the translation of time. A complex process is $\{Z(t) = X(t) + jY(t)\}$ is called SSS if $\{X(t)\}$ and are $\{Y(t)\}$ jointly SSS.

Example An iid process is SSS. This is because $\forall n$,

$$F_{X(t_1),X(t_2)\ldots,(t_n)}(x_1,x_2,\ldots,x_n) = F_{X(t_1)}(x_1)F_{X(t_2)}(x_2)\ldots F_{X(t_n)}(x_n)$$
$$= F_X(x_1)F_X(x_2)\ldots F_X(x_n)$$
$$= F_{X(t_1+t_0),X(t_2+t_0)\ldots,X(t_n+t_0)}(x_1,x_2\ldots,x_n)$$

Example The Poisson process is $\{N(t), t \geq 0\}$ not stationary, becouse $EN(t) = \lambda t$, which varies with time.

Wide-sense stationary process

It is very difficult to test whether a process is SSS or not. A subclass of the SSS process called the *wide sense stationary process* is extremely important from practical point of view.

A random process $\{X(t)\}$ is called **wide sense stationary process (WSS)** if

$EX(t)=\mu_X$ = constant

and

$EX(t_1)X(t_2) = R_X(t_1-t_2)$ is a function of time lag $t_1 - t_2$.

(Equivalently, Cov $(X(t_1)X(t_2)) = C_X(t_1-t_2)$ is a function of time lag $t_1 - t_2$)

Q.1.(d) Explain the carrier, recovery technique using Costas Receiver with help of block diagram. **(5)**

Ans. A carrier recovery system is a ***circuit*** used to estimate and compensate for frequency and phase differences between a received signal's **carrier wave** and the receiver's local oscillator for the purpose of coherent **demodulation**

In the transmitter of a communications carrier system, a carrier wave is modulated by a baseband signal. At the receiver the baseband information is extracted from the incoming modulated waveform.

In an ideal communications system, the carrier signal oscillators of the transmitter and receiver would be perfectly matched in frequency and phase thereby permitting perfect coherent demodulation of the modulated baseband signal.

However, transmitters and receivers rarely share the same carrier oscillator. Communications receiver systems are usually independent of transmitting systems and contain their own oscillators with frequency and phase offsets and instabilities. Doppler shift may also contribute to frequency differences in mobile radio frequency communications systems.

All these frequency and phase variations must be estimated using information in the received signal to reproduce or recover the carrier signal at the receiver and permit coherent demodulation

Decision-directed Costas loop: A Costas loop is basically a special use of a phase lock loop (PLL) for estimating carrier frequency and phase errors and for disciplining

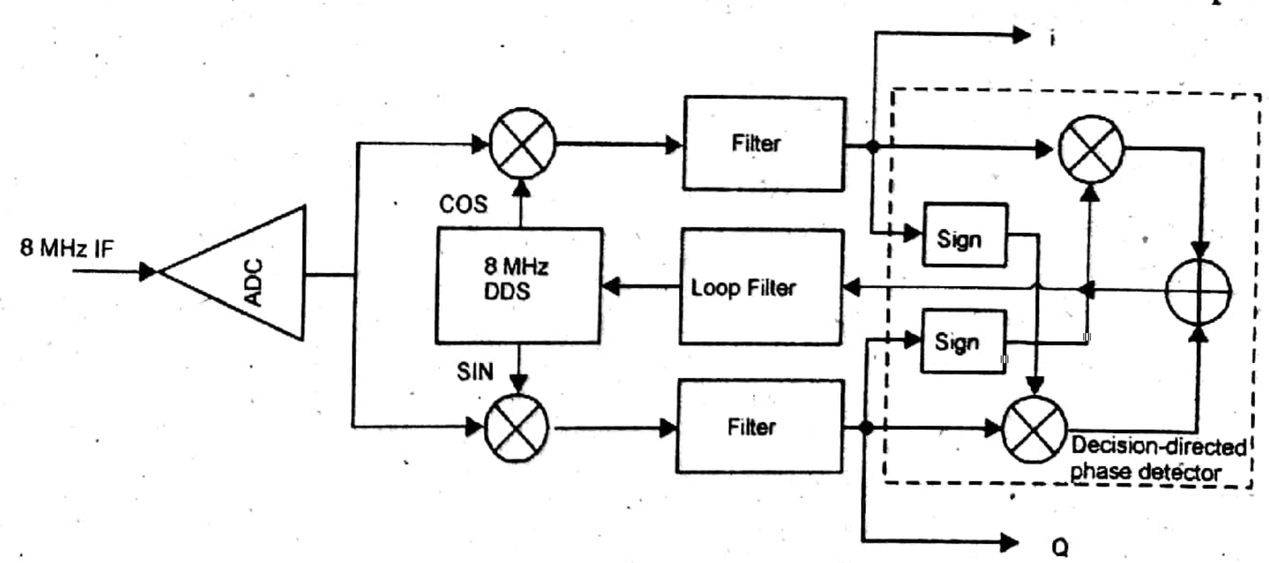

Fig. 1: Quadrature decision-directed Costas loop

the receiver's local oscillator. At the heart of the Costas loop is the quadrature decision-directed phase detector and loop filter circuits, as shown in Figure 1.

The loop filter is usually a proportional-integral (PI) filter providing both frequency and phase tracking of the Costas loop. Due to the limited scope of this blog post, I'll leave PI filter design and tuning problems to the readers. In this post, assume that we want to demodulate 4-QAM symbols having –1 or +1 values per I/Q rail. It turns out that a multiplier-less phase detector can be implemented in System Generator

Q.1.(e) Obtain the relation for bandwidth requirement of FSK Modulated signal. **(5)**

Ans. Frequency-shift keying (FSK) is a *frequency modulation* scheme in which digital information is transmitted through discrete frequency changes of a *carrier* signal. The technology is used for communication systems such as amateur radio, caller ID and emergency broadcasts. The simplest FSK is **binary FSK (BFSK)**. BFSK uses a pair of discrete frequencies to transmit binary (0s and 1s) information. With this scheme, the "1" is called the mark frequency and the "0" is called the space frequency. The time domain of an FSK modulated carrier is illustrated in the figures.

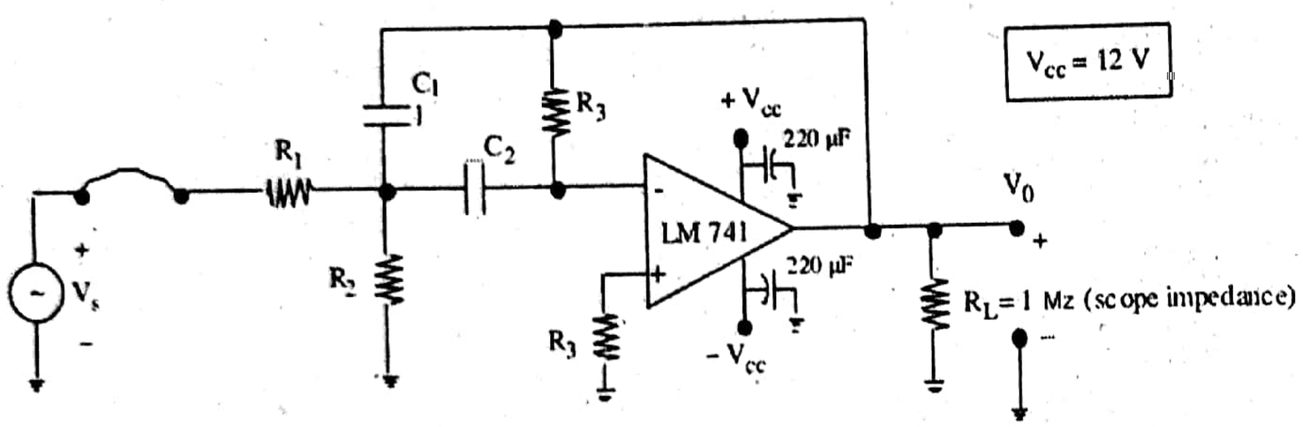

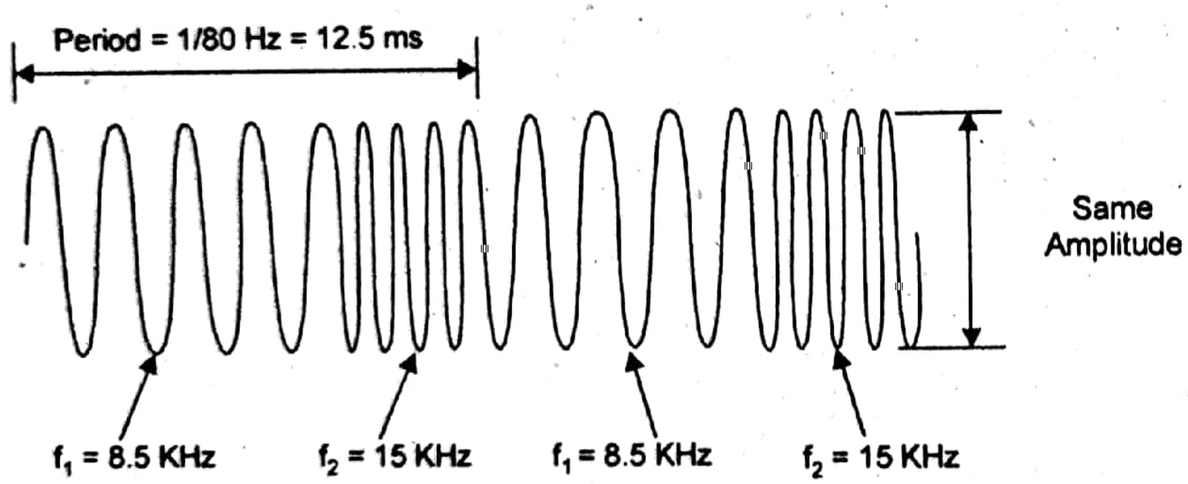

UNIT-I

Q.2. Explain the significance of Companding in Digital following compression techniques.

(i) µ-Law Compression **(ii) A-Law Compression**

Ans. Companding The human auditory system is believed to be a logarithmic process in which high amplitude sounds do not require the same resolution as low amplitude sounds. The human ear is more sensitive to quantization noise in small signals than large signals. A-law and m-law coding apply a logarithmic quantization function to adjust the data resolution in proportion to the level of the input signal. Smaller signals are represented with greater precision – more data bits – than larger signals. The result is fewer bits per sample to maintain an audible signal-to-noise ratio

(SNR). Rather than taking the logarithm of the linear input data directly, which can be computationally difficult, A law/m-law PCM matches the logarithmic curve with a piece-wise linear approximation. Eight straight-line segments along the curve produce a close approximation to the logarithm function. Each segment is known as a chord. Within each chord, the piece-wise linear approximation is divided into equally size quantization intervals called steps. The step size between adjacent codewords is doubled in each succeeding chord. Also encoded is the sign bit for the original integer. The result is an 8-bit logarithmic code composed of a 1-bit sign bit, a 3-bit chord, and a 4-bit step.

Digital Companding: Digital Companding involves compression in the transmitter after the input sample has been converted to a linear PCM code and then expansion in the receiver prior to PCM decoding. Digitally compressed PCM codes use a 12 –bit linear PCM code and convert into 8-bit Compressed PCM Code

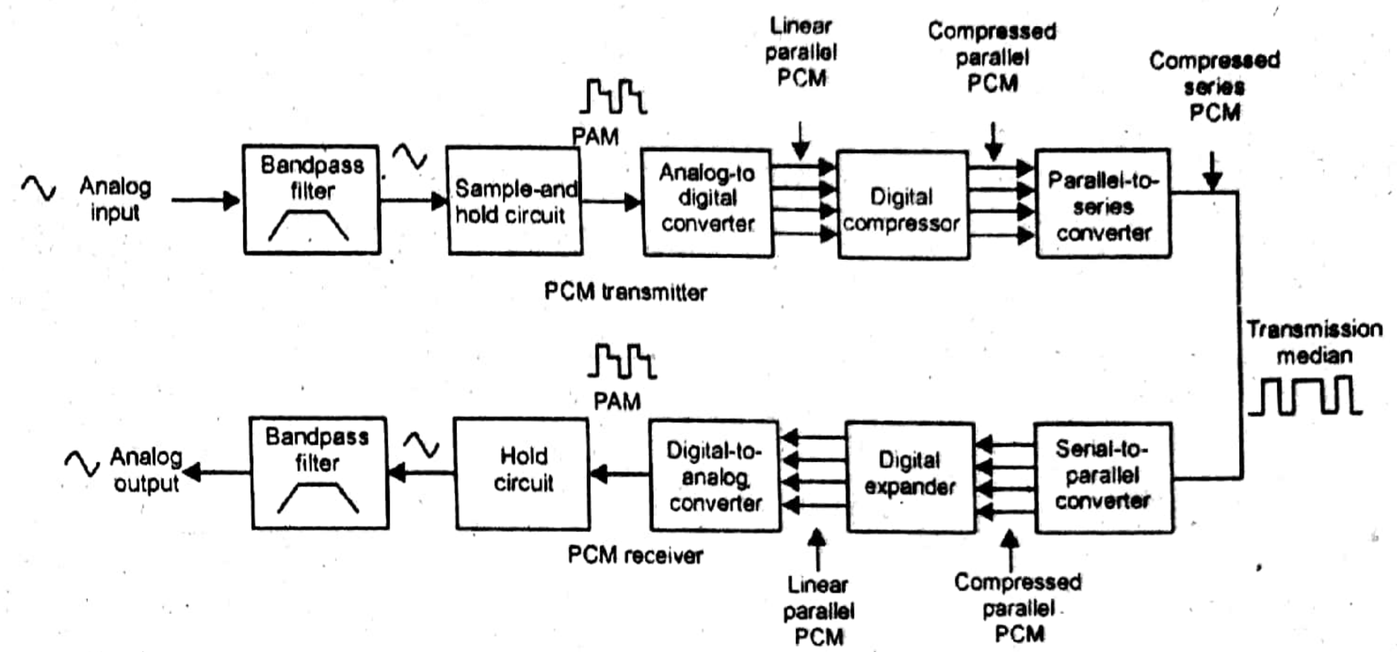

A-Law Compander A-law is the CCITT recommended companding standard used across Europe. Limiting the linear sample values to 12 magnitude bits, the A-law compression is defined by Equation 1, where A is the compression parameter (A=87.7 in Europe), and x is the normalized integer to be compressed.

$$V_{out} = V_{max}\frac{\frac{AV_{in}}{V_{max}}}{1+\ln A} \quad 0 \le \frac{V_{in}}{V_{max}} \le \frac{1}{A}$$

$$= \frac{1+\ln\left(\frac{AV_{in}}{V_{max}}\right)}{1+\ln A} \quad \frac{1}{A} \le \frac{V_{in}}{V_{max}} \le 1$$

In Europe, the ITU-T has established, A-law companding to be used to approximate true logarithmic companding. For an intended dynamic range, A-Law companding has slightly flatter SQR than µ-Law. A-Law companding is inferior to µ-Law in terms of small signal quality (ideal channel noise).

µ-Law Companding: In USA and Japan, µ-law companding is used. The compression characteristics for µ-law is

$$V_{out} = \frac{V_{max}\ln\left(1+\frac{\mu V_{in}}{V_{max}}\right)}{\ln(1+\mu)}$$

V_{max} = Maximum uncompressed analog input amplitude

V_{in} = Amplitude of input signal at particular instant of time

μ = Parameter used to define the amount of compression

V_{out} = Compressed output amplitude (volts)

The diagram shows μ- law compression characteristics. It shows compression curves for several values of μ. Higher the μ, more the compression. For $\mu = 0$, the curve is linear (no compression). In recent PCM system, it uses 8-bit PCM code and μ=255.

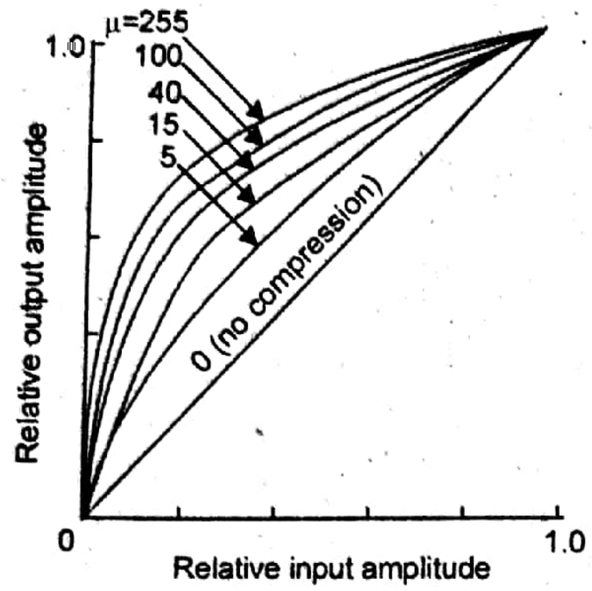

Q.3. With the help of Block diagrams explain the functionality of ADM Transmitter and receiver. Interpret the signal representation after each block. (12.5)

Ans. The sampling rate of a signal should be higher than the Nyquist rate, to achieve better sampling. If this sampling interval in Differential PCM is reduced considerably, the sampleto-sample amplitude difference is very small, as if the difference is **1-bit quantization**, then the step-size will be very small i.e., Δ (delta).

Delta Modulation

The type of modulation, where the sampling rate is much higher and in which the stepsize after quantization is of a smaller value Δ, such a modulation is termed as **delta modulation.**

Features of Delta Modulation

Following are some of the features of delta modulation.

An over-sampled input is taken to make full use of the signal correlation.

The quantization design is simple.

The input sequence is much higher than the Nyquist rate.

The quality is moderate.

The design of the modulator and the demodulator is simple.

The stair-case approximation of output waveform.

The step-size is very small, i.e., Δ (delta).

The bit rate can be decided by the user.

This involves simpler implementation.

Delta Modulation is a simplified form of DPCM technique, also viewed as 1-bit DPCM scheme. As the sampling interval is reduced, the signal correlation will be higher.

Delta Modulator: The Delta Modulator comprises of a 1-bit quantizer and a delay circuit along with two summer circuits. Following is the block diagram of a delta modulator.

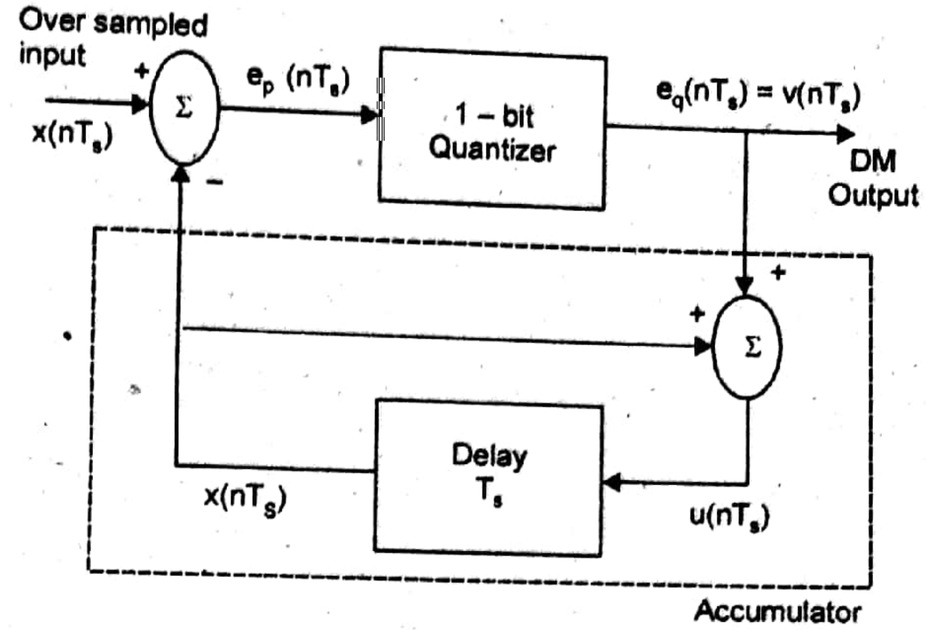

The predictor circuit in DPCM is replaced by a simple delay circuit in DM.

From the above diagram, we have the notations as

$x(nT_s)x(nT_s)$ = over sampled input

$e_p(nT_s)e_p(nT_s)$ = summer output and quantizer input

$e_q(nT_s)e_q(nT_s)$ = quantizer output = $v(nT_s)v(nT_s)$

$\hat{x}\ (nT_s)\ \hat{x}\ (nT_s)$ = output of delay circuit

$u(nT_s)u(nT_s)$ = input of delay circuit

Using these notations, now we shall try to figure out the process of delta modulation.

$e_p(nT_s)=x(nT_s)-\hat{x}\ (nT_s)\ e_p(nT_s)= x(nT_s) - \hat{x}\ (nT_s)$ equation 1

$=x(nT_s)-u([n-1]T_s)= x(nT_s)-u([n-1]T_s)$

$=x(nT_s)-[\hat{x}\ [[n-1]T_s]+v[[n-1]T_s]]=x(nT_s)-[\hat{x}\ ][n-1]T_s]+v[[n-1]T_s]]$ equation 2

Further,

$v(nT_s)=e_q(nT_s)=S.sig.[e_p(nT_s)]v(nT_s)=e_q(nT_s)=S.sig.[e_p(nT_s)]$ equation 3

$u(nT_s)=\hat{x}\ (nT_s)+e_q(nT_s)u(nT_s)=\hat{x}\ (nT_s)+e_q(nT_s)$

Where,

$\hat{x}\ (nT_s)\ \hat{x}\ (nT_s)$ = the previous value of the delay circuit

$e_q(nT_s)e_q(nT_s)$ = quantizer output = $v(nT_s)v(nT_s)$

Hence,

$u(nT_s) = u([n-1]T_s)+v(nT_s)u(nT_s)=u([n-1]T_s)+v(nT_s)$ equation 4

Which means,

The present input of the delay unit

= (The previous output of the delay unit) + (the present quantizer output)

Assuming zero condition of Accumulation,

$u(nT_s)=S\Sigma j=1nsig[e_p(jT_s)]u(nT_s)=S\Sigma j=1nsig[e_p(jT_s)]$

Accumulated version of DM output = $\Sigma j=1nv(jT_s)\Sigma j=1nv(jT_s)$ equation 5

Now, note that

$\hat{x}\ (nT_s)=u([n-1]T_s)\ \hat{x}\ (nT_s)=u([n-1]T_s)$

$=\Sigma j=1n-1v(jT_s)=\Sigma j=1n-1v(jT_s)$ equation 6

Delay unit output is an Accumulator output lagging by one sample.

From equations 5 and 6, we get a possible structure for the demodulator.

A Stair-case approximated waveform will be the output of the delta modulator with the step-size as delta (Δ). The output quality of the waveform is moderate.

Delta Demodulator: The delta demodulator comprises of a low pass filter, a summer, and a delay circuit. The predictor circuit is eliminated here and hence no assumed input is given to the demodulator.

Following is the diagram for delta demodulator.

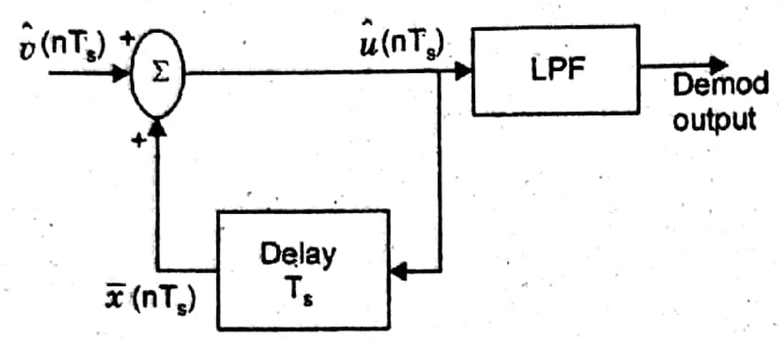

From the above diagram, we have the notations as–

$\hat{v}(nT_s)$ $\hat{v}(nT_s)$ is the input sample

$\hat{u}(nT_s)$ $\hat{u}(nT_s)$ is the summer output

$\bar{x}(nT_s)$ $\bar{x}(nT_s)$ is the delayed output

A binary sequence will be given as an input to the demodulator. The stair-case approximated output is given to the LPF. Low pass filter is used for many reasons, but the prominent reason is noise elimination for out-of-band signals. The step-size error that may occur at the transmitter is called **granular noise**, which is eliminated here. If there is no noise present, then the modulator output equals the demodulator input.

Advantages of DM Over DPCM

1-bit quantizer

Very easy design of the modulator and the demodulator

However, there exists some noise in DM.

Slope Over load distortion (when Δ is small)

Granular noise (when Δ is large)

Adaptive Delta Modulation (ADM): In digital modulation, we have come across certain problem of determining the step-size, which influences the quality of the output wave.

A larger step-size is needed in the steep slope of modulating signal and a smaller stepsize is needed where the message has a small slope. The minute details get missed in the process. So, it would be better if we can control the adjustment of step-size, according to our requirement in order to obtain the sampling in a desired fashion. This is the concept of **Adaptive Delta Modulation.**

Following is the block diagram of Adaptive delta modulator.

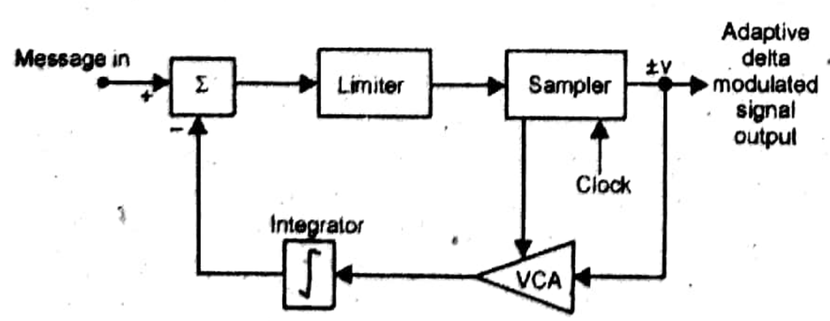

Adaptive delta modulator

The gain of the voltage controlled amplifier is adjusted by the output signal from the sampler. The amplifier gain determines the step-size and both are proportional.

ADM quantizes the difference between the value of the current sample and the predicted value of the next sample. It uses a variable step height to predict the next values, for the faithful reproduction of the fast varying values.

UNIT-II

Q.4. Discuss about the following entities used for statistical analysis of Random signals.

(*i*) Power Spectral Density

(*ii*) Joint PDF

(*iii*) Marginal PDF

Give the relevant mathematical treatment, **(12.5)**

Ans. (*i*) Power Spectral Density:

Random processes in the time domain. It is often very useful to study random processes in the frequency domain as well. To do this, we need to use the Fourier transform. Here, we will assume that you are familiar with the Fourier transform. A brief review of the Fourier transform and its properties is given in the appendix.

Consider a WSS random process X(t)X(t) with autocorrelation function RX(T)RX(T). We define the *Power Spectral Density* (*PSD*) of X(t)X(t) as the Fourier transform of RX(T)RX(T). We show the PSD of X(t)X(t), by SX(f)SX(f). More specifically, we can write

Power Spectral Densfty (PSD) is the frequency response of a random or periodic signal. It tells us where the average power is distributed as a function of frequency.

• The PSD is deterministic, and for certain types of random signals is independent of time. This is useful because the Fourier transform of a random time signal is itself random, and therefore of little use calculating transfer relationships (i.e., finding the output of a filter when the input is random).

• The PSD of a random time signal x(t) can be expressed in one of two ways that are equivalent to each other

1.The PSD is the average of the Fourier transform magnitude squared, over a large time interval

$$S_x(f) = \lim_{T\to\infty} E\left\{\frac{1}{2T}\left|\int_{-T}^{T} x(t)e^{-j2\pi ft}dt\right|^2\right\}$$

2.The PSD is the Fourier transform of the auto-correlation function.

$$S_x(f) = \int_{-T}^{T} R_x(\tau)e^{-j2\pi ft}dt$$

$$R_x(\tau) = E\{x(t)x^*(t+\tau)\}$$

2. Joint PDF

Consider two continuous jointly random variables X and Y with the joint probability distribution function $F_{XY}(x,y)$. We are interested to find the conditional distribution of one of the random variables on the condition of a particular value of the other random variable.

We cannot define the conditional distribution of the random variable Y on the condition of the event $\{X = x\}$ by the relation

$$F_{Y/X}(y/x) = P(Y \le y/X = x)$$

$$= \frac{P(Y \le y, X = x)}{P(X = x)}$$

as $P(X = x) = 0$ in the above expression. The conditional distribution function is defined in the limiting sense as follows:

$$F_{Y/X}(y/x) = \lim_{\Delta x \to 0} P(Y \le y / x < X \le x + \Delta x)$$

$$= \lim_{\Delta x \to 0} \frac{P(Y \le y, x < X \le x + \Delta x)}{P(x < X \le x + \Delta x)}$$

$$= \lim_{\Delta x \to 0} \frac{\int_{\infty}^{y} f_{X,Y}(x,u)\Delta x du}{f_X(x)\Delta x}$$

$$= \frac{\int_{\infty}^{y} f_{X,Y}(x,u) du}{f_X(x)}$$

Example: For random variables X and Y, the joint probability density function is given by

$$f_{X,Y}(x,y) = \frac{1+xy}{4} \quad |x| \le 1, |y| \le 1$$

$$= 0 \text{ otherwise}$$

Find the marginal density $f_X(x)$, $f_Y(y)$ and $f_{Y/X}(y/x)$. Are X and Y independent?

$$f_X(x) = \int_{-1}^{1} \frac{1+xy}{4} dy = \frac{1}{2}$$

Similarly

$$f_Y(y) = \frac{1}{2} \quad -1 \le y \le 1$$

and

$$f_{Y/X}(y/x) = \frac{f_{X,Y}(x,y)}{f_X(x)}$$

$$= \frac{1+xy}{2} \ne f_Y(y)$$

Hence, X and Y are not independent.

Jointly distributed discrete random variables

If X and Y are two discrete random variables defined on the same probability space (S, F, P) such that X takes values from the countable subset R_X and Y takes values from the countable subset R_Y. Then the joint random variable (X,Y) can take values from the countable subset in $R_X \times R_Y$ The joint random variable (X,Y) is completely specified by their joint probability mass function

$$P_{X,Y}(x,y) = P\{s \mid X(s) = x, Y(s) = y\}, \ \forall (x,y) \in R_X \times R_Y.$$

Given $P_{X,Y}(x,y)$, we can determine other probabilities involving the random variables X and Y.

Remark

$$p_{X,Y}(x,y) = 0 \text{ for } (x,y) \notin R_X \times R_Y$$

$$\sum_{(x,y) \in R_X \times R_Y} \sum p_{X,Y}(x,y) = 1$$

This is because

$$\sum_{(x,y) \in R_X \times R_Y} \sum p_{X,Y}(x,y) = P\left(\bigcup_{(x,y) \in R_X \times R_Y} \{x,y\}\right)$$

$$= P(R_X \times R_Y)$$

$$= P(s \mid (X(s), Y(s)) \in (R_X \times R_Y)\}$$

$$= P(S) = 1$$

3. Marginal PDF:

The probability mass functions $P_X(x)$ and $P_Y(y)$ are obtained from the joint probability mass function as follows

$$p_X(x) = P\{X = x\} \cup R_Y$$

$$= \sum_{y \in R_Y} p_{X,Y}(x,y)$$

and similarly

$$p_Y(y) = \sum_{x \in R_X} p_{X,Y}(x,y)$$

These probability mass functions $P_X(x)$ and $P_Y(y)$ obtained from the joint probability mass functions are called *marginal probability mass functions*.

Q.5. Obtain the relation of Probability Density Function (PDF) of Gaussian distribution. Discuss the role of central limit Theorem in the analysis of Gaussian distribution. (12.5)

Ans. Consider n **independent** random variables $X_1, X_2, \ldots X_n$ The mean and variance of each of the random variables are known. Suppose $E(X_i) = \mu_{X_i}$ and $Var(X_i) = \sigma^2_{X_i}$.

Form a random variable

$$Y_n = X_1 + X_2 + \ldots X_n$$

The mean and variance of Y_n are given by

and $$EY_n = \mu_{Y_n} = \mu_{X_1} + \mu_{X_2} + \ldots \mu_{X_n}$$

var $$(Y_n) = \sigma^2_{Y_n} = E\left\{\sum_{i=1}^{n} (X_i - \mu_{Xi})\right\}^2$$

$$= \sum_{i=1}^{n} E(X_i - \mu_{X_i})^2 + \sum_{i=1, j=1, j \ne i}^{n} \sum^{n} E(X_i - \mu_i)(X_j - \mu_j)$$

$$= \sigma^2_{X_i} + \sigma^2_{X_2} + \ldots + \sigma^2_{X_n}$$

$\because X_i$ and X_j are independent for $(i \ne j)$

Thus we can determine the mean and variance of Y_n. *Can we guess about the probability* distribution of Y_n?

The *central limit theorem (CLT)* provides an answer to this question.

The CLT states that under very general conditions $\left\{Y_n = \sum_{i=1}^{n} X_i\right\}$ converges *in distribution* to $Y \sim N(\mu_Y, \sigma^2_Y)$ as $n \to \infty$. The conditions are:

The random variables $X_1, X_2, \ldots, X_n$ are independent with same mean and variance, but not identically distributed.

The random variables $X_1, X_2, \ldots, X_n$ are independent with different means and same variance and not identically distributed.

The random variables $X_1, X_2, \ldots, X_n$ are independent with different means and each variance being neither too small nor too large.

We shall consider the first condition only. In this case, the central-limit theorem can be stated as follows:

Suppose $X_1, X_2, \ldots, X_n$ is a sequence of independent and identically distributed random variables each with mean μ_X and variance σ_X^2 and $Y_n = \sum_{i=1}^{n} \frac{(X_i - \mu_X)}{\sqrt{n}}$. Then, the sequence $\{Y_n\}$ *converges in distribution* to a Gaussian random variable Y with mean 0 and variance σ_X^2. That is,

$$\lim_{n \to \infty} F_{Y_n}(Y) = \int_{-\infty}^{y} \frac{1}{\sqrt{2\pi\sigma_X}} e^{-u^2/2\sigma_X^2} du$$

Remarks: The central limit theorem is really a property of convolution, Consider the sum of two statistically independent random variables, say, $Y = X_1 + X_2$. Then the pdf $f_Y(y)$ the convolution of $f_{X_1}(x)$ and $f_{X_2}(x)$. This can be shown with the help of the characteristic functions as follows:

$$\phi_Y(\omega) = E\left[e^{j\omega(X_1+X_2)}\right]$$

$$= E(e^{j\omega X_1})E(e^{j\omega X_2}) = \phi_{X_1}(\omega)\phi_{X_2}(\omega)$$

$$\therefore f_Y(x) = f_{X_1}(y) * f_{X_2}(y)$$

$$= \int_{-\infty}^{\infty} f_{X_1}(\tau) f_{X_2}(y-\tau) d\tau$$

where * is the convolution operation.

We can illustrate this by convolving two uniform distributions repeatedly. The convolution of two uniform distributions gives a triangular distribution. Further convolution gives a parabolic distribution and so on.

UNIT-III

Q.6.(*a*) Discuss analysis of following digital Receivers. **(6.5)**

(*a*) Correlator Receiver

Ans. Correlation Receiver:

Suppose a set of N basis functions $\{f_n(t), n = 1,2,\ldots,N\}$ span the signal space and therefore is enough to decompose the received signal into N-dimensional vector.

The received signal is passed through a parallel bank of N cross correlators, which transfers the waveform into vector element (the projection of $r(t)$ onto $\{f_n(t), n = 1,2,\ldots,N\}$.

Thus, we have at the output of the integrator

$$\int_0^T r(t) f_k(t) dt = \int_0^T [s_m(t) + n(t)] f_k(t) dt$$

$$r_k = s_{mk} + n_k, \quad k = 1, 2, \ldots, N$$

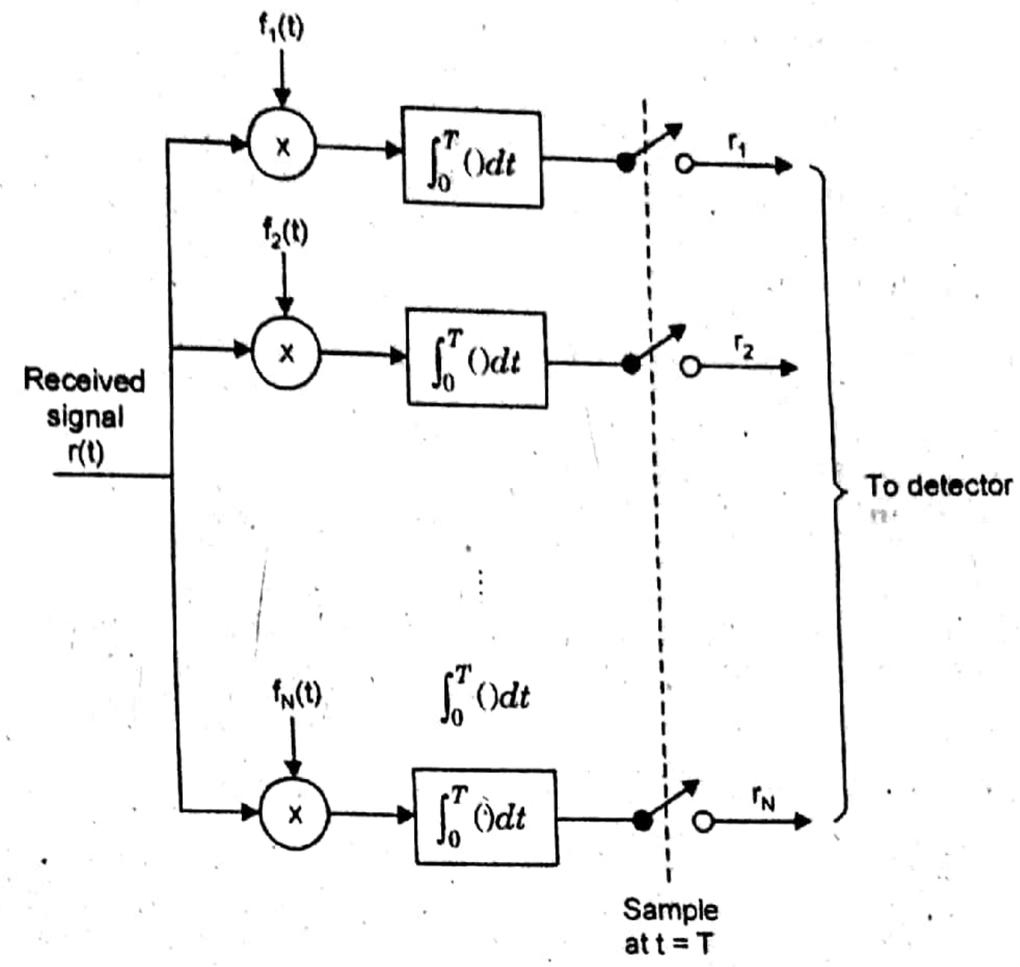

Fig. Correlation–type demodulator

where

$$s_{mk} = \int_0^T s_m(t) f_k(t) dt, k = 1,2,\ldots,N$$

$$n_k = \int_0^T n(t) f_k(t) dt, k = 1,2,\ldots,N$$

Note that s_{mk}, $k = 1,2,\ldots,N$ are deterministic and form the vector s_m, however, n_k is a random variable.

Q.6. (*b*) Maximum Likelihood Receiver

Ans. Maximum Likelihood Receiver:

Suppose that the detector output, h, contains either noise alone, $h = s + n$, or both a signal and noise, $\Lambda = \frac{P(h \mid s)}{P(h \mid \neg s)}$. The maximum likelihood receiver $P(h \mid s)$ returns the quantity where $P(h \mid \neg s)$ is the probability of obtaining the output given that there is a signal present and Λ is the probability of obtaining the output given that there is no signal present. The likelihood ratio $\frac{P(s \mid h)}{P(\neg s \mid h)} = \Lambda \frac{P(s)}{P(\neg s)}$ can be viewed as the factor which relates the *a priori* probability of a signal being present with the *a posteriori* probability of a signal being present given the detector output:

$P(s)$

In general, there is no universal way of deciding on the *a*

priori probabilities $P(\neg s) = 1 - P(s)$ and, $\Lambda \geq \Lambda_o$, so one is limited to the construction of the likelihood ratio . $\frac{P(s|h)}{P(\neg s|h)} = \Lambda\frac{P(s)}{P(\neg s)}$.. However, as $\frac{P(s|h)}{P(\neg s|h)} = \Lambda\frac{P(s)}{P(\neg s)}$ grows larger, the probability of a signal increases, so we can use it to test our hypotheses as follows:

If $\Lambda < \Lambda_o$, then decide that there is a signal present.

If Λ . then decide that there is no signal present.

Here, As(*t*) is some threshold. Lacking any *a priori* information about whether there is a signal present, the threshold As(*t*) should be determined by setting a desired probability for a false alarm and/or false dismissal.

Q.7. How would avoid Inter Symbol Interference (ISI) in Base band Digital Communication systems. Discuss in detail about any one of the methods to minimize ISI. How eye pattern is useful in determining ISI? (12.5)

Ans. In telecommunication, **intersymbol interference** (ISI) is a form of distortion of a signal in which one symbol interferes with subsequent symbols. This is an unwanted phenomenon as the previous symbols have similar effect as noise, thus making the communication less reliable. The spreading of the pulse beyond its allotted time interval causes it to interfere with neighboring pulses. ISI is usually caused by multipath propagation or the inherent non-linear frequency response of a channel causing successive symbols to "blur" together.

The presence of ISI in the system introduces errors in the decision device at the receiver output. Therefore, in the design of the transmitting and receiving filters, the objective is to minimize the effects of ISI, and thereby deliver the digital data to its destination with the smallest error rate possible.

Ways to fight intersymbol interference include adaptive equalization and error correcting codes

One way to study ISI in a PCM or data transmission system experimentally is to apply the received wave to the vertical deflection plates of an oscilloscope and to apply a sawtooth wave at the transmitted symbol rate R (R = 1/T) to the horizontal deflection plates. The resulting display is called an eye pattern because of its resemblance to the human eye for binary waves. The interior region of the eye pattern is called the eye opening. An eye pattern provides a great deal of information about the performance of the pertinent system.

1.The width of the eye opening defines the time interval over which the received wave can be sampled without error from ISI. It is apparent that the preferred time for sampling is the instant of time at which the eye is open widest.

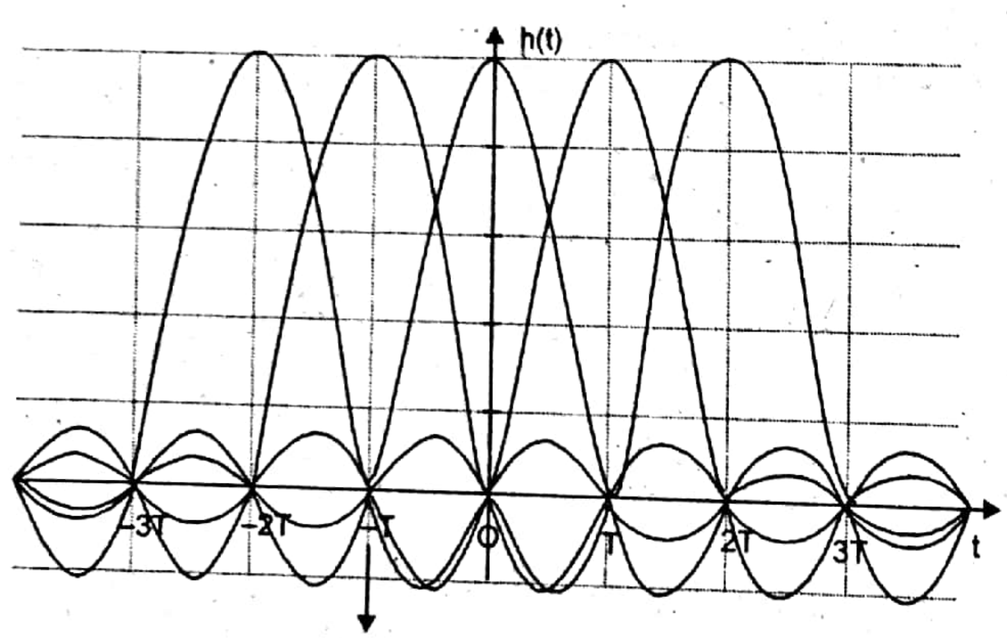

2. The sensitivity of the system to timing error is determined by the rate of closure of the eye as the sampling time is varied.

3. The height of the eye opening, at a specified sampling time, defines the margin over noise

The noise margin- the amount of noise required to cause the receiver to get an error - is given by the distance between the signal and the zero amplitude point at the sampling time; in other words, the further from zero at the sampling time the signal is the better. For the signal to be correctly interpreted, it must be sampled somewhere between the two points where the zero-to-one and one-to-zero transitions cross. Again, the further apart these points are the better, as this means the signal will be less sensitive to errors in the timing of the samples at the receiver.

There are several techniques in telecommunication and data storage that try to work around the problem of intersymbol interference.

- Design systems such that the impulse response is short enough that very little energy from one symbol **smears** into the next symbol.

Consecutive raised-cosine impulses, demonstrating zero-ISI property

- Separate symbols in time with guard periods.
- Apply an equalizer at the receiver, that, broadly speaking, attempts to undo the effect of the channel by applying an inverse filter.
- Apply a sequence detector at the receiver, that attempts to estimate the sequence of transmitted symbols using the Viterbi algorithm.

UNIT-IV

Q.8. Discuss the functioning of QPSK modulator and Demodulator with the help of Block Diagram. Draw the constellation diagram and obtain relation for Band width of QPSK signal. (12.5)

Ans. QPSK, stands for quadrature phase shift keying, that means it is having four phases along with the symbol and each symbol is having a group of two bits hence four combination and each combination is having an idential phase shift.

Bits	Phase
00	$\frac{3\pi}{4}$
01	$5\pi/4$
10	$\pi/4$
11	$7\pi/4$

and constellation diagram is given as follow:

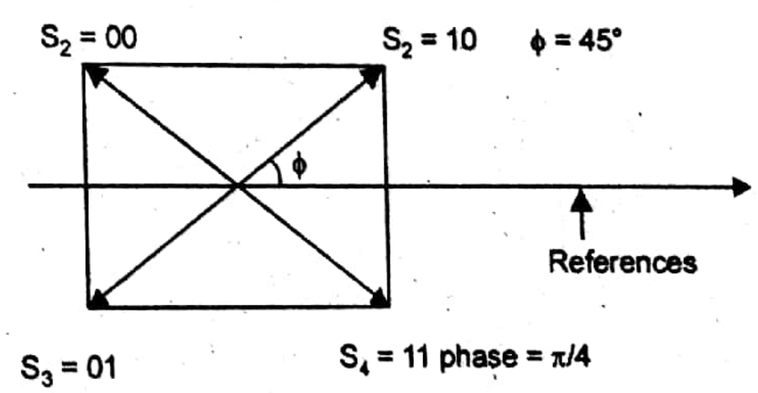

QPSK Modulator:

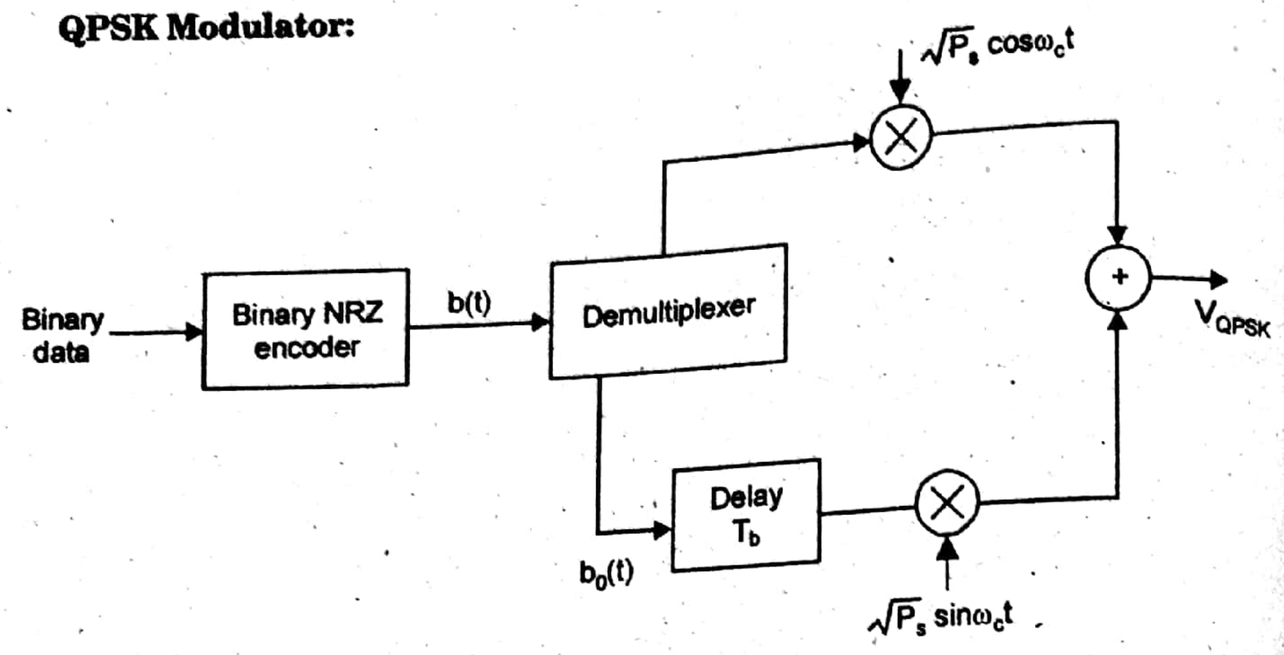

output signal V_{QPSK} can have the following form and can easily be derived from the given block digram.

$$V_{QPSK}(t) = \sqrt{2P_s}\cos\left[w_c t + (2m+1)\frac{\pi}{4}\right]$$

$$m = 0, 1, 2, 3$$

for m = 0 $$S_1 = \sqrt{2P_s}\cos\left[w_c t + \frac{\pi}{4}\right]$$

for m = 1

$$S_2 = \sqrt{2P_s}\cos\left[w_c t + \frac{3\pi}{4}\right]$$

Demodulation of the transmitted signal can easily be obtained from the following circuit block diagram

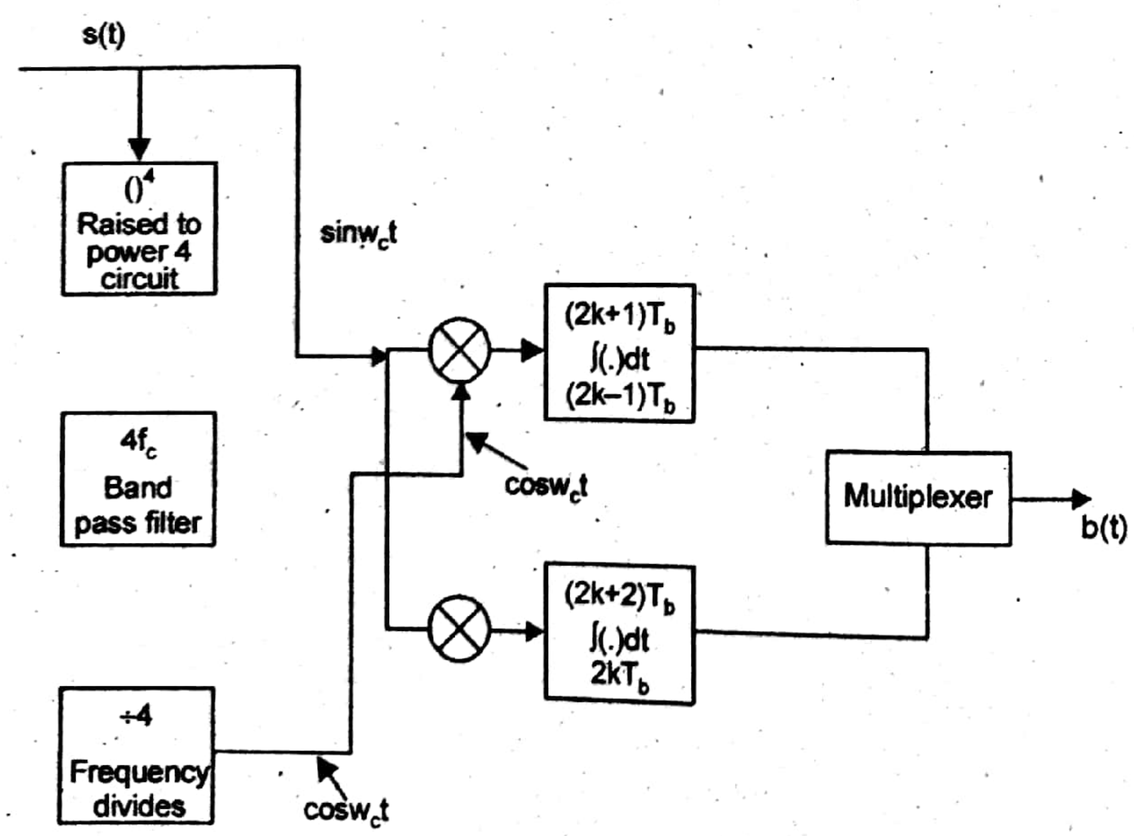

Spectrum of QPSK is observed as

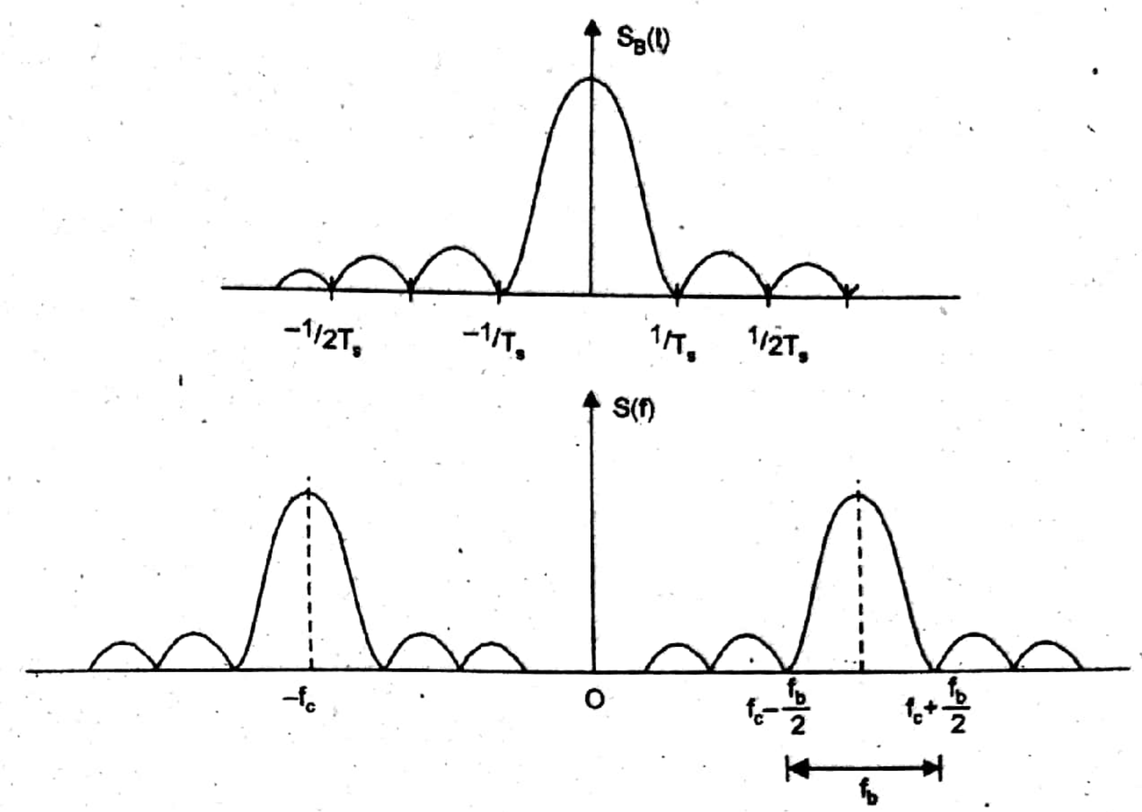

Q.9. Write short notes on the following

Q.9. (*a*) M-ary Schemes along with merits and Demerits. **(6)**

Ans. M-ary Modulation:

Instead of just varying phase, frequency or amplitude of the RF signal, modern m e) and phase (or hift Keying (QPSK) can e used, where (2πfct) for 00 = A cos (2πfct + 90) for 01 Here ph ° is the phase shift in Constellation diagram for Quadrature PSK (QPSK) signal 8-PSK: 45 the modulation techniques allow both envelope (amplitud frequency) of the RF carrier to vary. Because the envelope and phase provide two degrees of freedom, such modulation techniques map baseband data into four or more possible RF carrier signals. Such modulation techniques are known as M-ary modulation. In M-ary modulation scheme, two or more bits are grouped together to form symbols and one of possible signals S1(t), S2(t), .., Sm(t) is transmitted during each symbol period Ts. Normally, the number of possible signals is M = 2n , where n is an integer. Depending on whether the amplitude, phase or frequency is varied, the modulation is referred to as M-ary ASK, M-ary PSK or M-ary FSK, respectively. M-ary modulation technique attractive for use in bandlimited channels, because these techniques achieve better bandwidth efficiency at the expense of power efficiency. For example, an 8-PSK technique requires a bandwidth that is log28 = 3 times smaller than 2-PSK (also known as BPSK) system. However, M-ary signalling results in poorer error performance because of smaller distances between signals in the constellation diagram

Q.9.(*b*) G-MSK Modulation Scheme **(6)**

Ans. Gaussian Minimum Shift Keying, or to give it its full title Gaussian filtered Minimum Shift Keying, GMSK, is a form of modulation used in a variety of digital radio communications systems. It has advantages of being able to carry digital modulation while still using the spectrum efficiently. One of the problems with other forms of phase shift keying is that the sidebands extend outwards from the main carrier and these can cause interference to other radio communications systems using nearby channels.

In view of the efficient use of the spectrum in this way, GMSK modulation has been used in a number of radio communications applications. Possibly the most widely used

is the GSM cellular technology which is used worldwide and has well over 3 billion subscribers

GMSK modulation is based on MSK, which is itself a form of continuous-phase frequency-shift keying. One of the problems with standard forms of PSK is that sidebands extend out from the carrier. To overcome this, MSK and its derivative GMSK can be used.

MSK and also GMSK modulation are what is known as a continuous phase scheme. Here there are no phase discontinuities because the frequency changes occur at the carrier zero crossing points. This arises as a result of the unique factor of MSK that the frequency difference between the logical one and logical zero states is always equal to half the data rate. This can be expressed in terms of the modulation index, and it is always equal to 0.5.

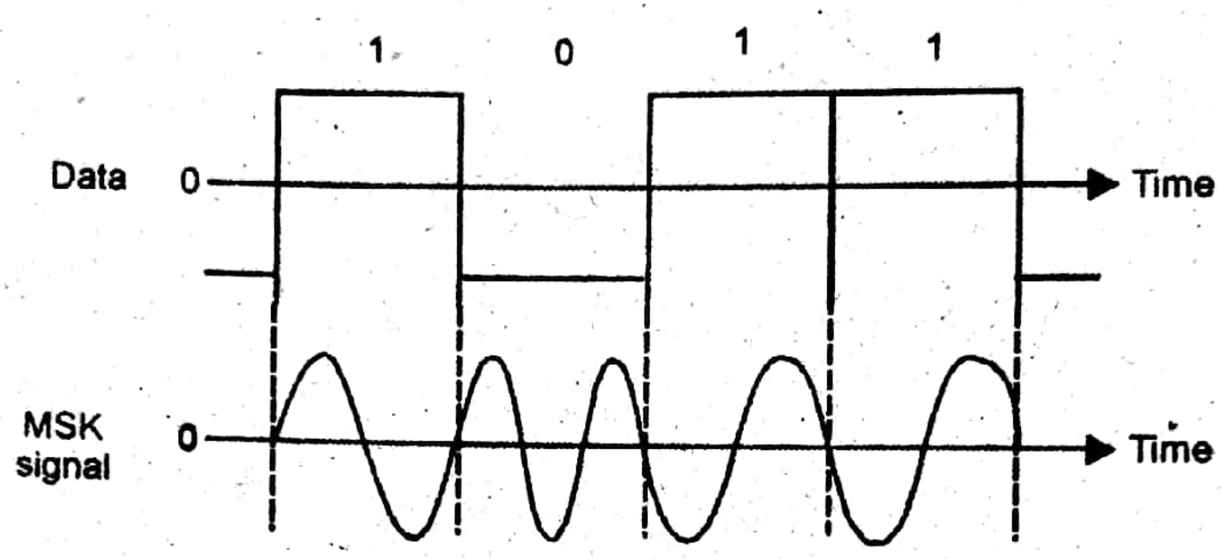

FIRST TERM EXAMINATION [SEPT. 2017]
FIFTH SEMESTER [B.TECH.]
DIGITAL COMMUNICATION
[ETEC–303]

Time : 1½ hrs. **M.M. : 30**

Note: *Attempt Q. No.1 which is compulsory and any two more questions from remaining.*

Q.1. (a) Represent the data 101110101 in Differential Manchester and HDB3 coding. **(2)**

Ans. (*a*)

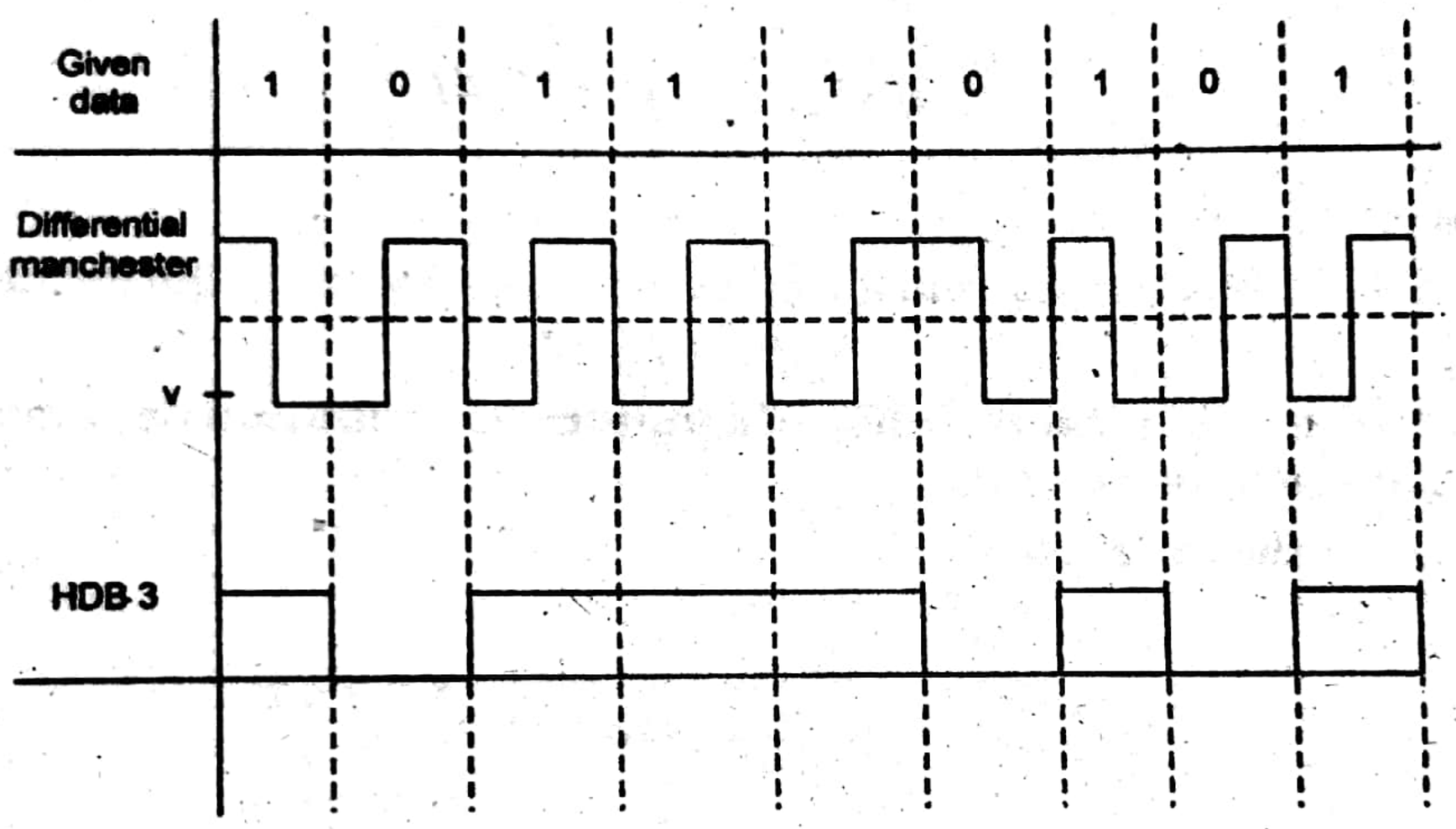

Q.1. (b) What are the advantages and disadvantages of Delta Modulation? **(3)**

Ans. Advantages:

(*i*) It utilizes the given bandwidth efficiently.

(*ii*) It transmits a one bit code for each sample.

Disadvantages:

(*i*) It suffers from slope-overload problem.

(*ii*) It also suffers from granvlar noise problem.

(*iii*) Here sampling rate is kept to be high.

Q.1. (c) State various properties of power spectral density. **(2.5)**

Ans. Properties of power spectral density:

Fundamentally the power spectral density is expressed as

$$S_X(f) = \int_{-\infty}^{\infty} R_X(\tau) e^{-j2\pi f \tau} d\tau$$

Where $R_X(\tau)$ is Acf of wide sense stationary process $X(t)$

Property 1:

Power is obtained at $f = 0$Hz

$$S_X(f) = \int_{-\infty}^{\infty} R_X(\tau)\,d\tau \text{ at } f = 0$$

So

$$S_X(0) = \int_{-\infty}^{\infty} R_X(\tau)\,d\tau$$

Property 2:

The mean square value of wide sense stationary random process is equal to the area covered under the curve of PSD.

$$E[X^2(t)] = \int_{-\infty}^{\infty} S_X(f)\,df$$

Property 3:

The PSD of a WSS process will always be non-negative for all the frequencies

$$S_X(f) \geq 0 \text{ for all } f$$

Q.1. (*d*) Show that the variance of a uniform distribution depends only on the width of the interval (*b*-*a*). **(2.5)**

Ans. As per the Question

$$f_X(x) = \begin{cases} \dfrac{1}{(b-a)} & a \leq x \leq b \\ 0 & otherwise \end{cases}$$

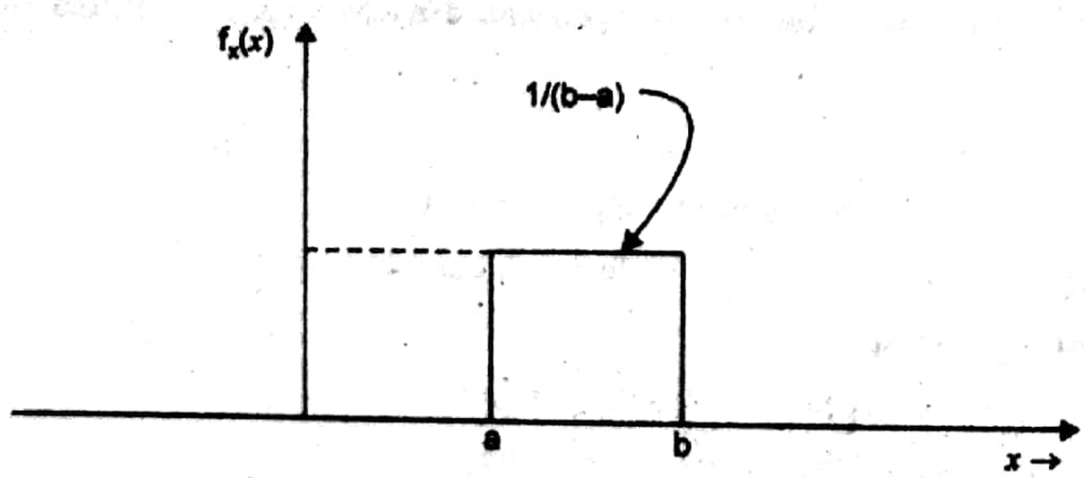

Since variance $(\sigma)^2 = E[(X-m_x)^2]$

$$= E[X^2] - m_x^2$$

$$m_x = \int_{-\infty}^{\infty} x f_x(x)\,dx$$

$$= \frac{1}{(b-a)}\int_a^b x\,dx = \frac{1}{(b-a)}\left[\frac{x^2}{2}\right]_a^b = \frac{1}{2(b-a)}\left[(b)^2 - (a)^2\right] = \frac{b+a}{2}$$

$$E[X^2] = \int_{-\infty}^{\infty} x^2 f_x(x)\,dx$$

$$= \frac{1}{(b-a)}\left[\frac{x^3}{3}\right]_a^b = \frac{b^3 - a^3}{3(b-a)} = \frac{(b^2 + ab + a)^2}{3}$$

So

$$\sigma^2 = \frac{b^2 + ab + a^2}{3} - \frac{b+a}{2} = \frac{2b^2 + 2ab + 2a^2 - 3(b+a)}{6}$$

$$= \frac{(a+b)^2 + a^2 + b^2 - 3(a+b)}{6} = (a+b)\left[a + b + a^2 + b^2 - 3\right]$$

Q.2. (*a*) The bandwidth of an input signal to the PCM is restricted to 4 kHz. The input signal varies in amplitude from –3.8 V to + 3.8 V and has an average power of 30 mW. The required signal to noise ratio is given as 20 dB. The PCM modulator produces binary output. Assuming uniform quantization,

(*i*) Find the number of bits required per sample.

(*ii*) Output of 30 such PCM coders is time multiplexed. What would be the minimum required transmission bandwidth for this multiplexed signal. **(7)**

Ans. Refer to Q. 3. End Term Examination 2017.

Q.2. (*b*) What is A-law and μ-law companding? **(3)**

Ans. A law companding:

Human ear is more sensitive to the quantization noise in small signals than large signals.

A law is a logarithmic quantization function to adjust the data resolution in proportions to the level of input signal.

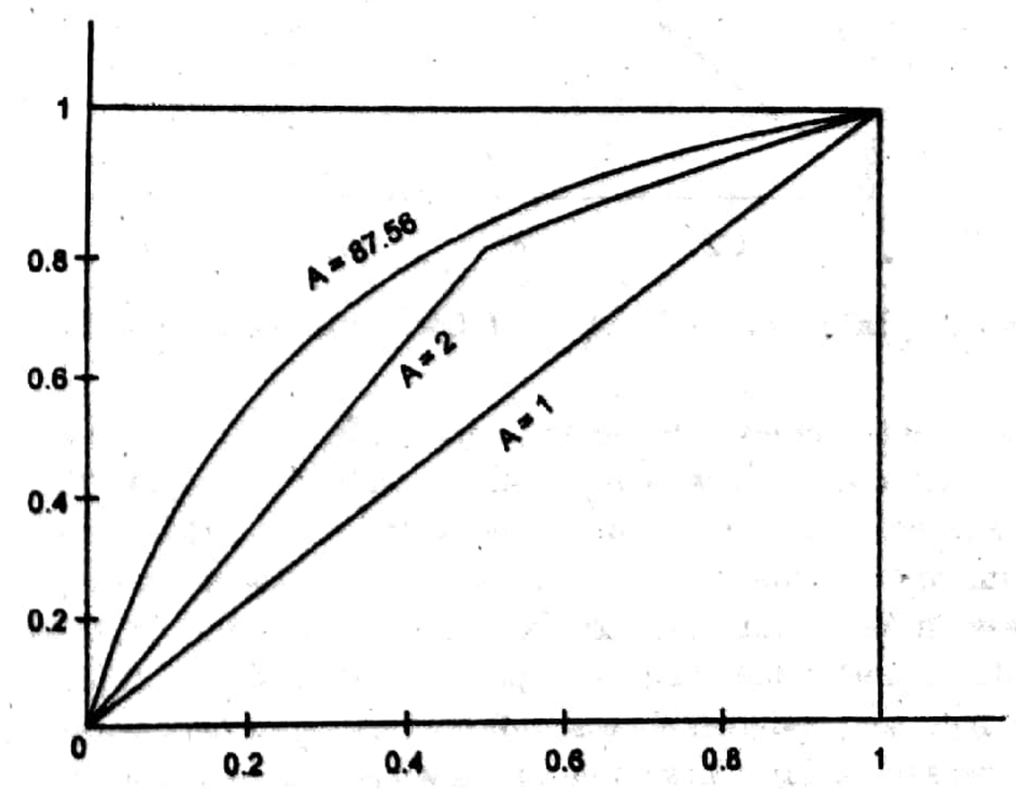

A law can be defined as:

$$\frac{z(x)}{X_{max}} = \begin{cases} \dfrac{A\left(\dfrac{|X|}{X_{max}}\right)}{1+\log_e A} & 0 \le \dfrac{|X|}{X_{max}} \le 1 \\ \dfrac{1+\log_e\left(A\left(\dfrac{|X|}{X_{max}}\right)\right)}{1+\log_e A} & \dfrac{1}{A} \le \dfrac{|X|}{X_{max}} \le 1 \end{cases}$$

μ-law can be expressed as:

$$Z(x) = (Sgn\, x)\frac{\text{In}(1+\mu(|X|/X_{max})}{\text{In}(1+\mu)}$$

Here $0 \le \dfrac{|X|}{X_{max}} \le 1$

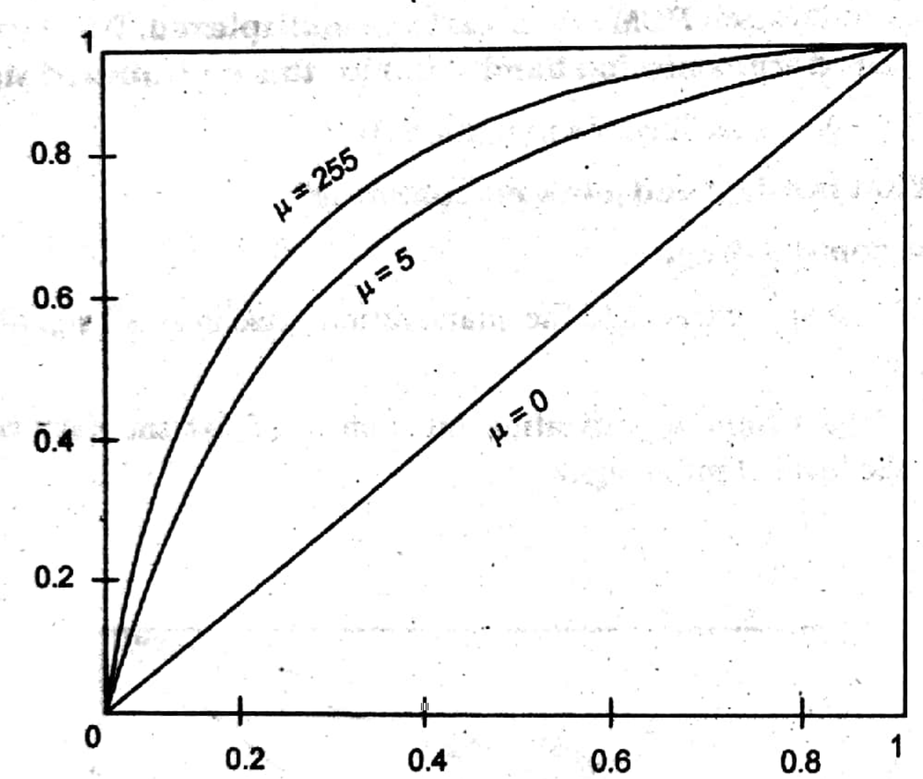

Q.3. (*a*) Explain the technique of Differential Pulse Code Modulation (DPCM). **(5)**

Ans. Differential pulse code modulation (DPCM) is a procedure of converting an analog into a digital signal in which an analog signal is sampled and then the difference between the actual sample value and its predicted value (predicted value is based on previous sample or samples) is quantized and then encoded forming a digital value. DPCM code words represent differences between samples unlike PCM where code words represented a sample value. Basic concept of DPCM - coding a difference, is based on the fact that most source signals show significant correlation between successive samples so encoding uses redundancy in sample values which implies lower bit rate. Realization

of basic concept (described above) is based on a technique in which we have to predict current sample value based upon previous samples (or sample) and we have to encode the difference between actual value of sample and predicted value (the difference between samples can be interpreted as prediction error). Because it's necessary to predict sample value DPCM is form of predictive coding. DPCM compression depends on the prediction technique, well-conducted prediction techniques lead to good compression rates, in other cases DPCM could mean expansion comparing to regular PCM encoding communication is the main transmission means of modern network, its development history is only one hundred and twenty years, but has experienced three generation: short wavelength multimode optical fiber, long wavelength multimode optical fiber and long wavelength single-mode fiber.

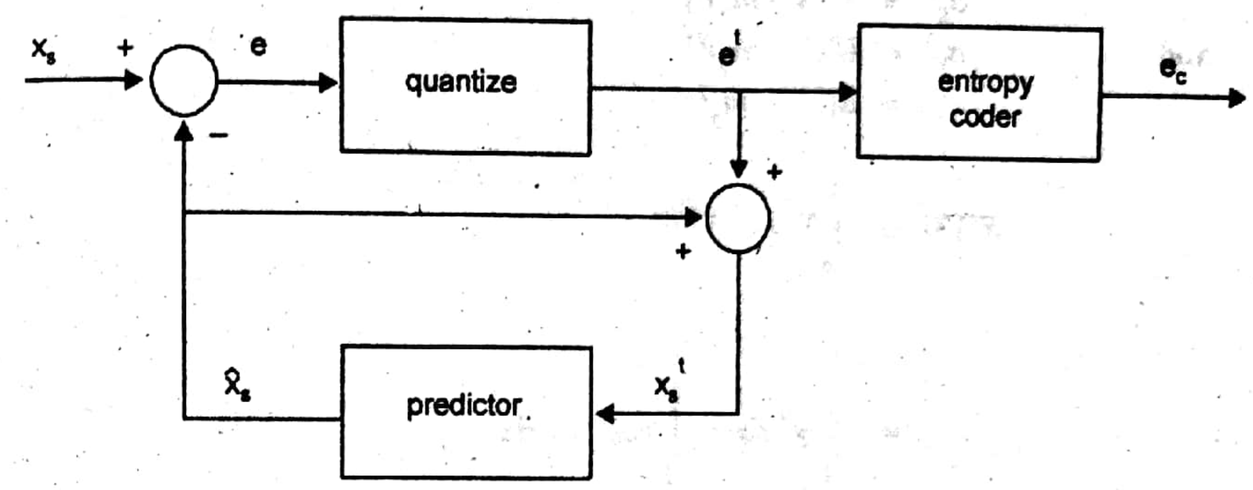

Using optical fiber communication is a major change in the history of communication , take United States, Japan, Britain, France for example, more than 20 countries have announced that it would no longer construct cable communication line, and committed to the development of optical fiber communication. China optical fiber communication has entered the practical stage.

Q.3. (*b*) Let Y = cos (πX), where

$$f_X(x) = \begin{cases} 1, & -\frac{1}{2} < x < \frac{1}{2} \\ 0, & otherwise \end{cases}$$

Find $E[Y]$ and σ_y^2 **(5)**

Ans. Given

$$Y = \cos(\pi X)$$

$$f_X(x) = \begin{cases} 1 & -\frac{1}{2} < x < \frac{1}{2} \\ 0 & otherwise \end{cases}$$

(*i*) $$E[Y] = \int_{-\infty}^{\infty} y f_X(x)dx$$

$$= \int_{-\frac{1}{2}}^{\frac{1}{2}} \cos \pi x \, dx = \left[\frac{\sin \pi x}{\pi}\right]_{-\frac{1}{2}}^{\frac{1}{2}}$$

$$= \frac{1}{\pi}\left[\sin\frac{\pi}{2} - \sin\left(-\frac{\pi}{2}\right)\right]$$

$$= \frac{1}{\pi}[1+1] = \frac{2}{\pi}$$

and

$$\sigma_X^2 = E[(X-m_x)^2]$$
$$\sigma_Y^2 = E[(Y-m_y)^2]$$
$$= E[Y^2] - m_y^2 \quad ...(i)$$

$$E[Y^2] = \int_{-\infty}^{\infty} y^2 f_X(x)dx$$

$$= \int_{-\frac{1}{2}}^{\frac{1}{2}} y^2 \, dx = \int_{-\frac{1}{2}}^{\frac{1}{2}} \cos^2 \pi x \, dx$$

$$= \int_{-\frac{1}{2}}^{\frac{1}{2}} \left(\frac{1+\cos 2\pi x}{2}\right)dx$$

$$= \frac{1}{2}\left[x + \frac{\sin 2\pi x}{2\pi}\right]_{-\frac{1}{2}}^{\frac{1}{2}}$$

$$= \frac{1}{2}\left[\frac{1}{2} - \left(-\frac{1}{2}\right)\right] = \frac{1}{2}$$

Hence now $\sigma_Y^2 = E[Y^2] - m_y^2$

$$= \frac{1}{2} - \frac{2}{\pi} = \frac{\pi - 4}{2\pi}$$

Q.4.(a) Let X and Y be the two jointly continuous random variables with joint *PDF*.

$$f_{XY}(x,y) = \begin{cases} x + cy^2 & 0 \le x \le 1, 0 \le y \le 1 \\ 0 & \text{otherwise} \end{cases}$$

Find

(a) the constant c **(b) $P\left(0 \le X \le \frac{1}{2}, 0 \le Y \le \frac{1}{2}\right)$** **(6)**

Ans. Since the given function is a joint pdf so the total area under the given two random variables will be unity.

So $$\int_{-\infty}^{\infty}\int_{\infty}^{\infty} f_{XY}(x,y)dx\,dy = 1$$

$$\Rightarrow \int_0^1\int_0^1 (x + cy^2)\,dx\,dy = 1$$

$$\Rightarrow \int_0^1 \left[xy + \frac{cy^3}{3}\right]_0^1 dx = 1$$

$$\Rightarrow \int_0^1 \left(x + \frac{c}{3}\right)dx = 1$$

$$\left[\frac{x^2}{2} + \frac{c}{3}x\right]_0^1 = 1$$

$$\left(\frac{1}{2} + \frac{c}{3}\right) = 1$$

$$\Rightarrow \frac{c}{3} = 1 - \frac{1}{2}$$

or $$c = \frac{3}{2}$$

(b) $P(0 \le X \le \frac{1}{2}, 0 \le Y \le \frac{1}{2})$

$$= \int_0^{\frac{1}{2}}\int_0^{\frac{1}{2}} (x + \frac{3}{2}y^2)\,dxdy$$

$$= \int_0^{\frac{1}{2}} \left[xy + \frac{3}{2}\frac{y^3}{3}\right]_0^{\frac{1}{2}} dx$$

$$= \int_0^{\frac{1}{2}} \left(\frac{x}{2} + \frac{1}{16}\right) dx$$

$$= \left[\frac{x^2}{4} + \frac{1}{16}x\right]_0^{\frac{1}{2}}$$

$$= \frac{1}{16} + \frac{1}{32} = \frac{3}{32}$$

Q.4. (b) What is Auto-correlation and its relation with power spectral density? (4)

Ans. Power Spectral Densfty (PSD) is the frequency response of a random or periodic signal. It tells us where the average power is distributed as a function of frequency.

• The PSD is deterministic, and for certain types of random signals is independent of time. This is useful because the Fourier transform of a random time signal is itself random, and therefore of little use calculating transfer relationships (i.e., finding the output of a filter when the input is random).

• The PSD of a random time signal x(t) can be expressed in one of two ways that are equivalent to each other

1. The PSD is the average of the Fourier transform magnitude squared, over a large time interval

$$S_x(f) = \lim_{T \to \infty} E\left\{\frac{1}{2T}\left|\int_{-T}^{T} x(t) e^{-j2\pi ft} dt\right|^2\right\}$$

2. The PSD is the Fourier transform of the auto-correlation function

$$S_x(f) = \int_{-T}^{T} R_x(\tau) e^{-j2\pi ft} dt$$

$$R_x(\tau) = E\{x(t)x^*(t+\tau)\}$$

• The power can be calculated from a random signal over a given band of frequencies as follows:

1. Total Power in x(t):

$$P = \int_{-\infty}^{\infty} S_x(f)\, df = R_x(0)$$

2. Power in x(t) in range f_1 - f_2:

$$P_{12} = \int_{f_1}^{f_2} S_x(f)\, df = R_x(0)$$

The signal has to be stationary, which means that statistics do not change as a function of time.

• If a random signal x(t) is passed through a time-invariant filter with frequency response H(f), the resulting signal y(t) has a PSD as follows:

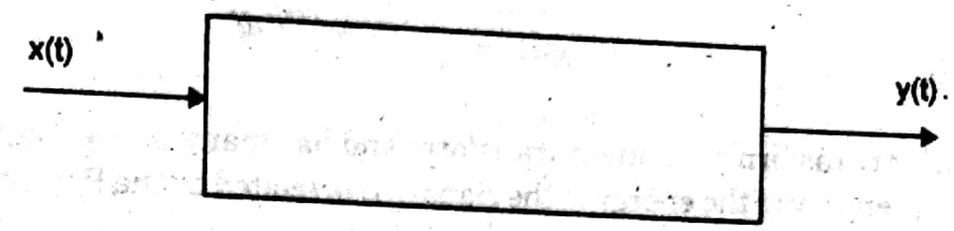

$$S_y(f) = S_x(f)\,|H(f)|^2$$

Fourier transform (FT) of a real signal $g(t)$ is given by

$$G(w) = FT(g(t)) = \int_{-\infty}^{\infty} g(t) e^{-j\omega t} dt$$

where $e^{-j\omega t} = \cos\omega t + j\sin\omega t$ is the complex exponential.

The Fourier transform G(ω) exists if $g(t)$ satisfies the following Dirichlet conditions $g(t)$ is absolutely integrable, that is,

$$\int_{-\infty}^{\infty} |g(t)|\, dt < \infty$$

$g(t)$ has only a finite number of discontinuities in any finite interval.

$g(t)$ has only finite number of maxima and minima within any finite interval.

The signal $g(t)$ can be obtained from G(ω) by the inverse Fourier transform (IFT) as follows:

$$g(t) = IFT(G(\omega)) = \frac{1}{2\pi}\int_{-\infty}^{\infty} G(\omega) e^{j\omega t} d\omega$$

The existence of the inverse Fourier transform implies that we can represent a function $g(t)$ as a superposition of continuum of complex sinusoids. The Fourier transform $G(\omega)$ is the strength of the sinusoids of frequency ω present in the signal. If $g(t)$ is a voltage signal measured in *volt*, has the unit of *volt / radian*. The function G(ω) is also called the spectrum of g(t).

We can define the Fourier transform also in terms of the frequency variable $f = \frac{\omega}{2\pi}$

In this case, we can define the Fourier transform and the inverse Fourier transform as follows:

$$G(f) = \int_{-\infty}^{\infty} g(t)e^{-j2\pi ft}dt$$

and

$$g(t) = \int_{-\infty}^{\infty} G(f)e^{j2\pi ft}df$$

The Fourier transform is a linear transform and has many interesting properties. Particularly, the energy of the energy of the signal $f(t)$ is related by the Parseval's theorem

$$\int_{-T}^{T} g^2(t)dt = \int_{-\infty}^{\infty} |G(\omega)|^2 d\omega$$

END TERM EXAMINATION [DEC. 2017]
FIFTH SEMESTER [B.TECH.]
DIGITAL COMMUNICATION
[ETEC–303]

Time : 3 hrs. **M.M. : 75**

Note: *Attempt any five questions including Q.No. 1 which is compulsory. Select one question from each unit.*

Q.1. Attempt all:

Q.1. (*a*) A *PCM* system uses a uniform quantizer followed by a 7-bit binary encoder. The bit rate of the system is 50 *Mb/s* for the satisfactory operation of the system. Calculate the maximum message bandwidth. **(5)**

Ans.

$$\text{no of bits} = 7 \text{ ; bit rate} = 50 \text{ MbPS}$$

$$\text{Here } n = 7$$

$$r = 50 \times 10^6 \text{ bits/sec}$$

$$r = nfs$$

$$fs = 2f_m$$

$$50 \times 10^6 = 7(2f_m)$$

$$f_m = 3.57 \times 10^6 \text{ Hz} = 3.57 \text{ MHz.}$$

Q.1. (*b*) Let z be a random variable with probability density $f_z(z) = 0.5$ in the range $-1 \le z \le 1$. Let the random variable $x = z$ and the random variable $y = z^2$, Obviously x and y are not independent since $x^2 = y$. Show nonetheless, the x and y are uncorrelated. **(5)**

Ans. $f_Z(z) = 0.5$

Random variables $x = z$ and $y = z^2$

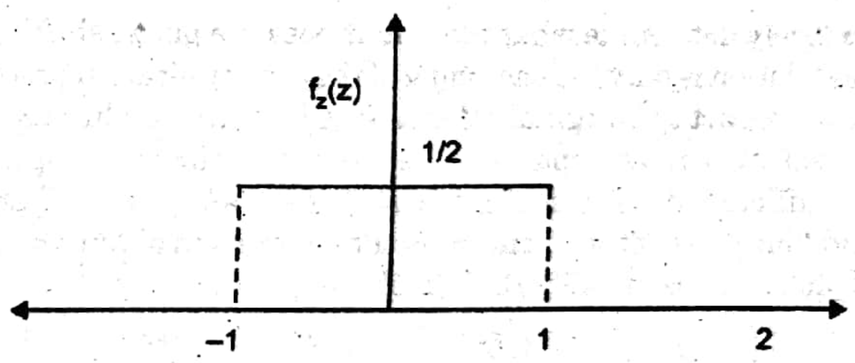

$$R_{XX}(\tau) = \int_{-\infty}^{\infty} x(t)x(t-\tau)dt$$

it the two random variables x, y are said to independent then correlation of x & y comes out to be zero.

e.g.,

$$R_{XY}(\tau) = 0$$

$$R_{XY}(\tau) = \int_{-\infty}^{\infty}\int_{-\infty}^{\infty} x(t)\,y(t-\tau)f_{XY}\,dx\,dy$$

or
$$R^2(\tau) = \int_{-1}^{1} xy\, f_z(z)\, dz$$

$$= \int_{-1}^{1} z(z^2) f_z(z)\, dz$$

$$= \int_{-1}^{1} z^3 (0.5)\, dz$$

$$= \left[\frac{z^4}{4} \cdot \frac{1}{2}\right]_{-1}^{1}$$

$$= \left[\frac{z^4}{8}\right]_{-1}^{1} = \frac{1}{8} - \frac{1}{8} = 0$$

Hence the auto-correlation comes out to be zero, which shown that x & y both are independent of each other.

Q.1. (c) Explain QPSK and mention its merits also. **(5)**

Ans. Quadrature phase shift keying (QPSK) is another modulation technique, and it's a particularly interesting one because it actually transmits two bits per symbol. In other words, a QPSK symbol doesn't represent 0 or 1—it represents 00, 01, 10, or 11.

This two-bits-per-symbol performance is possible because the carrier variations are not limited to two states. In ASK, for example, the carrier amplitude is either amplitude option A (representing a 1) or amplitude option B (representing a 0). In QPSK, the carrier varies in terms of phase, not frequency, and there are *four* possible phase shifts.

We can intuitively determine what these four possible phase shifts should be: First we recall that modulation is only the beginning of the communication process; the receiver needs to be able to extract the original information from the modulated signal. Next, it makes sense to seek maximum separation between the four phase options, so that the receiver has less difficulty distinguishing one state from another. We have 360° of phase to work with and four phase states, and thus the separation should be 360°/4 = 90°. So our four QPSK phase shifts are 45°, 135°, 225°, and 315°.

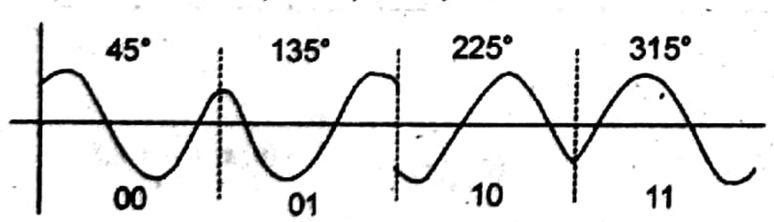

(Note: The phase-shift-to-digital-data correspondence shown above is a logical though arbitrary choice; as long as the transmitter and receiver agree to interpret phase shifts in the same way, different correspondence schemes can be used.)

Advantages of QPSK:

1. Very good noise immunity.

2. For the same bit error rate, the bandwidth required by QPSK is reduced to half as compared to BPSK.

3. Because of reduced bandwidth, the information transmission rate of QPSK is higher.

4. Variation in QPSK amplitude is not much .Hence carrier power almost remains constant.

5. Baud rate is half the bit rate therefore more effective utilization of the available bandwidth of the transmission channel.

6. Low error probability.

Due to these advantages the QPSK is used for very high bit rate data transmission.

Q.1. (d) What is Inter symbol Interference and how it can be eliminated? **(5)**

Ans. ISI: Intersymbol Interference

In telecommunication, **intersymbol interference (ISI)** is a form of distortion of a signal in which one symbol interferes with subsequent symbols. This is an unwanted phenomenon as the previous symbols have similar effect as noise, thus making the communication less reliable. The spreading of the pulse beyond its allotted time interval causes it to interfere with neighboring pulses. ISI is usually caused by multipath propagation or the inherent linear or non-linear frequency response of a communication channel causing successive symbols to "blur" together.

The presence of ISI in the system introduces errors in the decision device at the receiver output. Therefore, in the design of the transmitting and receiving filters, the objective is to minimize the effects of ISI, and thereby deliver the digital data to its destination with the smallest error rate possible.

Countering ISI

There are several techniques in telecommunication and data storage that try to work around the problem of intersymbol interference.

- Design systems such that the impulse response is short enough that very little energy from one symbol smears into the next symbol.

Consecutive raised-cosine impulses, demonstrating zero-ISI property

- Separate symbols in time with guard periods.
- Apply an equalizer at the receiver, that, broadly speaking, attempts to undo the effect of the channel by applying an inverse filter.
- Apply a sequence detector at the receiver, that attempts to estimate the sequence of transmitted symbols using the Viterbi algorithm.

Q.1. (e) Explain Manchester code and Alternate Mark Inversion Code. **(5)**

Ans. Manchester Encoding

Manchester encoding (first published in 1949) is a synchronous clock encoding technique used by the physical layer to encode the clock and data of a synchronous bit stream. In this technique, the actual binary data to be transmitted over the cable are not sent as a sequence of logic 1's and 0's (known technically as Non Return to Zero (NRZ)). Instead, the bits are translated into a slightly different format that has a number of advantages over using straight binary encoding (i.e. NRZ).

In the Manchester encoding shown, a logic 0 is indicated by a 0 to 1 transition at the centre of the bit and a logic 1 is indicated by a 1 to 0 transition at the centre of the bit. Note that signal transitions do not always occur at the 'bit boundaries' (the division between one bit and another), but that there is always a transition at the centre of each bit.

The Manchester encoding rules are summarised below:

Original Data	Value Sent
Logic 0	0 to 1 (upward transition at bit centre)
Logic 1	1 to 0 (downward transition at bit centre)

Note that in some cases you will see the encoding reversed, with 0 being represented as a 0 to 1 transition. The two definitions have co-existed for many years. The Ethernet Blue-Book and IEEE standards (10 Mbps) describe the method in whih a Logic 0 is sent as 0 to 1 transition, and a Logic 1 as a one to zero transition (where a zero is represented by a less negative voltage on the cable). Note that because many physical layers employ an inverting line driver to convert the binary digits into an electrical signal, the signal on the wire is the exact opposite of that output by the encoder. Differential physical layer transmission, (e.g. 10BT) does not suffer this inversion.

The following diagram shows a typical Manchester encoded signal with the corresponding binary representation of the data (1,1,0,1,0,0) being sent.

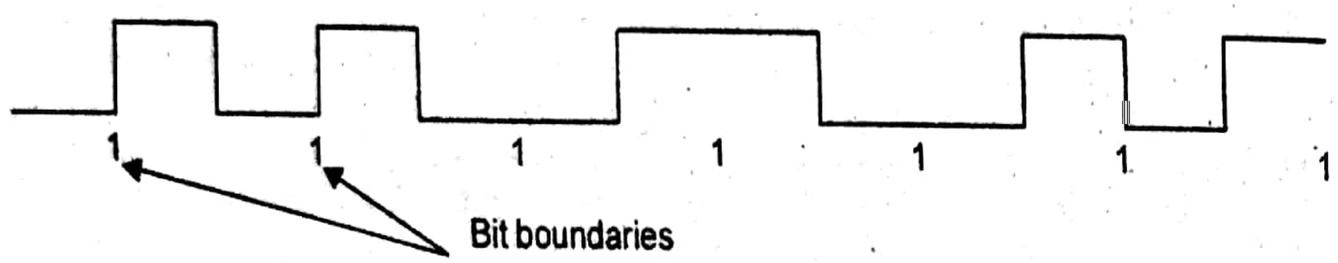

The waveform for a Manchester encoded bit stream carrying the sequence of bits 110100.

AMI (Alternate Mark Inversion)

AMI (Alternate Mark Inversion) is a synchronous clock encoding technique which uses bipolar pulses to represent logical 1 values. It is therefore a three level system. A logical 0 is represented by no symbol, and a logical 1 by pulses of alternating polarity. The alternating coding prevents the build-up of a d.c. voltage level down the cable. This is considered an advantage since the cable may be used to carry a small d.c. current to power intermediate equipment such as line repeaters.

AMI coding was used extensively in first generation PCM networks, but suffers the drawback that a long run of 0's produces no transitions in the data stream (and therefore does not contain sufficient transitions to guarantee lock of a DPLL). Successful transmission therefore relies on the user not wishing to send long runs of 0's and this type of encoding is not therefore transparent to the sequence of bits being sent.

The HDB3 encoding scheme is one of many which have been developed to provide regular transitions irrespective of the pattern of data being carried.

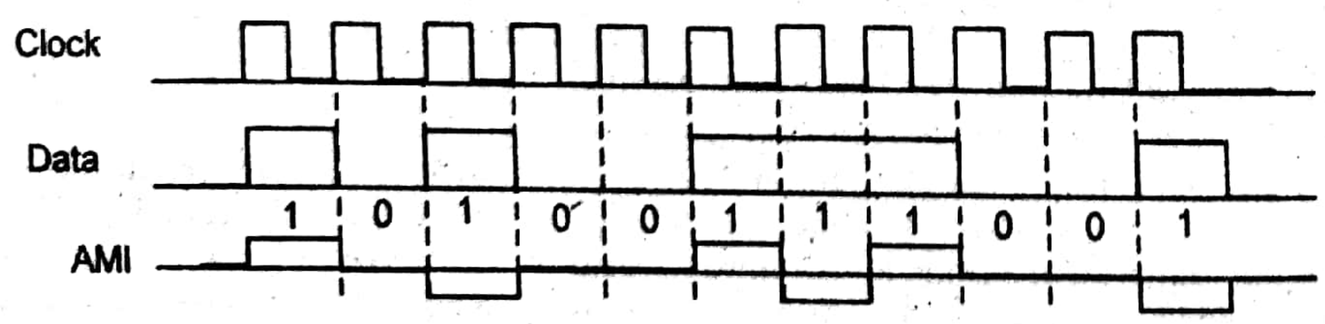

UNIT–I

Q.2. Explain Sampling theorem and different types of sampling in detail. A single $m(t)$ is band limited to 20 kHz is sampled at a frequency 'f_s' kHz. An ideal LPF having cutoff frequency 37 kHz is used to reconstruct $m(t)$. Determine the minimum value of 'f_s' required to reconstruct $m(t)$ without distortion. (12.5)

Ans. Sampling is a process if converting the analog continous signal to the discrete signal.

Sampling rate is said to be the sampling frequency (fs) & for better reconstruction of signal from its sampled version is taken to be two times of that of message signal frequency.

$$f_s \geq 2fm$$

These are the following types of the sampling -

(*i*) Instantaneous Sampling

(*ii*) Natural Sampling

(*iii*) Flat-top Sampling.

As per the Question, $f_m = 20$ KHz

Sampling frequency required = 40 KHz

The ideal low pass filter is having a cut-off frequeny of 37 KHz is used.

To reconstruct the message signal m(t) without distortion, the minimum frequency required,

$$f = f_s + f_c$$
$$= 40 \text{ KHz} + 37 = 77 \text{ KHz}$$

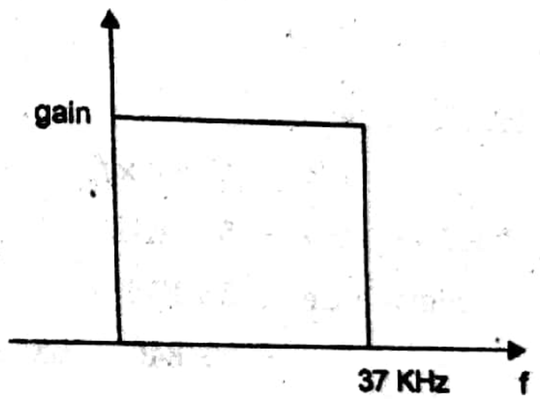

Q.3. Give advantage and disadvantages of PCM. Bandwidth of the input to a pulse code modulator is restricted to 4 kHz. The signal varies from –3.8 V to +3.8V and has the average power of 30 mW. The required SNR is 20 dB. The modulator produces binary output. Assume uniform quantization. (12.5)

(*a*) Calculate the no. of bits required per sample.

(*b*) Outputs of 30 such PCM coders are time-multiplexed. What is the minimum required transmission bandwidth for the multiplexed signal?

Ans. Advantage of PCM:

(*i*) It converts the analog signal to the digital signal.

(*ii*) Signal to noise ratio is much better than that of the anolog modulation methods

Disadvantage:

(*i*) It does not ulilizes the bandwidth efficiently.

(*ii*) It requires the high sampling rate and transmission bandwidth is more.

Here as per the given conditions of the question

$$f_m = 4\text{KHz}$$

$$\text{Signal range} = 3.8 - (-3.8) = 7.6 \text{ Volts}$$

$$\text{Average Power} = 30 \text{ mW}$$

$$\text{Required signal to noise ratio (SNR)} = 20 \text{ dB}$$

$$\left(\frac{S}{N}\right)_{dB} = 10\log_{10}\left(\frac{S}{N}\right) = 20 \text{ dB}$$

so,

$$\left(\frac{S}{N}\right) = 100 = \frac{3P(2^{2v})}{X_{\max}^2}$$

as per the given values:

$$X_{\max} = 3.8 \text{ v and } P = 30 \times 10^{-3} \text{ Watt}$$

$$\text{So } 100 = \frac{3 \times 30 \times 10^{-3} \times 2^{2V}}{(3.8)^2}$$

After solving it out

$$V = 6.98 \text{ bits} \simeq 7 \text{ bits}$$

Since $f_m = 4$ kHz

Transmission bandwidth B.W $\geq nfm$

$$BW = 30 \times n \times f_m$$

$$= (30 \times 7 \times 4) \text{ KHz} = 840 \text{ KHz}$$

$$\text{Signal rate} = 2 \times \text{BW}$$

$$= 2 \times 840 = 1680 \text{ bits/sec.}$$

UNIT–II

Q.4. A random communication signal has PDF = $P_X(x) = ae^{-b|x|}$ for all x, $-\infty < x < +\infty$ and $a = 3$. **(12.5)**

Find:

(*a*) Relationship between *a* and *b*.

(*b*) CDF

(*c*) Probability that the random variable *X* lies between –1 and +2.

Ans. (a) The given *PDF* $P_X(x) = ae^{-b|x|}$

for all x, $\infty < X < \infty$ and $a = 3$

Since

$$\int_{-\infty}^{\infty} P_X(x)\,dx = 1$$

$$= \int_{-\infty}^{\infty} a e^{bx}\,dx$$

$$= \int_{-\infty}^{0} a e^{bx}\,dx + \int_{0}^{\infty} ae^{-bx}\,dx = 1$$

$$= \left.\frac{ae^{bx}}{b}\right|_{-\infty}^{0} + \left.\frac{ae^{-bx}}{-b}\right|_{0}^{\infty}$$

$$\frac{a}{b}(1) + \left(-\frac{a}{b}\right)(0-1)$$

$$\frac{a}{b} + \frac{a}{b} = 1$$

$$\frac{2a}{b} = 1 \text{ or } a = \frac{b}{2}$$

When

$$a = 3b = 6$$

(*b*)

$$CDF = F_X(x) = P(X \leq x)$$

$$= \int_{-\infty}^{x} ae^{-b|x|}\,dx$$

$$= \int_{-\infty}^{0} ae^{-b(-x)}\,dx + \int_{0}^{x} ae^{-bx}\,dx$$

$$= \left.\frac{a}{b}e^{bx}\right|_{-\infty}^{0} + \left.\left(-\frac{a}{b}\right)e^{-bx}\right|_{0}^{x}$$

$$= \frac{a}{b}(1-0) + \left(-\frac{a}{b}\right)(e^{-bx} - 1)$$

$$= \frac{a}{b} + \left(-\frac{a}{b}\right)e^{-bx} + \frac{a}{b} = -\frac{a}{b}e^{-bx} + \frac{2a}{b}$$

(c) $P(-1 \le X \le 2)$

$$\int_{-1}^{2} ae^{-b|x|}dx = \int_{-1}^{0} ae^{-b|-x|}dx + \int_{0}^{1} ae^{-bx}dx$$

$$= \frac{a}{b}\left(e^{bx}\right)_{-1}^{0} + \left(-\frac{a}{b}\right)e^{-bx}\Big|_{0}^{1}$$

$$= \frac{a}{b}\left(1-e^{bx}\right) - \frac{a}{b}\left(e^{-b}-1\right)$$

$$= \frac{a}{b} - \frac{a}{b}e^{-b} - \frac{a}{b}e^{-b} + \frac{a}{b}$$

$$\frac{2a}{b} - \frac{2a}{b}e^{-b} = \frac{2a}{b}\left(1-e^{-b}\right)$$

Q.5. Given two random processes $X(t)$ and $Y(t)$ as

$X(t) = Z_1(t) + 3Z_2(t-\pi)$

$Y(t) = Z_2(t-\tau) + Z_1(t-\tau)$

Here $Z_1(t)$ and $Z_2(t)$ are independent which noise processes each with a variance equal to 0.5. Determine: (12.5)

(a) Auto correleration function of $X(t)$ and $Y(t)$.

(b) Cross correlation function of $X(t)$ and $Y(t)$.

Ans. Given $X(t)$ and $Y(t)$ be two random

Process

$X(t) = Z_1(t) + 3z_2(t-\Pi)$

$Y(t) = Z_1(t-\tau) + Z_2(t-\tau)$

The variance of the given processes is given by: 0.5

The cross correlation of the two processes $X(t)$ & $Y(t)$ is given by

$$R_{XY}(t_1,t_2) = \overline{X(t_1)Y(t_2)}$$

& if $X(t)$ and $Y(t)$ are jointly stationary then cross-correlation function becomes

$$R_{XY}(t_1,t_2) = R_{XY}(\tau)$$

Here $\tau = t_2 - t_1$

Also the two process are said to be uncorrelated if

The auto-correlation of two functions $X_1(t)$ and $X_2(t)$ can be found by

$$R_X(t_1,t_2) = \overline{X(t_1)X(t_2)}$$

$$= \int_{-\infty}^{\infty}\int_{-\infty}^{\infty} x_1x_2 f_X(x_1,x_2)dx_1dx_2$$

Hence the Auto-correclation of $X(t)$ and $Y(t)$ can be obtained by:

$$R_{XY}(t_1t_2) = \overline{X(t)Y(t)}$$

$$= \overline{(z_1(t)+3z_2(t-\pi))[z_2(t-\tau)+z_1(t-\tau)]}$$

$$z_1(t)\,z_2(t-\tau) + z_1(t)\,z_1(t-\tau)$$
$$+ 3z_2(t-\pi)z_2(t-\tau) + 3z_2(t-\pi)\,z_1(t-\tau)$$

Taking the mean value of each component seperately we can find the auto-correlation of $X(t)$ & $Y(t)$.

UNIT–III

Q.6. Discuss the design and property of matched filter. (12.5)

Ans. Matched Filters

Introduction: When the signal of interest is known and the goal is to detect its presence, a matched filter is used to maximize the S/N ratio of the detection process.

Basic principles:

Background noise is assumed to be white noise or band-limited white noise with the noise bandwidth encompasses the entire signal spectrum.

The signal of interest is deterministic.

Background noise is assumed to be additive: Input = signal + noise

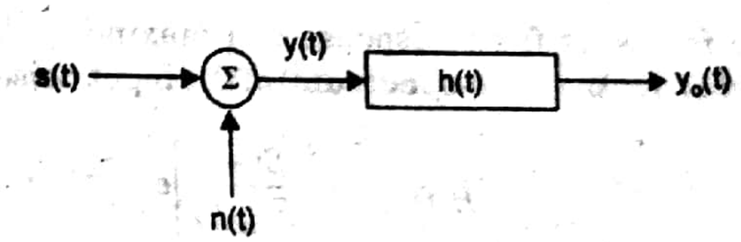

If the frequency response of the filter matches the frequency spectrum of the signal, the S/N ratio is maximized.

At frequencies where the signal is strong, the system gain should also be high to enhance the difference between the signal and the noise.

At frequencies where the signal is weak, the system gain should also be low to de-emphasize the noise energy at these frequencies.

At frequencies where the signal energy is negligible, the system gain should be zero to filter out the out-of-band noise.

Because of the non-uniform frequency response, the filter output is distorted.

This technique is ideal for signal detection since in this case only the signal energy (with respect to noise), not the actual shape, is.

This technique is not useful if the shape of the signal waveform is unknown.

Mathematical details:

From linear system theory the output is obtained from the convolution integral:

$$y_o(t) = \int_{-\infty}^{\infty} h(t-\tau)y(\tau)d\tau = \int_{-\infty}^{\infty} h(\tau)y(t-\tau)d\tau$$

$$= \int_{-\infty}^{\infty} h(\tau)s(t-\tau)d\tau + \int_{-\infty}^{\infty} h(\tau)n(t-\tau)d\tau = s_o(t) + n_o(t)$$

For a white noise input with unity magnitude the S/N ratio at $t = T$ is:

$$(S/N)^2\Big|_T = \frac{s_o^2(T)}{E[n_o^2(T)]}$$

$$= \frac{\left[\int_{-\infty}^{\infty} h(\tau)s(T-\tau)d\tau\right]^2}{\int_{-\infty}^{\infty} h^2(\tau)d\tau} \le \frac{\left[\int_{-\infty}^{\infty} h^2(\tau)d\tau\right] \times \left[\int_{-\infty}^{\infty} s^2(T-\tau)d\tau\right]}{\int_{-\infty}^{\infty} h^2(\tau)d\tau}$$

Note: The inequality is the direct result of the Schwarz inequality. The equality holds if the following is true:

$$\int_{-\infty}^{\infty} h^2(\tau)d\tau = \int_{-\infty}^{\infty} s^2(T-\tau)d\tau \text{, which means: } (S/N)^2\Big|_{T,\max} = \int_{-\infty}^{\infty} s^2(T-\tau)d\tau.$$

In general, the following filter response can maximize the S/N ratio if the autocorrelation function (or the **auto-spectrum**) of the input noise is known:

$$H(f) = \alpha\left[\frac{S(-f)}{S_{nn}(f)}\right]e^{-j2\pi fT}$$

Where α is an arbitary constant, T is the **observation period**, and $S_{nn}(f)$ is the autospectrum of the noise process.

For white noise process, the impulse response of the matched filter is:

$$h(t) = s(T-t) \text{ for } t \ge 0$$

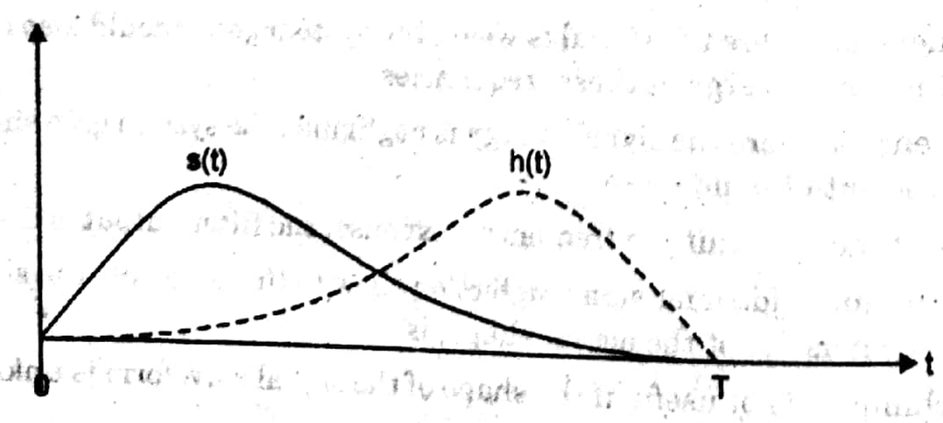

Examples:

White noise process:

$$s(t) = e^{-t} \text{ for } t \ge 0 \Rightarrow S(f) = \frac{1}{1+j2\pi f} \Rightarrow$$

$$H(f) = \frac{e^{-j2\pi fT}}{1+j2\pi f} \Rightarrow h(t) = \int_0^{\infty} \frac{e^{-j2\pi f(T-t)}}{1+j2\pi f}df = \begin{cases} e^{-(T-t)} & \text{for } t \le T \\ 0 & \text{otherwise} \end{cases}$$

Realistic low-pass noise:

$$y(t) = \underbrace{A\cos 2\pi f_c t}_{s(t)} + n(t) \quad \text{for } 0 \le t \le T$$

$$\Rightarrow S(f) = F\{A\cos 2\pi f_c t\} = \frac{A}{2}[\delta(f+f_c) + \delta(f-f_c)]$$

$$E[n(t)] = 0, \quad E[n(t)n(t+\tau)] = e^{-|\tau|}$$

$$\Rightarrow S_{nn}(f) = F\{e^{-|\tau|}\} = \frac{2}{1+4\pi^2 f^2} \Rightarrow h = F^{-1}\left\{\frac{S^*(f)}{S_{nn}(f)}e^{j2\pi fT}\right\}$$

$$= \frac{\alpha A}{1+4\pi^2 f_c^2}\left[e^{-2\pi f(T-t)} + e^{2\pi f(T-t)}\right] = \underbrace{\frac{\alpha A}{1+4\pi^2 f_c^2}}_{\text{constant}}\cos 2\pi f_c(T-t)$$

Q.7. Explain the concept of Eye Diagram. **(12.5)**

Ans. An eye diagram is a common indicator of the quality of signals in high-speed digital transmissions. An oscilloscope generates an eye diagram by overlaying sweeps of different segments of a long data stream driven by a master clock. The triggering edge may be positive or negative, but the displayed pulse that appears after a delay period may go either way; there is no way of knowing beforehand the value of an arbitrary bit. Therefore, when many such transitions have been overlaid, positive and negative pulses are superimposed on each other. Overlaying many bits produces an eye diagram, so called because the resulting image looks like the opening of an eye.

In an ideal world, eye diagrams would look like rectangular boxes. In reality, communications are imperfect, so the transitions do not line perfectly on top of each other, and an eye-shaped pattern results. On an oscilloscope, the shape of an eye diagram will depend upon various types of triggering signals, such as clock triggers, divided clock triggers, and pattern triggers. Differences in timing and amplitude from bit to bit cause the eye opening to shrink.

Interpreting an eye diagram :

A properly constructed eye should contain every possible bit sequence from simple alternate 1's and 0's to isolated 1's after long runs of 0's, and all other patterns that

may show up weaknesses in the design. Eye diagrams usually include voltage and time samples of the data acquired at some sample rate below the data rate. In Figure the bit sequences 011, 001, 100, and 110 are superimposed over one another to obtain the final eye diagram.

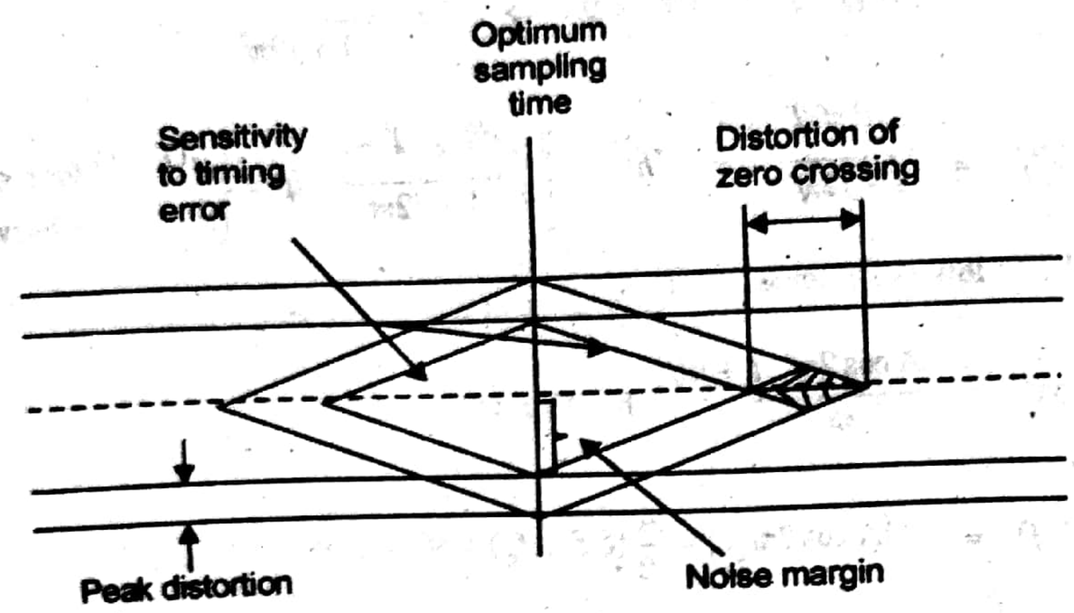

UNIT–IV

Q.8. Differeniate the following digital modulation schemes: (12.5)

(a) ASK

(b) FSK

(c) PSK

Ans. Amplitude Shift Keying (ASK) is a type of Amplitude Modulation which represents the binary data in the form of variations in the amplitude of a signal.

Any modulated signal has a high frequency carrier. The binary signal when ASK modulated, gives a zero value for Low input while it gives the carrier output for High input.

The following figure represents ASK modulated waveform along with its input.

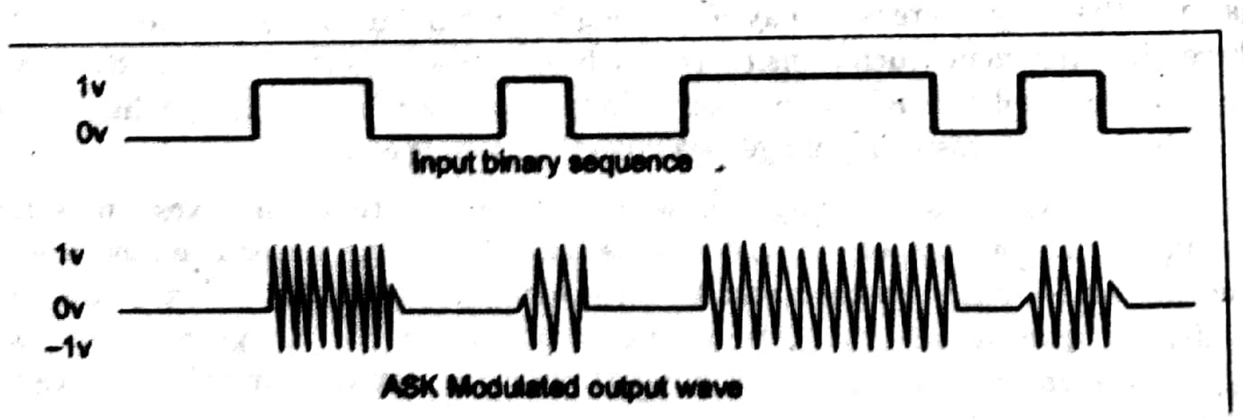

To find the process of obtaining this ASK modulated wave, let us learn about the working of the ASK modulator.

ASK Modulator :

The ASK modulator block diagram comprises of the carrier signal generator, the binary sequence from the message signal and the band-limited filter. Following is the block diagram of the ASK Modulator.

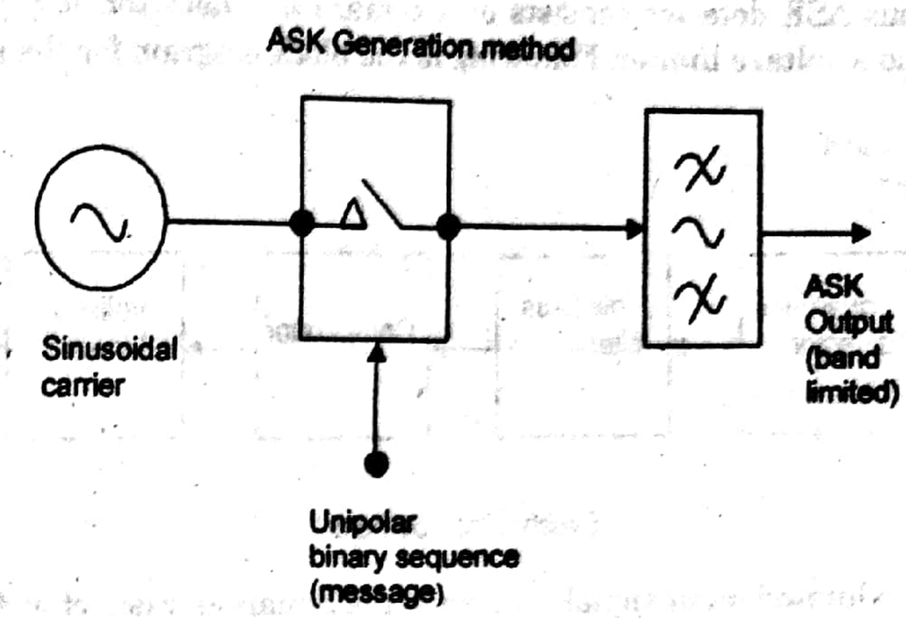

The carrier generator, sends a continuous high-frequency carrier. The binary sequence from the message signal makes the unipolar input to be either High or Low. The high signal closes the switch, allowing a carrier wave. Hence, the output will be the carrier signal at high input. When there is low input, the switch opens, allowing no voltage to appear. Hence, the output will be low.

The band-limiting filter, shapes the pulse depending upon the amplitude and phase characteristics of the band-limiting filter or the pulse-shaping filter.

ASK Demodulator

There are two types of ASK Demodulation techniques. They are

Asynchronous ASK Demodulation/detection

Synchronous ASK Demodulation/detection

The clock frequency at the transmitter when matches with the clock frequency at the receiver, it is known as a Synchronous method, as the frequency gets synchronized. Otherwise, it is known as Asynchronous.

Asynchronous ASK Demodulator

The Asynchronous ASK detector consists of a half-wave rectifier, a low pass filter, and a comparator. Following is the block diagram for the same.

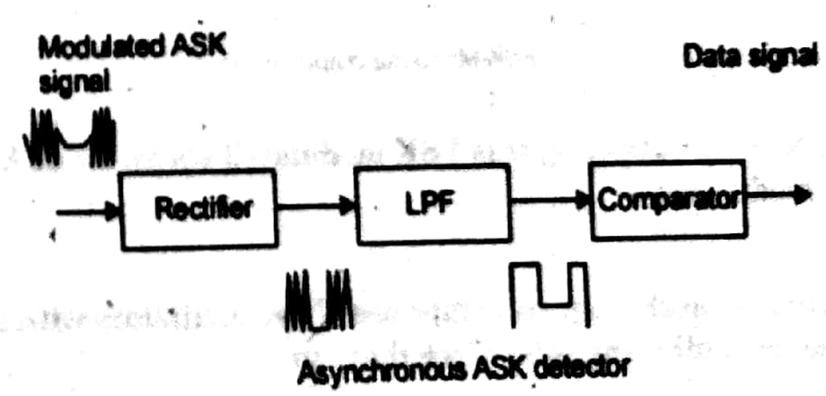

The modulated ASK signal is given to the half-wave rectifier, which delivers a positive half output. The low pass filter suppresses the higher frequencies and gives an envelope detected output from which the comparator delivers a digital output.

Synchronous ASK Demodulator

Synchronous ASK detector consists of a Square law detector, low pass filter, a comparator, and a voltage limiter. Following is the block diagram for the same.

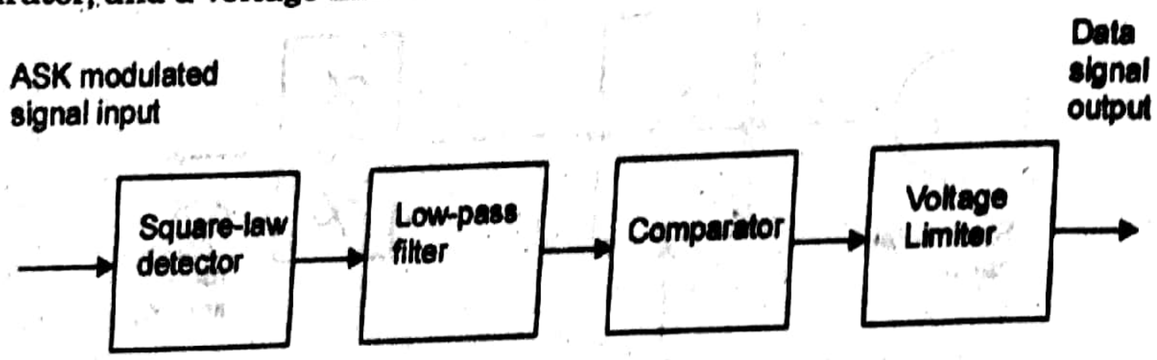

Synchronous detector

The ASK modulated input signal is given to the Square law detector. A square law detector is one whose output voltage is proportional to the square of the amplitude modulated input voltage. The low pass filter minimizes the higher frequencies. The comparator and the voltage limiter help to get a clean digital output.

Frequency Shift Keying (FSK) is the digital modulation technique in which the frequency of the carrier signal varies according to the digital signal changes. FSK is a scheme of frequency modulation.

The output of a FSK modulated wave is high in frequency for a binary High input and is low in frequency for a binary Low input. The binary 1s and 0s are called Mark and Space frequencies.

The following image is the diagrammatic representation of FSK modulated waveform along with its input.

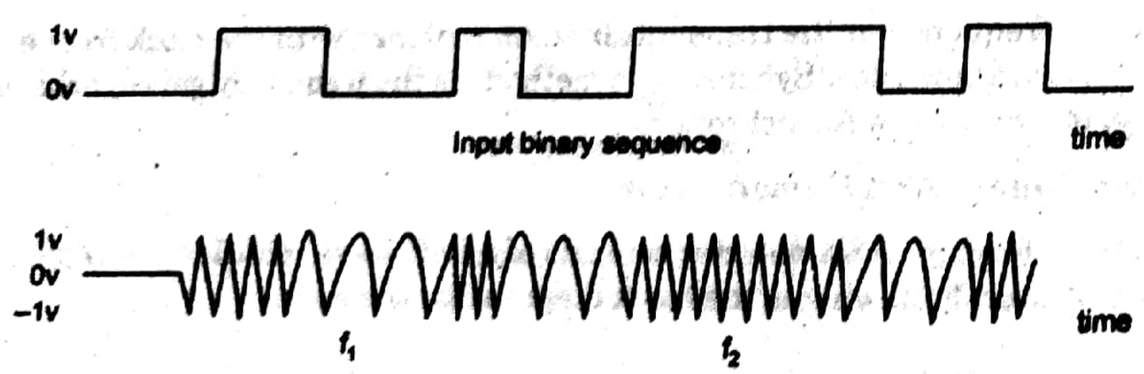

FSK Modulate output wave

To find the process of obtaining this FSK modulated wave, let us know about the working of a FSK modulator.

FSK Modulator

The FSK modulator block diagram comprises of two oscillators with a clock and the input binary sequence. Following is its block diagram.

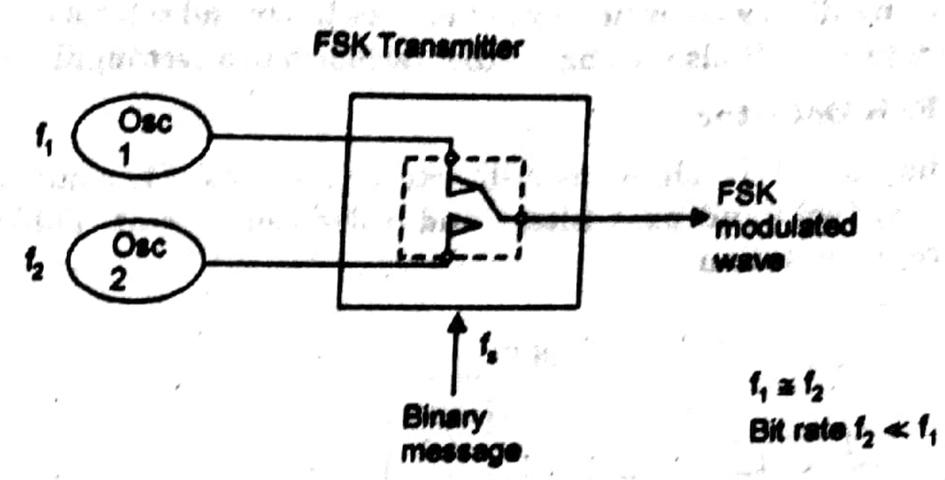

The two oscillators, producing a higher and a lower frequency signals, are connected to a switch along with an internal clock. To avoid the abrupt phase discontinuities of the output waveform during the transmission of the message, a clock is applied to both the oscillators, internally. The binary input sequence is applied to the transmitter so as to choose the frequencies according to the binary input.

FSK Demodulator

There are different methods for demodulating a FSK wave. The main methods of FSK detection are asynchronous detector and synchronous detector. The synchronous detector is a coherent one, while asynchronous detector is a non-coherent one.

Asynchronous FSK Detector

The block diagram of Asynchronous FSK detector consists of two band pass filters, two envelope detectors, and a decision circuit. Following is the diagrammatic representation.

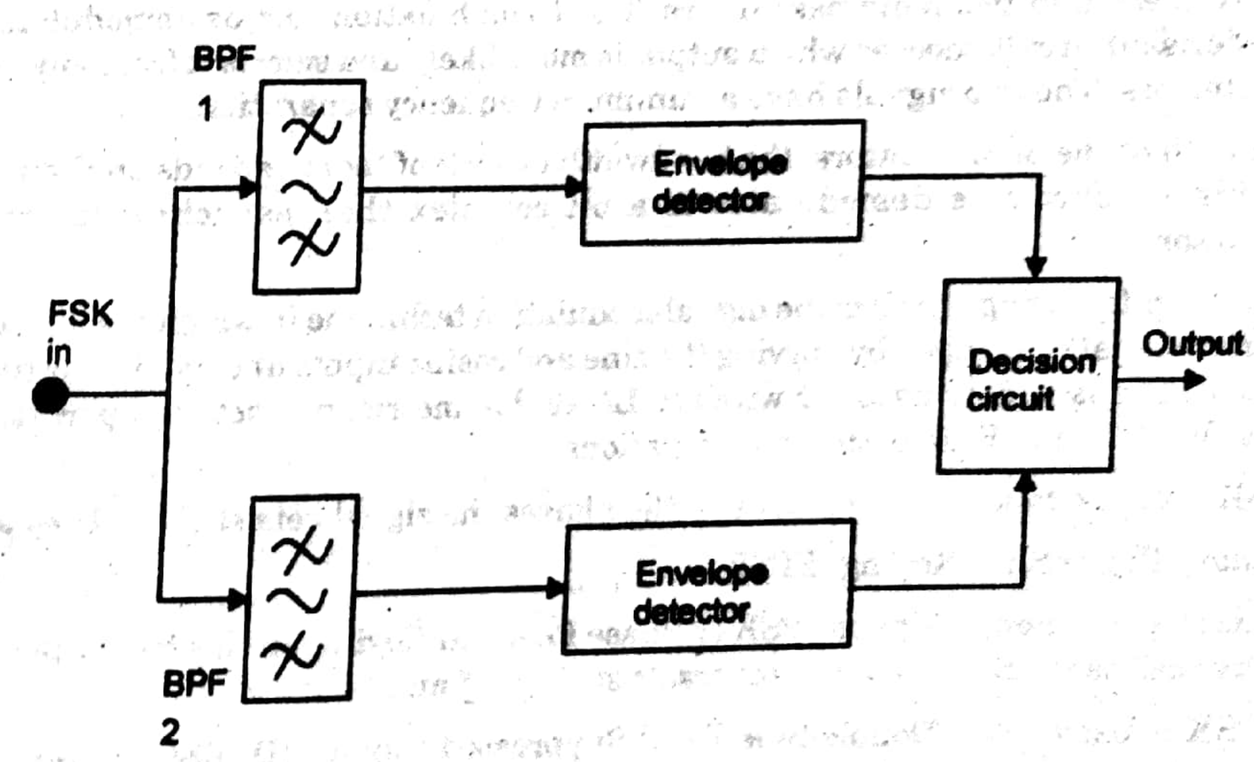

The FSK signal is passed through the two Band Pass Filters (BPFs), tuned to Space and Mark frequencies. The output from these two BPFs look like ASK signal, which is given to the envelope detector. The signal in each envelope detector is modulated asynchronously.

. The decision circuit chooses which output is more likely and selects it from any one of the envelope detectors. It also re-shapes the waveform to a rectangular one.

Synchronous FSK Detector

The block diagram of Synchronous FSK detector consists of two mixers with local oscillator circuits, two band pass filters and a decision circuit. Following is the diagrammatic representation.

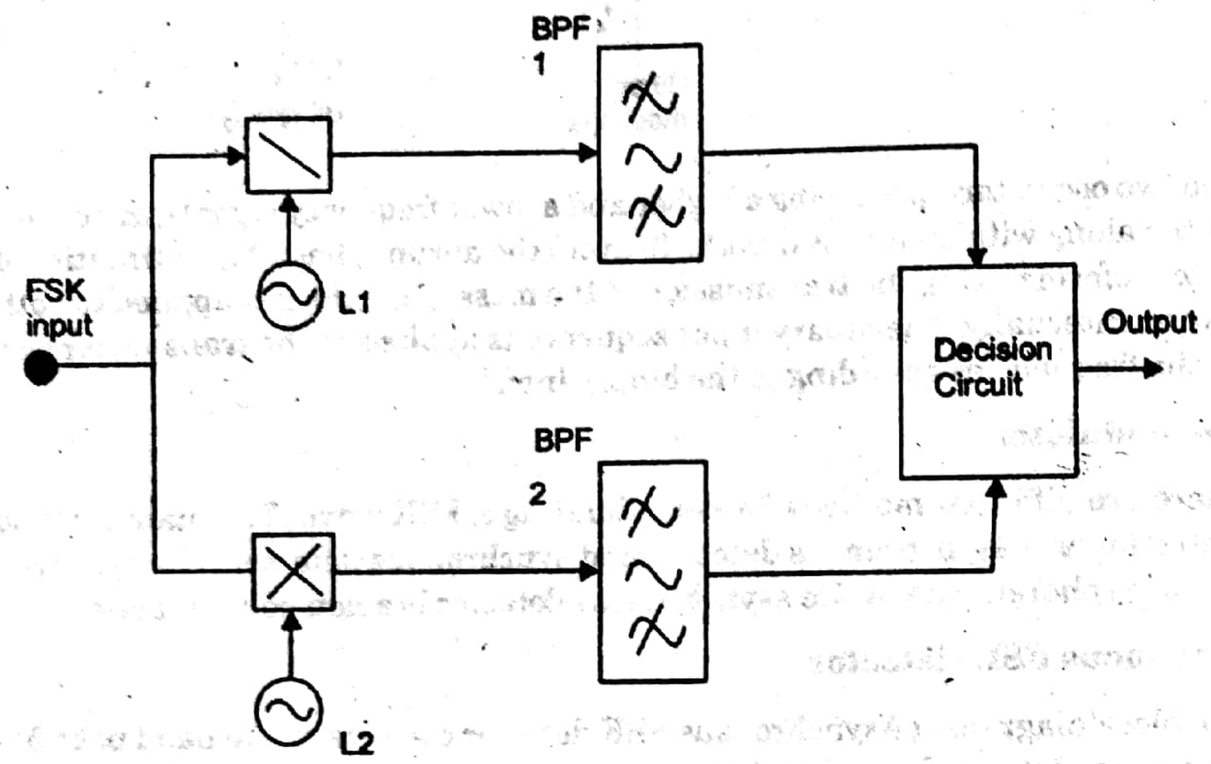

The FSK signal input is given to the two mixers with local oscillator circuits. These two are connected to two band pass filters. These combinations act as demodulators and the decision circuit chooses which output is more likely and selects it from any one of the detectors. The two signals have a minimum frequency separation.

For both of the demodulators, the bandwidth of each of them depends on their bit rate. This synchronous demodulator is a bit complex than asynchronous type demodulators.

Phase Shift Keying (PSK) is the digital modulation technique in which the phase of the carrier signal is changed by varying the sine and cosine inputs at a particular time. PSK technique is widely used for wireless LANs, bio-metric, contactless operations, along with RFID and Bluetooth communications.

PSK is of two types, depending upon the phases the signal gets shifted. They are

Binary Phase Shift Keying (BPSK)

This is also called as 2-phase PSK or Phase Reversal Keying. In this technique, the sine wave carrier takes two phase reversals such as 0° and 180°.

BPSK is basically a Double Side Band Suppressed Carrier (DSBSC) modulation scheme, for message being the digital information.

Quadrature Phase Shift Keying (QPSK)

This is the phase shift keying technique, in which the sine wave carrier takes four phase reversals such as 0°, 90°, 180°, and 270°.

If this kind of techniques are further extended, PSK can be done by eight or sixteen values also, depending upon the requirement.

BPSK Modulator

The block diagram of Binary Phase Shift Keying consists of the balance modulator which has the carrier sine wave as one input and the binary sequence as the other input. Following is the diagrammatic representation.

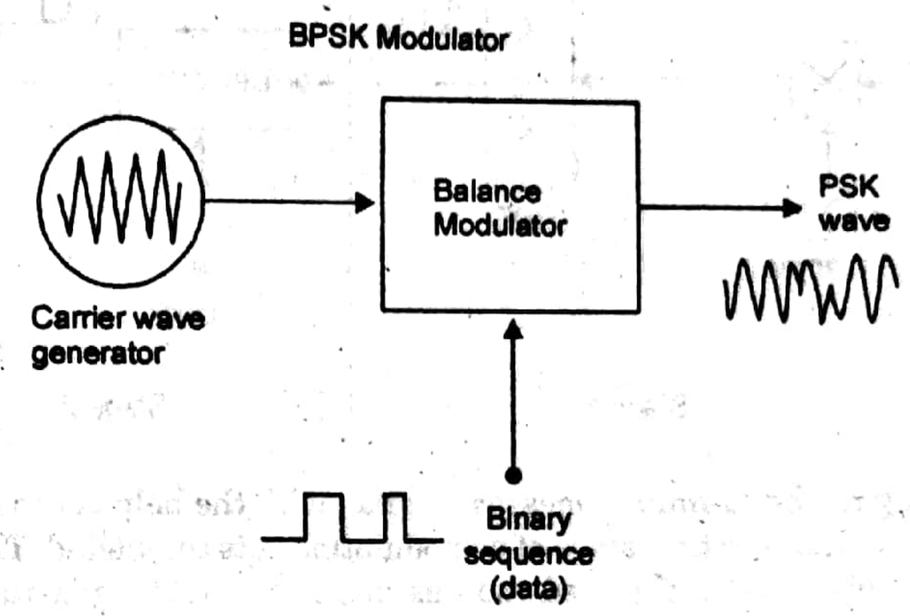

The modulation of BPSK is done using a balance modulator, which multiplies the two signals applied at the input. For a zero binary input, the phase will be 0° and for a high input, the phase reversal is of 180°.

Following is the diagrammatic representation of BPSK Modulated output wave along with its given input.

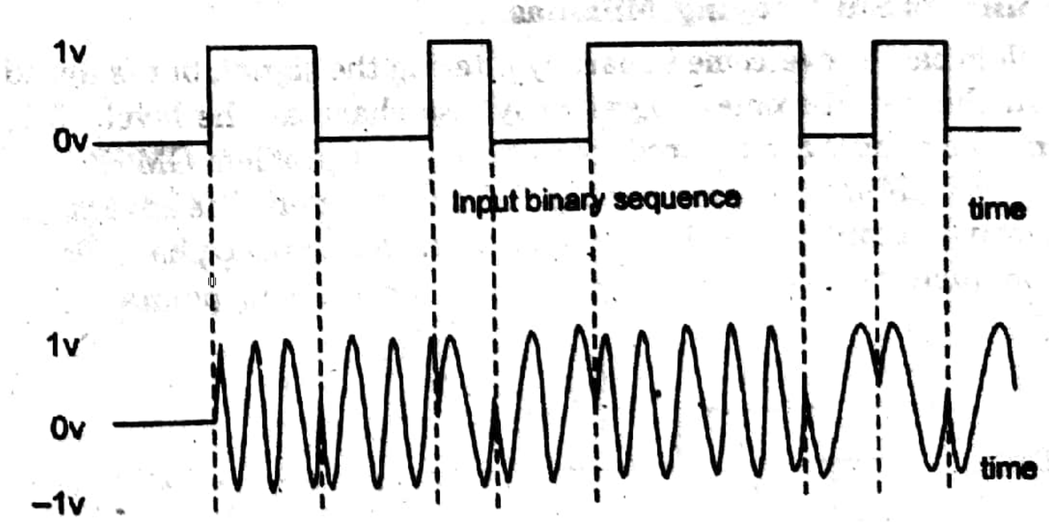

BPSK Modulated output wave

The output sine wave of the modulator will be the direct input carrier or the inverted (180° phase shifted) input carrier, which is a function of the data signal.

BPSK Demodulator

The block diagram of BPSK demodulator consists of a mixer with local oscillator circuit, a bandpass filter, a two-input detector circuit. The diagram is as follows.

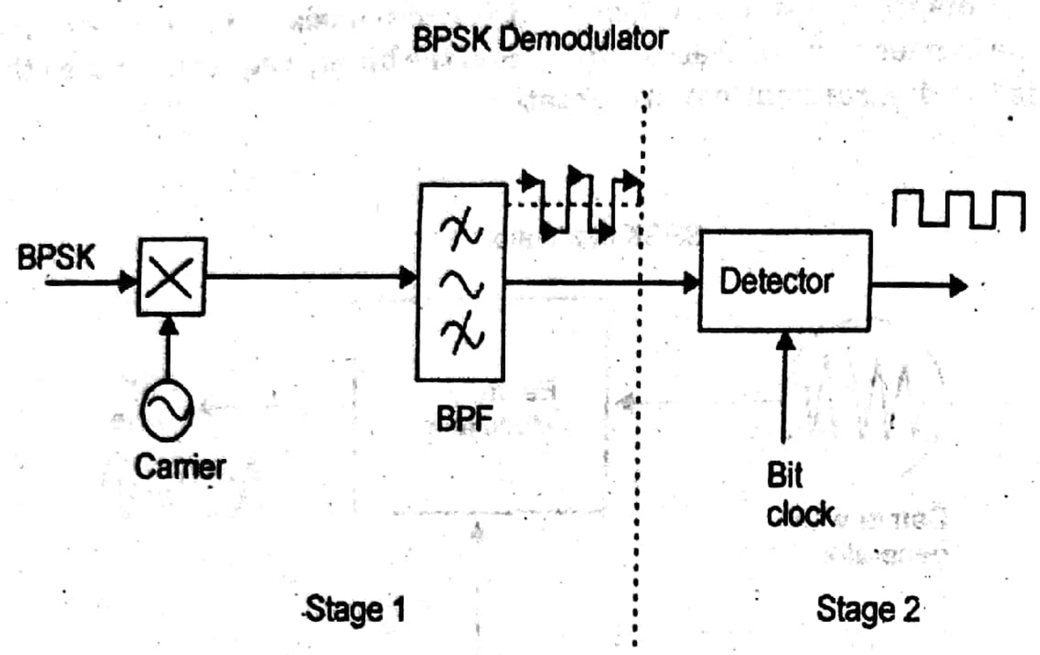

By recovering the band-limited message signal, with the help of the mixer circuit and the band pass filter, the first stage of demodulation gets completed. The base band signal which is band limited is obtained and this signal is used to regenerate the binary message bit stream.

In the next stage of demodulation, the bit clock rate is needed at the detector circuit to produce the original binary message signal. If the bit rate is a sub-multiple of the carrier frequency, then the bit clock regeneration is simplified. To make the circuit easily understandable, a decision-making circuit may also be inserted at the 2nd stage of detection.

Q.9. Compare MSK with QPSK and explain how MSK is superior over QPSK. (12.5)

Ans. Minimum Shift Keying, MSK basics

The problem can be overcome in part by filtering the signal, but is found that the transitions in the data become progressively less sharp as the level of filtering is increased and the bandwidth reduced. To overcome this problem GMSK is often used and this is based on Minimum Shift Keying, MSK modulation. The advantage of which is what is known as a continuous phase scheme. Here there are no phase discontinuities because the frequency changes occur at the carrier zero crossing points.

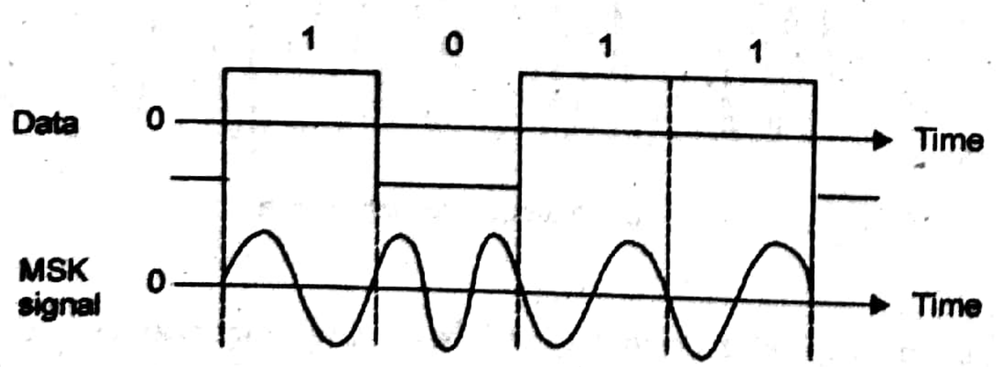

Fig. Signal using MSK modulation

When looking at a plot of a signal using MSK modulation, it can be seen that the modulating data signal changes the frequency of the signal and there are no phase discontinuities. This arises as a result of the unique factor of MSK that the frequency difference between the logical one and logical zero states is always equal to half the data rate. This can be expressed in terms of the modulation index, and it is always equal to 0.5.

Quadrature phase shift keying (QPSK) is another modulation technique, and it's a particularly interesting one because it actually transmits two bits per symbol. In other words, a QPSK symbol doesn't represent 0 or 1—it represents 00, 01, 10, or 11.

This two-bits-per-symbol performance is possible because the carrier variations are not limited to two states. In ASK, for example, the carrier amplitude is either amplitude option A (representing a 1) or amplitude option B (representing a 0). In QPSK, the carrier varies in terms of phase, not frequency, and there are *four* possible phase shifts.

We can intuitively determine what these four possible phase shifts should be: First we recall that modulation is only the beginning of the communication process; the receiver needs to be able to extract the original information from the modulated signal. Next, it makes sense to seek maximum separation between the four phase options, so that the receiver has less difficulty distinguishing one state from another. We have 360° of phase to work with and four phase states, and thus the separation should be 360°/4 = 90°. So our four QPSK phase shifts are 45°, 135°, 225°, and 315°.

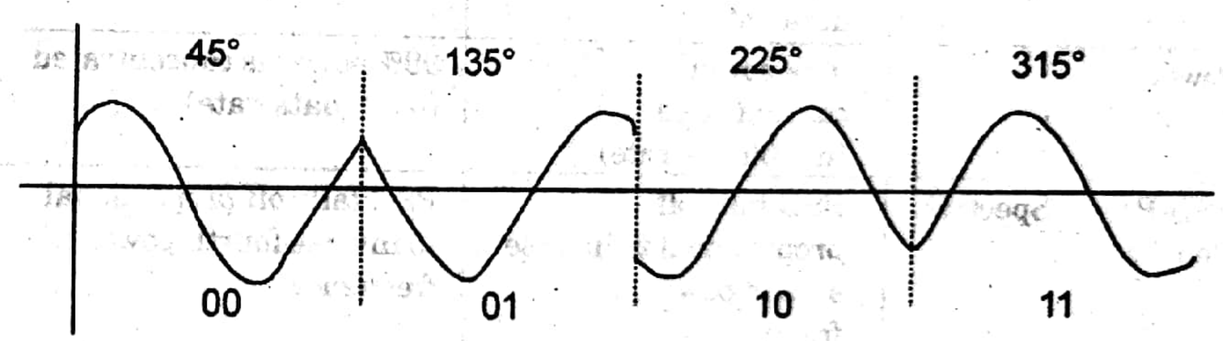

(Note: The phase-shift-to-digital-data correspondence shown above is a logical though arbitrary choice; as long as the transmitter and receiver agree to interpret phase shifts in the same way, different correspondence schemes can be used.)

There's another reason why it makes sense to choose 45°, 135°, 225°, and 315°: they are easily generated using I/Q modulation techniques because summing I and Q signals that are either inverted or noninverted results in these four phase shifts. The following table should clarify this:

I	Q	phase shift of 1 + Q
noninverted	noninverted	45°
inverted	noninverted	135°
inverted	inverted	225°
noninverted	inverted	315°

Compared to modulation schemes that transmit one bit per symbol, QPSK is advantageous in terms of bandwidth efficiency. For example, imagine an analog baseband signal in a BPSK (binary phase shift keying) system. BPSK uses two possible phase shifts instead of four, and thus it can transmit only one bit per symbol. The baseband signal has a certain frequency, and during each symbol period, one bit can be transmitted. A QPSK system can use a baseband signal of the same frequency, yet it transmits *two* bits during each symbol period. Thus, its bandwidth efficiency is (ideally) higher by a factor of two.

Following table covers difference between QPSK and MSK.

Specifications	QPSK modulation	MSK modulation
Full form	Quadrature Phase Shift Keying	Minimum Shift Keying
Maximum phase	+/-90 , +/-180 degrees	Phase change of +/-90 degree smoothly over course of a bit period
RF Amplifier requirement	requires linear amplifier nonlinear amplifier if used will result into spectral regrowth due to +/–180 phase transition	phase change is linear and hence allows use of nonlinear amplifier
Null Bandwidth	equal to 1.0 times data rate	equal to 1.5 times data rate
Power	99% power is concentrated in 1.0(data rate)	99% power is concentrated in 1.2(data rate)
PSD(Power Spectral Density)	PSD falls off proportional to inverse second power of frequency	PSD falls off proportional to inverse fourth power of frequency
Amplitude variation	on the order of 30dB	very less
mainlobe to sidelobe suppression	poor	is very high. Side lobes are much smaller compare to main lobe and hence filtering of MSK modulated signal is easier.
Width of main lobe	1.0 times data rate	main lobe is wider than QPSK i.e. 1.5 times data rate
definition	two BPSK in phase quadrature	two BPSK signals are orthogonal to one another in frequency quadrature

FIRST TERM EXAMINATION [SEP. 2018]
FIFTH SEMESTER [B.TECH]
DIGITAL COMMUNICATION [ETEC–303]

Time : 1.5 hrs. **M.M. : 30**

Note: *Q. 1. is compulsory. Attempt any two questions from the rest.*

Q.1. (a)Define Companding. Further describe the concept of A-law companding. **(2)**

Ans. Companding process basically refers to two processes

(i) Compressing

(ii) Expanding

Both are equivalently opposite to each other and can improve the S/N at the receiver. Most of the times the signals which are of practical use are having non-uniform nature. Hence uniform quantization will distort the reproduction of such signals at the receiver.

Hence to improve the S/N ratio companding is done.

For a given continuous signal having Pdf $f_X(x)$. Number of quantization levels are chosen such that,(S_q/N_q) is maximized

For this purpose S_q should be maximized and N_q should be minimized.

$$S_q = E[x^2]$$

and

$$N_q = \sum_{i=1}^{Q} \int_{x_{i-1}}^{x_i} (x - m_i)^2 f_X(x)dx$$

Here

$$x_0 = -\infty \text{ and } x_q = \infty$$

A-law compressor, and is given by

$$g(x) = \frac{1 + \log A\,|x|}{1 + \log A} \operatorname{sgn}(x)$$

where A is choosen to be 87.56 and the performance of this compander is characterised and is comparable with that of μ-law.

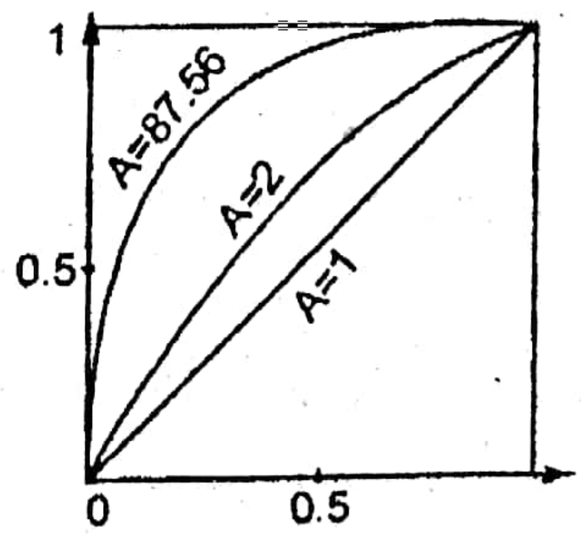

Q. 1. (b) What is the working principle of AMI line coding scheme? Draw the AMI code for the bit stream 1100101110. **(2)**

Ans. Alternate Mark Inversion is a line encoding scheme used in telecommunications systems where binary 0 (zero) is represented using no charge, binary 1 is represented by either a positive, or negative electrical charge; each successive one uses the opposite charge used for the previous binary 1.

Alternate Mark Inversion refers to the mark bit (the binary 1) using a positive charge the first time it is transmitted and negative charge on the second.

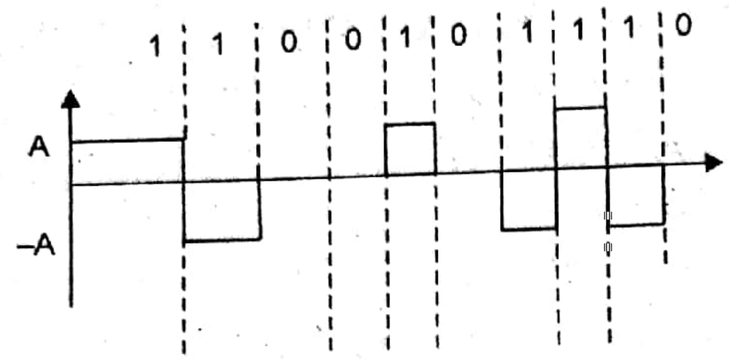

Q. 1. (c) What is meant by Granular noise error and how can it be avoid. **(2)**

Ans. Granular noise: If the step-size is made arbitrarily large to avoid slope-overload distortion, it may lead to 'granular noise'. Larger step-size increases the granular noise while smaller step size increases the degree of slope-overload distortion.

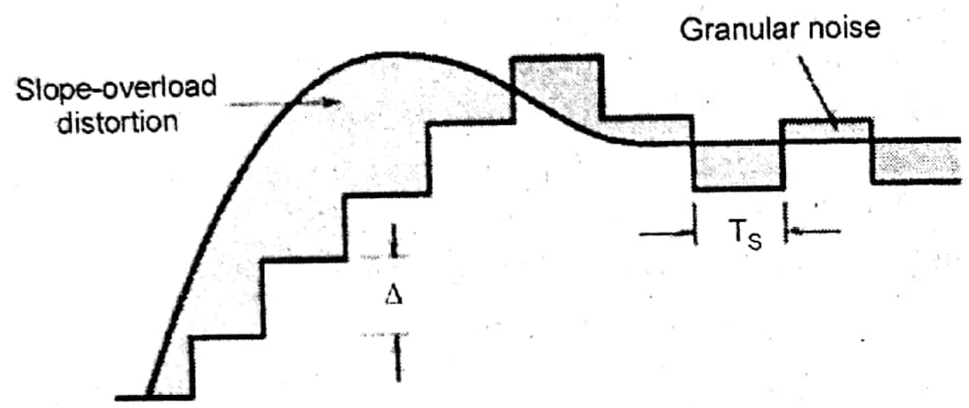

Q. 1. (d) Derive the mean of a Poisson Random Variable **(2)**

Ans. Poisson Distribution: Poisson model describes another integer valued Random variable associated with the repeated trials.

Poisson random variable corresponds to the number of times an event occurs in an interval ΔT it is given by $P\Delta T$ that is small

then the resulting poisson frequency function is

$$P_I(i) = \frac{e^{-\mu T}(\mu T)^i}{i!}$$

where μT is mean value.

These expressions describe the random phenomena such as radio active decay and shot noise in electronic devices, which relate to the time distribution of event (e.g. an atom decaying in a sample or an electron being emitted from a cathode poisson model also approximate the binomial distribution for the case n is very large and Probability (α) is small and the product $n\ \alpha$ is finite.

In such case let $\mu T = m$ then

Poisson's approximation is

$$P_I(i) \approx e^{-m}\frac{m^i}{i!}$$

Q. 1. (e) Under what conditions is a Random process considered stationary in the strict sense and when is it considered stationary in the wide sense. **(2)**

Ans. Stationarity refers to time invariance of some, or all, of the statistics of a random process, such as mean, autocorrelation, n-th-order distribution.

We define two types of stationary: strict sense (SSS) and wide sense (WSS) • A random process X (t) (or X 2) is said to be SSS if all its finite order distributions are time invariant, i.e., the joint cdfs (pdfs, pmfs) of X (t 1), X (t 2), . . . , X (t k) and X (t 1 + τ), X (t 2 + τ), . . . , X (t k + τ) are the same for all k, all t 1, t 2, . . . , t k, and all time shifts τ.

A random process X (t) is said to be wide-sense stationary (WSS) if its mean and autocorrelation functions are time invariant, i.e., °E% E(X (t)) = μ, independent of t ° R X (t 1, t 2) is a function only of the time difference t 2 – t 1 °E[X (t) 2] < ∞ (technical condition) Since R X (t 1, t 2) = R X (t 2, t 1), for any wide sense stationary process X (t), R X (t 1, t 2) is a function only of | t 2 – t 1 |

All SSS are WSS but converse in not true.

Q. 2. (a) Explain the concept of Delta modulation and demodulation using the aid of properly labelled block diagrams. If a Delta modulator is fed with a sinusoidal input of frequency 1.6kHz, then what should be the minimum sampling frequency (rounded to the nearest kHZ) for the SNR of the system to be at least 30dB, if it is assumed that the modulation system is designed to avoid slope overload distortion. **(3 + 3 = 6)**

Ans. The type of modulation, where the sampling rate is much higher and in which the stepsize after quantization is of a smaller value Δ, such a modulation is termed as delta modulation.

Delta Modulation is a simplified form of DPCM technique, also viewed as 1-bit DPCM scheme. As the sampling interval is reduced, the signal correlation will be higher.

Delta Modulator

The Delta Modulator comprises of a 1-bit quantizer and a delay circuit along with two summer circuits. Following is the block diagram of a delta modulator.

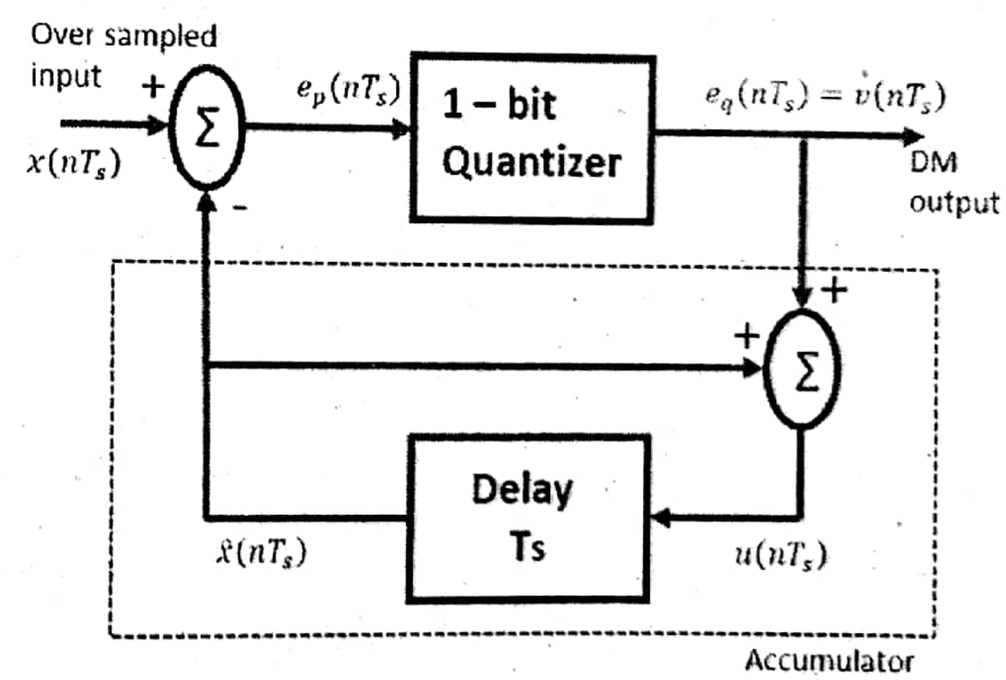

The predictor circuit in DPCM is replaced by a simple delay circuit in DM.

From the above diagram, we have the notations as

- $x(nT_s)x(nT_s)$ = over sampled input
- $ep(nT_s)ep(nT_s)$ = summer output and quantizer input

- $eq(nT_s)eq(nT_s)$ = quantizer output = $v(nT_s)v(nT_s)$
- $\hat{x}(nT_s)\,\hat{x}(nT_s)$ = output of delay circuit
- $u(nT_s)u(nT_s)$ = input of delay circuit
- **Delta Demodulator**
- The delta demodulator comprises of a low pass filter, a summer, and a delay circuit. The predictor circuit is eliminated here and hence no assumed input is given to the demodulator.
- Following is the diagram for delta demodulator.

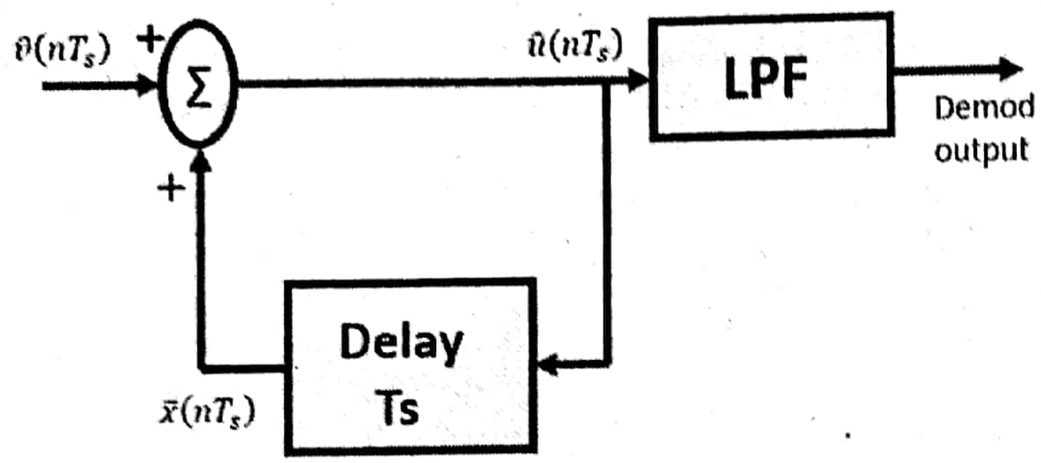

$$(SNR)_0 = \frac{3F_s^2}{8\pi^2 F_m^2 F_M}$$

$$F_m = 1.6 \text{ KHz}$$
$$F_S = ?$$
$$(SNR)_{dB} = 30 \text{ dB} = 10^3$$
$$F_M \geq F_m = 1.6 \text{ KHz (assuming)}$$

$$10^3 = \frac{3 \times F_S^2}{8 \times (3.14)^2 (1.6)^2 (1.6)}$$

$$F_S = 328.16$$

$$\boxed{F_S = 328KHz}$$

Q. 2. (b) Explain the need and principle of operation of Differential Pulse Code Modulation.Use the aid of properly labelled block diagrams. (4)

Ans. Working Principle: In fact the differential pulse code modulation works on the principle of prediction. The value of the present sample is predicted from the past samples. The prediction may not be exact but it is very close to the actual sample value. Figure given below shows the transmitter of Differential Pulse Code Modulation (DPCM) system. The sampled signal is denoted $x(nT_s)$ and the predicted signal is denoted by $\hat{x}(nT_s)$. The comparator finds out the difference between the actual sample value $x(nT_s)$ and predicted sample value $\hat{x}(nT_s)$. This is known as Prediction error and it is denoted by $e(nT_s)$. It can be defined as,

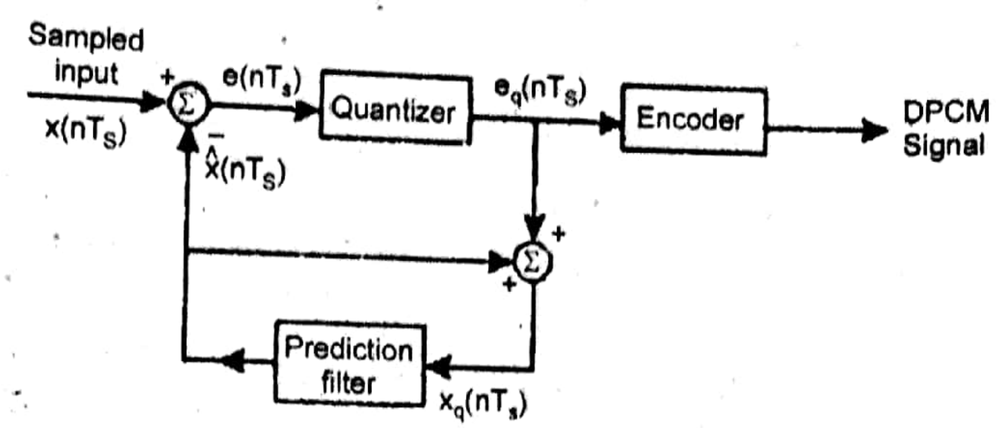

Thus, error is the difference between unquantized input sample $x(nT_s)$ and prediction of it $x(nT_s)$. The predicted value is produced by using a prediction filter. The quantizer output signal gap $e_q(nT_s)$ and previous prediction is added and given as input to the prediction filter. This signal is *called* $x_q(nT_s)$. This makes the prediction more and more close to the actual sampled signal. We can observe that the quantized error signal $e(nT_s)$ is very small and can be encoded by using small number of bits. Thus number of bits per sample are reduced in DPCM.

The quantizer output can be written as,

$$e_q(nT_s) = e(nT_s) + q(nT_s)$$

Here, $q(nT_s)$ is the quantization error. As shown in figure, the prediction filter input $x_q(nT_s)$ is obtained by sum $\hat{x}(nT_s)$ and quantizer output *i.e.*

$$x_q(nT_s) = \hat{x}(nT_s) + e_q(nT_s)$$

Substituting the value of $eq(nT_s)$ in the above equation, we get,

$$x_q(nT_s) = \hat{x}(nT_s) - \hat{x}(nT_s) + q(nT_s)$$

$$e(nT_s) = x(nT_s) - \hat{x}(nT_s)$$

$$\therefore \quad e(nT_s)\,\hat{x}(nT_s) = x(nT_s)$$

Therefore, the value of $e(nT_s) + \hat{x}(nT_s)$ we get,

$$x_q(nT_s) = x(nT_s) + q(nT_s)$$

***(ii)* Redundant information in PCM.**

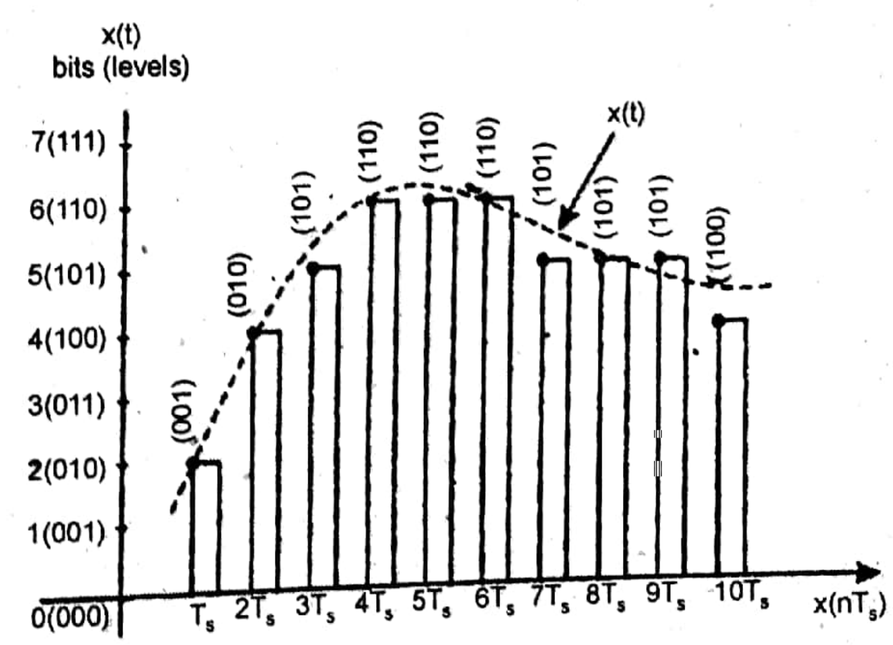

Figure given above shows a continuous time signal $x(t)$ by dotted line. This signal is sampled by flat top sampling at intervals T_s, $2T_s$, $3T_s$... nT_s. The sampling frequency is selected to be higher than nyquist rate. The samples are encoded by using 3 bit (7 levels) PCM. The sample is quantized to the nearest digital level as shown by small circles in the figure. The encoded binary value of each sample is written on the top of the samples. We can observe from figure that the samples taken at $4T_s$, $5T_s$ are encoded to same value of (110). This information can be carried only by one sample. But three samples are carrying the same information means that it is redundant. We consider another example of samples taken at $9T_s$ and $10T_s$. The difference between these samples only due to last bit and first two bits are redundant, since they do not change.

If this redundancy is reduced, then overall bit rate will decrease and number of bits required to transmit one sample will also be reduced. This type of digital pulse modulation scheme is known as Differential Pulse Code Modulation (DPCM).

Q. 3. (a)What are the properties of PDF and CDF functions? For what value of k would the following function to be a valid PDF of a random variableX'

(3 + 2 =5)

$$f_X(x) = \begin{cases} kx^2 & 0 \le x \le 5 \\ 0 & \text{otherwise} \end{cases}$$

Ans. If $f(x)$ is a **probability density function** for a continuous random variable X then it has the following properties:

1. $F_x(x) = \frac{d}{dx}F(x)$
2. $f(x) \ge 0$ for any value of x
3. $\int_{-\infty}^{\infty} f(x)dx = 1$

The **cumulative distribution function** for a random variable X, denoted by $F(x)$, is the probability that X assumes a value less than or equal to x:

$$F(x) = \Pr(X \le x)$$

The cumulative distribution function has the following properties:

- $0 \le F(x) \le 1$ for all values of x
- $\lim_{x \to -\infty} F(x) = 0$
- $\lim_{x \to +\infty} F(x) = 1$
- $F(x)$ is a nondecreasing function of x

Additionally, for continuous random variables, $F(x)$ is a continuous function.

As we know

$$\int_{-\infty}^{\infty} f_X(x)d(x) = 1$$

$$\int_0^5 kx^2 dx = 1$$

$$k\left[\frac{x^3}{3}\right]_0^5 = 1$$

$$k\left[\frac{125}{3} - 0\right] = 1,$$

$$\boxed{k = \frac{3}{125}}$$

Q. 3. (b)What are the properties of an autocorrelation function of a random.process? Find the autocorrelation function of a sine wave signal $x(t)$= A sin $(2\pi\omega_0 t + \theta)$.

(3 + 2 = 5)

Ans. Properties of an autocorrelation function:

- Autocorrelation is an even function for τ ;$R_{xx}(\tau) = R_{xx}(-\tau)$
- The mean-square value can be found by evaluating the autocorrelation where $\tau = 0$, which gives us $R_{xx}(0) = X^2$
- The autocorrelation function will have its largest value when $\tau = 0$. This value can appear again, for example in a periodic function at the values of the equivalent periodic points, but will never be exceeded. $R_{xx}(0) \ge |R_{xx}(\tau)|$
- If we take the autocorrelation of a period function, then $R_{xx}(\tau)$ will also be periodic with the same frequency.

Autocorrelation function of a sine wave signal $x(t) = A\sin(2\pi w_0 + \emptyset)$

$$R_z(t_1 + t_2) = E[X(t_1).\times(t_2)]$$
$$= E(A\sin(2\pi\omega_0 t, +\theta).A\sin(2\pi\omega_0 t_2 + \theta)]$$
$$= E[A^2\sin(2\pi\omega_0 t_1 + \theta).\sin(2\pi\omega_0 t_2 + \theta)]$$

Applying $\sin A.\sin B = \frac{1}{2}[\cos(A-B) - \cos(A+B)]$

$$= E\left[\frac{A^2}{2}\cos(2\pi\omega_0(t_1 - t_2) - \cos(2\pi\omega_0(t_1 + t_2) + 2\theta)\right]$$

$$\frac{A^2}{2}E[\cos(2\pi\omega_0(t_1 - t_2)] - \frac{A^2}{2}E[\cos(2\pi\omega_0(t_1 + t_2) + 2\theta)]$$

Does not contain θ — This integrates to zero

So, $E[\cos(2\pi\omega_0(t_1 - t_2)] = \cos(2\pi\omega_0(t_1 - t_2)$

$$R_z(t_1 - t_2) = \frac{A^2}{2}[\cos(2\pi\omega_0(t_1 - t_2))]$$

Q. 4. (a) Draw the below mentioned Line codes for the bit stream 1001011010

1. NRZ-M polar Code

2. Manchester Code

3. RZ Bipolar Code

In terms of bandwidth requirement, sort these schemes from largest to smallest **(5)**

Ans.

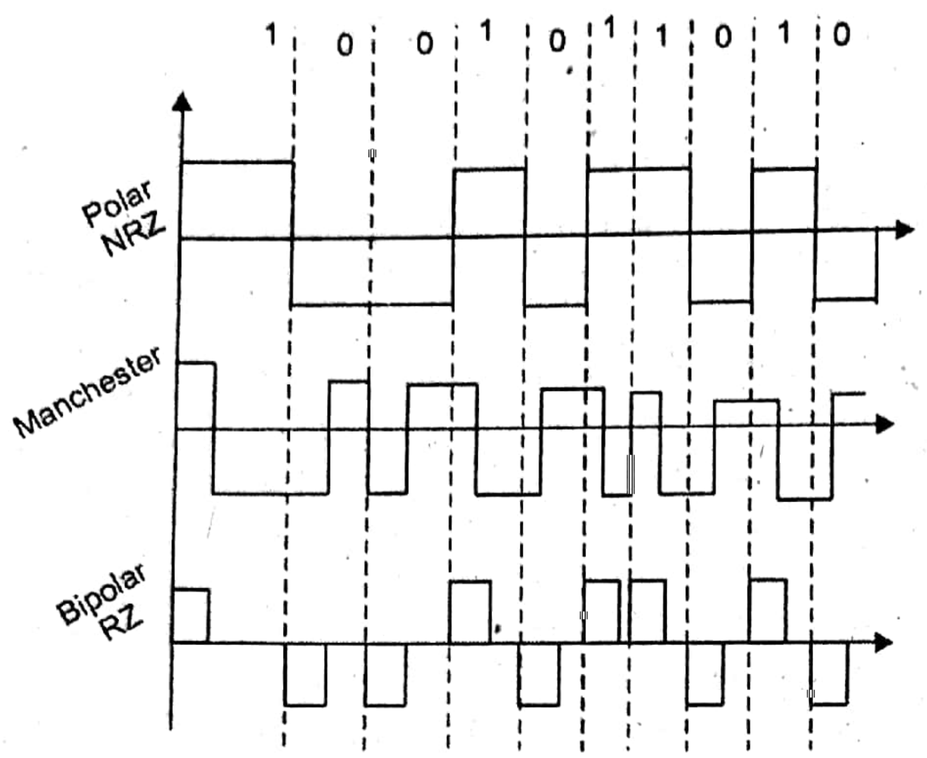

Bandwidth requirement

Manchester > Polar NRZ > Bipolar RZ

Q. 4. (b) Assuming that the quantization noise is uniformly distributed, prove that the signal to noise ratio of a PCM system increases by-6dB with increase of every bit in the encoder system. (5)

Ans. Figure shows this PDF,

The mean square value of a random variable X is given as,

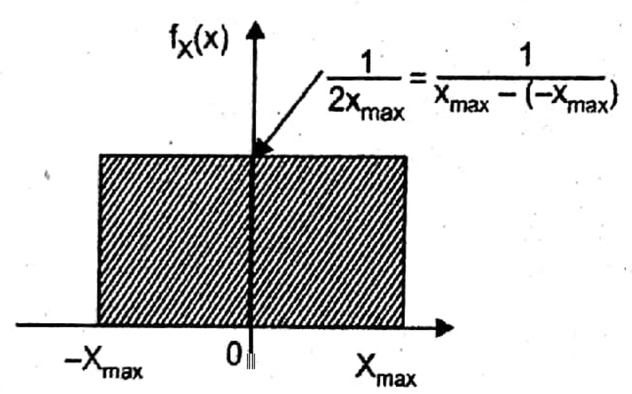

Fig. PDF of 8 uniformly distributed random variable

$$\overline{x^2(t)} = \int_{-\infty}^{\infty} x^2 . f_X(x) dx$$

Therefore, mean square value of x(t) will be,

$$\overline{x^2(t)} = \int_{-X_{max}}^{X_{max}} x^2(t) . \frac{1}{2X_{max}} dx = \frac{1}{2X_{max}} \left[\frac{x^3(t)}{3} \right]_{-X_{max}}^{X_{max}}$$

or

$$\overline{x^2(t)} = \frac{x_{max}^2}{3} \quad ...(i)$$

The signal power $= \frac{\overline{x^2(t)}}{R}$ {Since R = 1}

Normalized signal power $P = \frac{\overline{x^2(t)}}{1}$

Substituting the value of $\overline{x^2(t)}$ from (i), we get

$$P = \frac{X_{max}^2}{q}$$

We know that the relation between step size, maximum amplitude of signal and number of levels is given as

Step size $\Delta = \frac{2X_{max}}{q}$

$$X_{max} = \frac{\Delta q}{2}$$

Therefore, normalized signal power, $P = \frac{\left(\frac{\Delta q}{2}\right)^2}{3} = \frac{\Delta^2 q^2}{12}$

We also know that

Normalized noise power $= \frac{\Delta^2}{12}$

Therefore, signal to noise power ratio $\frac{S}{N} = \frac{\text{Normalized signal power}}{\text{Normalized noise power}}$

$$\frac{S}{N} = \frac{\Delta^2 q^2 / 12}{\Delta^2 / 12} = q^2$$

Since $q = 2^V$, above equation will be,

$$\frac{S}{N} = 2^{2v}$$

or

$$\left(\frac{S}{N}\right) dB = 10 \log_{10}(2^{2v}) dB = 6v$$

where V = number of bits.

This is required expression for maximum value of signal to noise ratio.

END TERM EXAMINATION [NOV.-DEC. 2018]
FIFTH SEMESTER [B.TECH]
DIGITAL COMMUNICATION [ETEC–303]

Time : 3 hrs. **M.M. : 75**

Note: *Attempt any five questions including Q. No. 1 which is compulsory. Assume any missing data suitably, if not given.*

Q.1. (a)Write a short note on PCM and explain the role of compander in PCM. (5)

Ans. PCM is a waveform coding technique whose simple block diagram is given as follow:

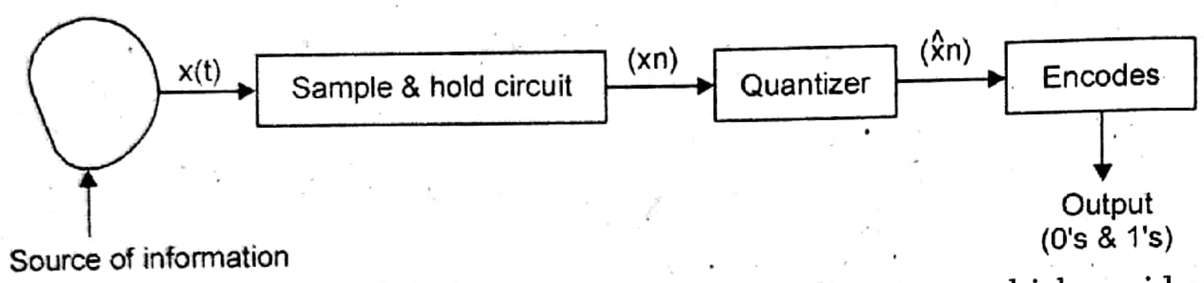

usually there is a filter of bandwidth 'W' prior to the sampling stage which avoid any noisy component to pass through it sampling is done of a higher rate than the nyquist rate to allow for some guard band.

The sampled values then enter the quantizer (scaler). The quantizer may be uniform or non uniform depending on the type of source o/p.

There are mainly two types of companding;

(a) A-law companding.

(b) μ-law companding

These are mostly used in speech coding and uses logarithmic relations.

These functions are implemented on both transmitter and receiver side μ law:

$$g(x) = \frac{\log(1+\mu/x)}{\log(1+\mu)}\operatorname{sgn}(x)$$

Here $|x| \le 1$ and sgn (x) is a signum function.

Here μ is a parameter on which amount of compression and expansion depends.

For a standard PCM μ = 255 and at this value a uniform quantizer with 128 levels (7 bit/sample) is used. With this the system performance is improved by about 24 db.

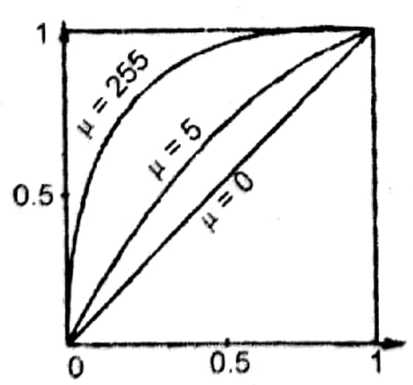

μ-law compander characteristics.

Second widely used logarithmic compressor is A-law compressor, and is given by

$$g(x) = \frac{1+\log A|x|}{1+\log A}\operatorname{sgn}(x)$$

Where A is choosen to be 87.56 and the performance of this compander is characterised and is comparable with that of μ-law.

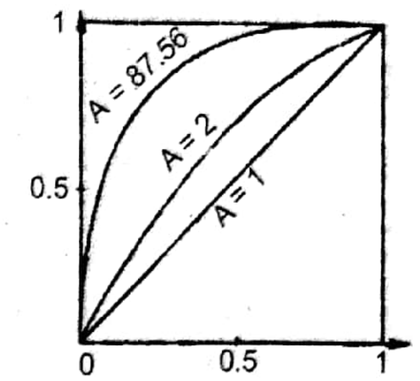

Q. 1. (b) Define mean, moment and variance of random variable X. (5)

Ans. The "moments" of a random variable (or of its distribution) are expected values of powers or related functions of the random variable.

The r th moment of X is $E(X^r)$.

In particular, the first moment is the mean, $\mu X = E(X)$.

The mean is a measure of the "center" or "location" of a distribution.

Another measure of the "center" or "location" is a median, defined as a value m such that $P(X < m) \le 1/2$ and $P(X \le m) \ge 1/2$. If there is only one such value, then it is called the median.

The rth central moment of X is $E[(X-\mu X)^r]$.

In particular, the second central moment is the variance, $\sigma^2 X = Var(X) = E[(X-\mu X)^2]$

Q. 1. (c) A Television signal having a bandwidth of 4.2 *MHz* is transmitted using binary PCM system. Given that the number of quantization levels is 512. Determine-

(i) Code word length

(ii) Transmission bandwidth

(iii) Final bit rate

(iv) Output signal to quantization noise ratio.

Ans. Given that the bandwidth is 4.2 MHz. This means that highest frequency component will have frequency of 4.2 MHz i.e.,

$$f_m = 4.2 \text{ MHz}$$

Also, given that quantization levels, q = 512

(i) We know that the number of bits and quantization levels are related in binary PCM as under.

$$q = 2^v$$

i.e. $$512 = 2^v$$

or $$\log_{10} 512 = v \log_{10} 2$$

or $$v = \frac{\log_{10} 512}{\log_{10} 2}$$

Simplifying. we get, $v = 9$ bits

Hence the code word length is 9 bits.

(ii) We know that the transmission channel bandwidth is given as,

$$BW \geq vf_m \geq 9 \times 4.2 \times 10^6 \text{ Hz} \geq 37.8 \text{ MHz}$$

(iii) The final bit rate is equal to signaling rate.

We know that the signaling rate is given as,

$$r = vf_s \quad \text{...(i)}$$

Here, sampling frequency is given as $f_s > 2f_m$

Thus, $f_s \geq 2 \times 4.2$ MHz since $f_m = 4.2$ MHz

or $f_s \geq 8.4$ MHz

Substituting this value of 'f_s' equation (i) for signaling rate, we get

$$r = 9 \times 8.4 \times 10^6 \text{ bits/sec} = 75.6 \times 10^6 \text{ bits/sec}$$

(iv) The transmission bandwidth may also be obtained as,

$$BW > \frac{1}{2}r \geq \frac{1}{2} \times 75.6 \times 10^6 \text{ bits/sec}$$

or, BW ≥ 37.8 MHz which is same as the value obtained earlier.

The output signal to noise ratio is expressed as

$$\left(\frac{S}{N}\right) dB \leq (4.8 + 6v) dB$$

But $v = 9$

$$(SNR) \text{ dB} = 4.8 + 6 \times 9 = 58.8 \text{ dB}.$$

Q. 1. (d) Explain about the Gram- Schmidt process in band pass digital transmission. **(5)**

Ans. GRAM schmidt orthogonalisation procedure:

This is a systematic approach to extract the basis signals from the known signal set. Projection of vector say X_2 on to another vector say x, is calculated on the basis of the following relation:

$$C_{12} = \frac{< x_1, x_2 >}{\|X_1\|^2} y_1$$

The error in this approximation is the vector $X_2 - C_{12} X_1$

$$\text{error vector} = x_2 - \frac{< x_1, x_2 >}{\|X_1\|^2} x_1$$

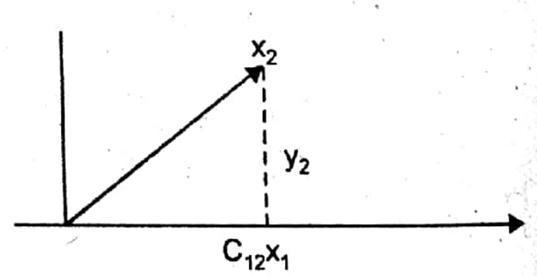

Let us choose the option as

then $y_1 = x_1$

$$y_2 = x_2 - \frac{< x_1, x_2 >}{\|x_1\|^2} x_1$$

$$= x_2 - \frac{(y_1, x_2)}{\|y_1\|^2} y_1$$

Then third orthogonal vector can be derived as $y_3 = x_3 -$ sum of projection X_3 on y_1 and y_2

$$= x_3 - \frac{(y_1, x_3)}{y_1} - \frac{(y_2 - x_3)}{\|y_2\|}$$

in this similar way $y_1, y_2 - y_N$ can be obtained where $y_1 = x_1$.

Q. 1. (e) Derive the probability of error for binary ASK and binary PSK systems and also compare them. **(5)**

Ans. Coherent ASK: The local signal is assumed to be as $S_2(t) - S_1(t) = A \cos w_c t$. The receiver makes a decision about which of the two signal $S_1(t)$ or $S_2(t)$ is present. Errors may occur due to noise at the receiver.

$$So_1(KT_b) = \int_o^{Tb} S_1(t)[S_2(t) - S_1(t)]dt = 0$$

during the signalling interval and

$$So_2(kT_b) = \int_o^{T_b} S_2(t)[S(t) - S_1(t)]dt$$

$$= \frac{A^2}{2} T_b$$

Then Probability of error for ASK is

$$P_e = \int_{\frac{1}{2}\gamma_{max}}^{\infty} \frac{1}{\sqrt{2\pi}} \exp\left(-\frac{2^2}{2}\right) dz$$

$$= Q\left(\sqrt{\frac{A^2 T_b}{4\eta}}\right)$$

(2) Coherent PSK: Here phase of the carrier signal changes in accordance with the binary signal.

Here
$$So_1(KT_b) = \int_{(K-1)T_b}^{KT_b} S_1(t)[S_1(t) - S_2(t)S_1]dt$$

$$= -A^2 T_b$$

$$So_2(KT_b) = \int_{(k-1)T_b}^{KT_b} S_2(t)[S_2(t) - S_1(t)]dt$$

$$= A^2 T_b$$

Then the Probability of error (P_e) is given by

$$P_e = Q(\gamma_{max}/2)$$

where

$$\gamma^2_{max} = \frac{2}{\eta} \int_o^{T_b} (2A \cos w_c t)^2 dt$$

$$= \frac{4A^2 T_b}{h}$$

or $$P_e = Q(\sqrt{A^2T_b/h}$$

and $$S_{av} = A^2/2 = \text{Average signal power}$$

$$E_{av} = (A^2/2)T_b = \text{Signal energy}$$

then $$P_e = Q\left(\sqrt{\frac{(2S_{av}T_b}{\eta}}\right)$$

$$= Q\left(\sqrt{2E_{av}/\eta}\right)$$

UNIT-I

Q. 2. What is waveform coding? Explain its salient characteristics. Draw the RZ-unipolar, NRZ bipolar, Manchester, NRZ-Unipolar, differential manchester for the data stream 11100101011. (12.5)

Ans. Waveform coding is the type of speech digitization used in the public switched (wireline) telephony network. Waveform coding techniques describe the waveform' s instantaneous behavior. This means that the waveform does not have to be speech; in fact it can be analog data or a signaling tone. It is done independently of any special characteristics the input may exhibit. Such coding actually is called linear pulse-code modulation (PCM).

PCM is an important method of analog –to-digital conversion. In this modulation the analog signal is converted into an electrical waveform of two or more levels.

• The essential operations in the transmitter of a PCM system are Sampling, Quantizing and Coding. The Quantizing and encoding operations are usually performed by the same circuit, normally referred to as analog to digital converter. The essential operations in the receiver are regeneration, decoding and demodulation of the quantized samples. Regenerative repeaters are used to reconstruct the transmitted sequence of coded pulses in order to combat the accumulated effects of signal distortion and noise.

PCM Transmitter: Basic Blocks: 1. Anti aliasing Filter 2. Sampler 3. Quantizer 4. Encoder An anti-aliasing filter is basically a filter used to ensure that the input signal to sampler is free from the unwanted frequency components. For most of the applications these are low-pass filters. It removes the frequency components of the signal which are above the cutoff frequency of the filter. The cut off frequency of the filter is chosen such it is very close to the highest frequency component of the signal. Sampler unit samples the input signal and these samples are then fed to the Quantizer which outputs the quantized values for each of the samples. The quantizer output is fed to an encoder which generates the binary code for every sample. The quantizer and encoder together is called as analog to digital converter.

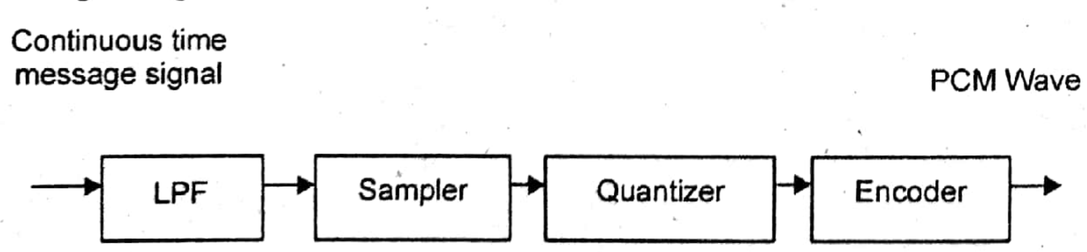

(a) Transmitter

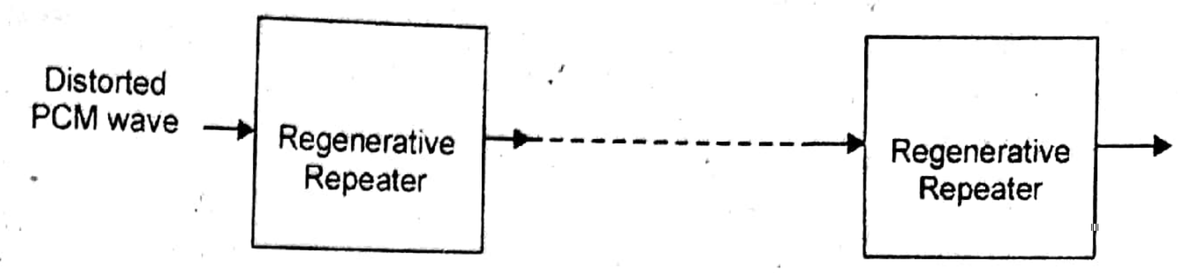

(b) Transmission Path

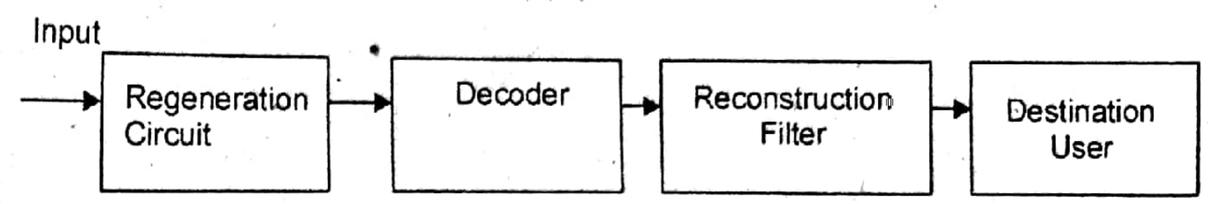

(c) Receiver

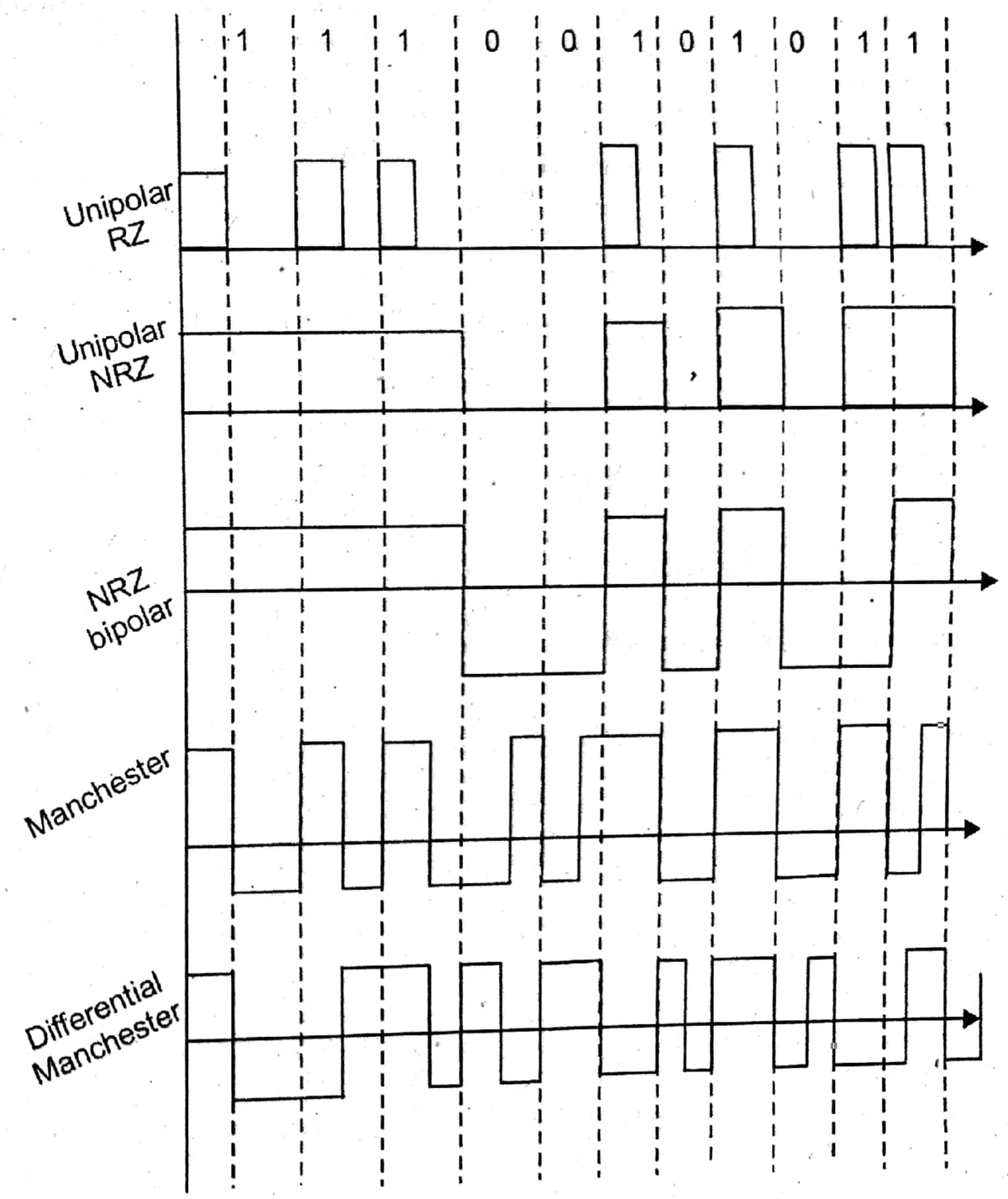

Q. 3. What are the limitations of Delta modulation? Explain with a neat block diagram. The Operation of a Adaptive delta modulation that eliminates the different noise that are occurring in Delta modulation. (12.5)

Ans. There are two major problems of delta modular:

(*a*) Slope overload distortion.

(*b*) Granular noise problem.

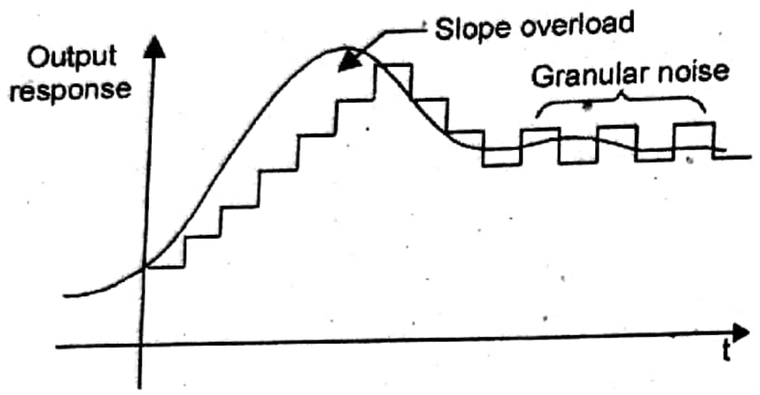

As shown in the figure, when the input signal suddenly rises then the given staircase waveform lags behind the message and there is a wide mis-match of the output bits and the input signal.

$$\text{Slope of input signal} = \frac{d}{dt}(m(t))$$

Let $$m(t) = A_m \cos w_m t$$

then $$\text{slope} = \frac{d}{dt}(A_m \cos w_m t)$$

$$= -A_m \sin w_m t \,.\, w_m$$

$$= -A_m w_m \sin w_m t$$

$$\text{magnitude of this slope} = A_m w_m$$

$$\text{Slope of Staircase waveform} = \frac{\Delta}{T_s}$$

Then slope overload occurs if

$$A_m w_m > \frac{\Delta}{T_s}$$

or $$A_m > \frac{\Delta}{T_s w_m}$$

Hence it can be avoided if $A_m \le \dfrac{\Delta}{T_s w_m}$

The granular noise occurs because of slow variation of input signal or when the variation lies in the upper and lower boundary of the pulse train.

This type of problem can be avoided if step size of the pulse is reduced in the range of the signal.

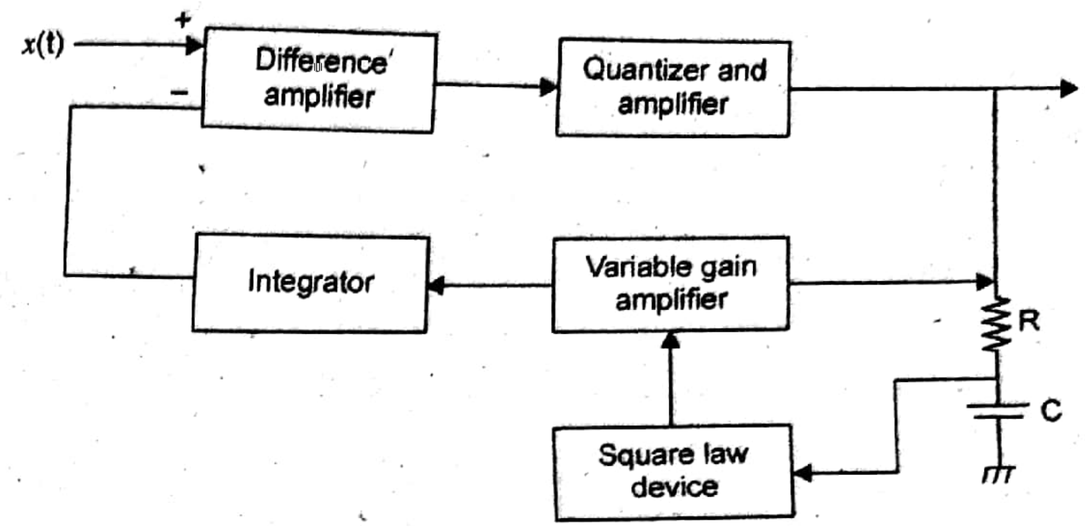

Adaptive delta modulation removes the problems found in the normal delta modulation.

In this type of modulation the mechanism is such that it changes the slope of stair case ramp signal according to the slope of input message signal.

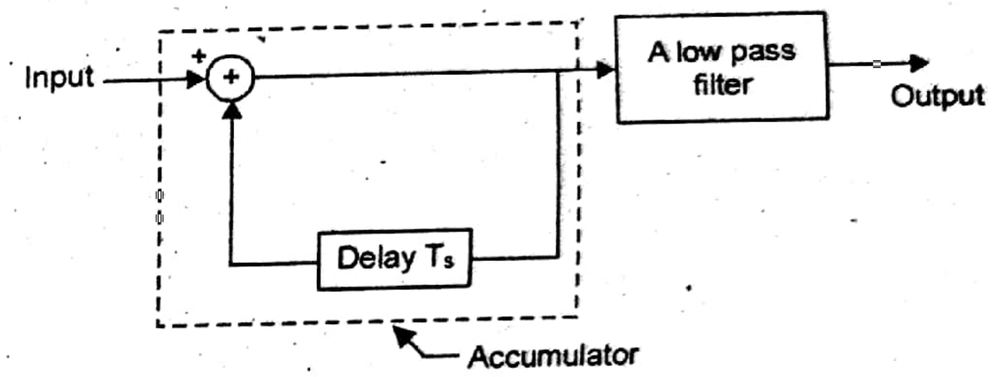

Working of adaptive delta modulation is depicted in the block diagram as given above.

The variable gain amplifier helps to change the amplitude of the stair case ramp signal.

Demodulation is easily achieved by the following circuit:

A delay of T_s is given by the circuit to make a synchronisation with that of transmitter. Low pass filter makes the changes smooth which matches with the original signal.

UNIT-II

Q. 4. The joint PDF of random variables X and Y is given by, (12.5)

$$f_{XY}(x,y) = \frac{1}{4} e^{-|x|-|y|} \quad \text{where } (-\infty < x < \infty, -\infty < y < \infty)$$

Determine:

(a) Whether the random variables X and Y are statistically independent.

(b) The probability that $X \le 1$ and $Y \le 0$.

Ans. (a) To decide if X and Y are statistically independent

The given joint PDF can bre represented as under:

$$f_{XY}(x,y) = \frac{1}{2}e^{-|x|}, \frac{1}{2}e^{-|y|} = f_X(x).f_Y(y)$$

Since the joint PDF is equal to the product of PDFs of individual random variables X and Y, these random variables are statistically dependent.

(b) To find the probability that $X \le 1$ and $Y \le 0$

$$P(X \le 1, Y \le 0) = \int_{-\infty}^{1}\int_{-\infty}^{0} f_{XY}(x,y)dx\,dy = \int_{-\infty}^{0}\int_{-\infty}^{1} \frac{1}{4} e^{-|x|}.e^{-|y|}dx\,dy$$

$$P(X \le 1, Y \le 0) = \int_{-\infty}^{0}\int_{-\infty}^{1} \frac{1}{2}e^{-|x|}.\frac{1}{2}e^{-|y|}dxdy = \int_{-\infty}^{1}\frac{1}{2}.e^{-|x|}dx.\int_{-\infty}^{0}\frac{1}{2}e^{-|y|}dy$$

$$P(X \le 1, Y \le 0) = \int_{-\infty}^{0}\frac{e^{-|y|}}{2}dy.\frac{1}{2}\left\{\int_{-\infty}^{0}e^{-x}dx + \int_{0}^{1}e^{-x}dx\right\}$$

$$P(X \le 1, Y \le 0) = \frac{1}{2}\left[e^{-|y|}\right]_{-\infty}^{0} \times \frac{1}{2}\left\{\left[\frac{e^{-x}}{-1}\right]_{-\infty}^{0} + \left[\frac{e^{-|x|}}{-1}\right]_{0}^{1}\right\}$$

$$P(X \le 1, Y \le 0) = -\frac{1}{2}\left[e^{-0} - e^{-\infty}\right] \times -\frac{1}{2}\left\{e^{-0} - e^{-\infty} - e^{-1} + e^{-0}\right\} = \frac{1}{4}[1+0]\times[2-e^{-1}]$$

$$P(X \le 1, Y \le 0) = \frac{1}{4}\left[2 - e^{-1}\right]$$

Q. 5. Define the stationary and non-stationary random processes. Also, drive the expression for power spectral density of wide sense stationary process. **(12.5)**

Ans. The concept of stationary plays an important role in solving practical problems involving random processes. Just like time-invariance is an important characteristic of many deterministic systems, stationarity describes certain time-invariant property of a class of random processes. Stationarity also leads to frequency-domain description of a random process.

Strict-sense Stationary Process

A random process {X(t)} is called *strict-sense stationary* (SSS) if its probability structure is invariant with time. In terms of the joint distribution function {X(t)} is called SSS if

$$F_{X(t_1)X(t_2),\ldots,X(t_n)}(X_1, X_2,\ldots,X_n) = F_{X(t_1+t_0),X(t_2+t_0),\ldots,X(t_n+t_0)}(X_1, X_2,\ldots,X_n)$$

$\forall n \in N, \forall t_0 \in \Gamma$ and for all choices of sample points $t_1, t_2,\ldots t_n \in \Gamma$.

Thus, the joint distribution functions of any set of random variables $X(t_1), X(t_2) \ldots X(t_n)$ does not depend on the placement of the origin of the time axis. This requirement is a very strict. Less strict form of stationarity may be defined.

Particularly,

if $F_{X(t_1),X(t_2)\ldots X(t_n)}(X_1, X_2\ldots X_n) = F_{X(t_1+t_0),X(t_2+t_0)\ldots X(t_n+t_0)}(X_1, X_2\ldots X_n)$ *for* $n = 1, 2,\ldots, k$, *then* {X(t)} is called k^{th} order stationary.

{X(t)} is called kth *order stationary* does not depend on the placement of the origin of the time axis. This requirement is a very strict. Less strict form of stationarity may be defined.

Definition of Power Spectral Density of a WSS Process

Let us define

$$X_T(t) = X(t) \quad -T < t < T$$
$$= 0 \quad \text{otherwise}$$
$$= X(t)\text{rect}\left(\frac{t}{2T}\right)$$

where $\text{rect}\left(\frac{t}{2T}\right)$ is the unity-amplitude rectangular pulse of width $2T$ centering the origin. As $t \to \infty$, $X_T(t)$ will represent the random process X(t)

Define the mean-square integral

$$FTX_T(\omega) = \int_{-T}^{T} X_T(t)e^{-j\omega t}dt$$

Applying the Pareseval's theorem we find the energy of the signal

$$\int_{-T}^{T} X_T^2(t)dt = \int_{-\infty}^{\infty} |FTX_T(\omega)|^2\, d\omega.$$

Therefore, the power associated with $X_T(t)$ is

$$\frac{1}{2T}\int_{-T}^{T} X_T^2(t)dt = \frac{1}{2T}\int_{-\infty}^{\infty} |FTX_T(\omega)|^2\, d\omega \text{ and}$$

The average power is given by

$$\frac{1}{2T}E\int_{-T}^{T} X_T^2(t)dt = \frac{1}{2T}E\int_{-\infty}^{\infty} |FTX_T(\omega)|^2\, d\omega = E\int_{-\infty}^{\infty}\frac{|FTX_T(\omega)|^2}{2T}\, d\omega$$

where $\frac{E|FTX_T(\omega)|^2}{2T}$ is the contribution to the average power at frequency ω and represents the power spectral density for $X_1(t)$ $T \to \infty$As the left-hand side in the above expression represents the average power of X(t). Therefore, the PSD $S_X(\omega)$ of the process X(t) is defined in the limiting sense by

$$S_X(\omega) = \lim_{T\to\infty}\frac{E|FTX_T(\omega)|^2}{2T}$$

UNIT-III

Q. 6. What is Matched filter? Derive an expression for probability of error of a Matched filter receiver. **(12.5)**

Ans. A receiver structure using the matched filter is shown by a simple diagram given as follow:

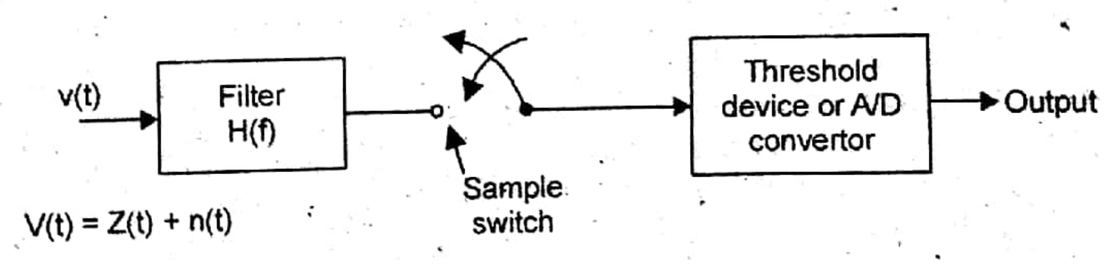

Signal is passed through the filter having transfer function H(*f*) which optimizes the performance of the receiver.

The sample switch turns on only at the time of incoming of the signal which also improves the signal to noise ratio. Threshold device works on the predefined values and accordingly produces output.

Bit error probability is calculated on the following facts:

$$P_e = P\{b_k = 0 \text{ and } V_o(KT_b) \geq T_o\};$$

or

$$b_k = 1 \text{ and } V_o(kT_b) < T_o]$$

$$= \frac{1}{2}P\{V_o(KT_b)\} \geq T_o|b_{k=0}\} + \frac{1}{2}P\{V_o(KT_b) < T_o|b_k = 1\}$$

$$\Rightarrow \quad P_e = \frac{1}{2}\int_{T_o}^{\infty}\frac{1}{\sqrt{2\pi N_o}}\exp\left(-\frac{(V_o - So_1)^2}{2No}\right)dv_o + \frac{1}{2}\int_{\infty}^{T_o}\frac{1}{\sqrt{2\pi No}}\exp\left(\frac{-(V_o - So_2)^2}{2No}\right)dvo$$

and the conditional pdf's for V_0 is given as follow:

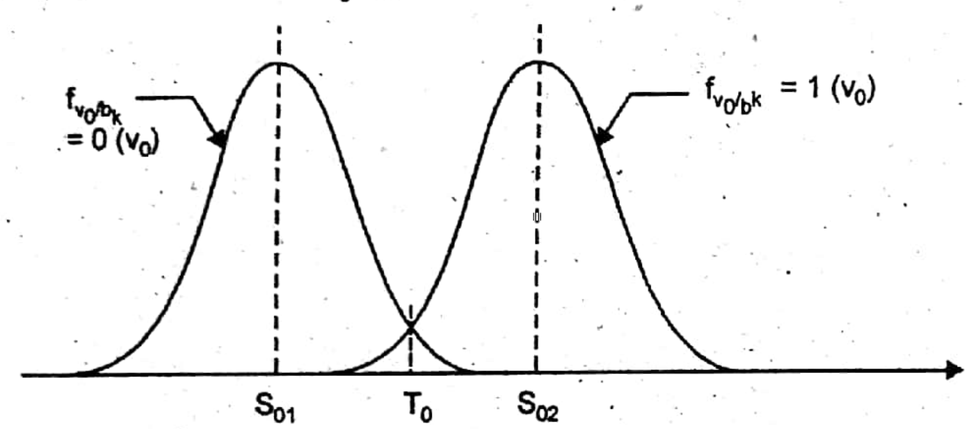

When the average value of the signal is taken into account then

$$P_e = \int_{\frac{\int S_1 + So_2}{2}}^{\infty}\frac{1}{\sqrt{2\pi N_o}}\exp\left(-\frac{(V_o - So_1)^2}{2No}\right)dv_o$$

$$= \int_{\left(\frac{So_2 - So_1}{2\sqrt{N_o}}\right)}^{\infty}\frac{1}{\sqrt{2\pi N.}}\exp\left(-\frac{2^2}{2}\right)dz$$

Q. 7. Explain briefly Inter Symbol Interference. How does the use of Nyquist impulse response of the overall communication system avoid the occurrence of Inter Symbol Interference? (12.5)

Ans. In telecommunication, **intersymbol interference (ISI)** is a form of distortion of a signal in which one symbol interferes with subsequent symbols. This is an unwanted phenomenon as the previous symbols have similar effect as noise, thus making the communication less reliable. The spreading of the pulse beyond its allotted time interval causes it to interfere with neighboring pulses. ISI is usually caused by multipath propagation or the inherent non-linear frequency response of a channel causing successive symbols to "blur" together.

The presence of ISI in the system introduces errors in the decision device at the receiver output. Therefore, in the design of the transmitting and receiving filters, the objective is to minimize the effects of ISI, and thereby deliver the digital data to its destination with the smallest error rate possible.

Ways to fight intersymbol interference include adaptive equalization and error correcting codes

One way to study ISI in a PCM or data transmission system experimentally is to apply the received wave to the vertical deflection plates of an oscilloscope and to apply a sawtooth wave at the transmitted symbol rate R (R = 1/T) to the horizontal deflection plates. The resulting display is called an eye pattern because of its resemblance to the human eye for binary waves. The interior region of the eye pattern is called the eye opening. An eye pattern provides a great deal of information about the performance of the pertinent system.

1.The width of the eye opening defines the time interval over which the received wave can be sampled without error from ISI. It is apparent that the preferred time for sampling is the instant of time at which the eye is open widest.

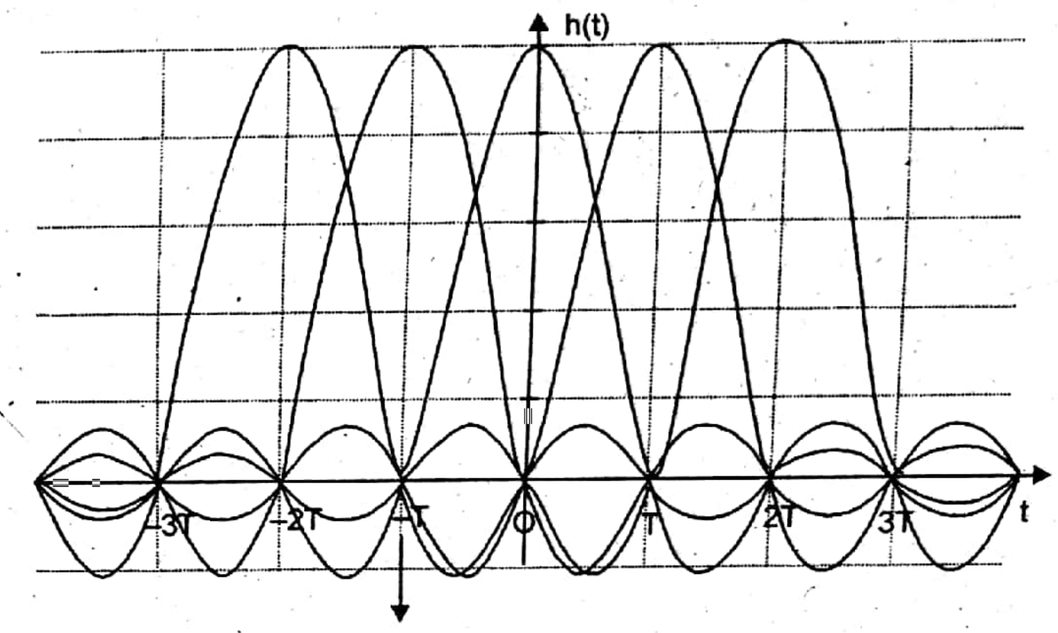

2. The sensitivity of the system to timing error is determined by the rate of closure of the eye as the sampling time is varied.

3. The height of the eye opening, at a specified sampling time, defines the margin over noise

The noise margin- the amount of noise required to cause the receiver to get an error - is given by the distance between the signal and the zero amplitude point at the sampling time; in other words, the further from zero at the sampling time the signal is the better. For the signal to be correctly interpreted, it must be sampled somewhere between the two points where the zero-to-one and one-to-zero transitions cross. Again, the further apart these points are the better, as this means the signal will be less sensitive to errors in the timing of the samples at the receiver.

There are several techniques in telecommunication and data storage that try to work around the problem of intersymbol interference.

- Design systems such that the impulse response is short enough that very little energy from one symbol smears into the next symbol.

Consecutive raised-cosine impulses, demonstrating zero-ISI property

- Separate symbols in time with guard periods.
- Apply an equalizer at the receiver, that, broadly speaking, attempts to undo the effect of the channel by applying an inverse filter.

Apply a sequence detector at the receiver, that attempts to estimate the sequence of transmitted symbols using the Viterbi algorithm.

UNIT-IV

Q. 8. Explain the concept of modulation and demodulation of Differential PSK with the help of neat diagrams. How is it different from DEPSK? (12.5)

Ans. In **Differential Phase Shift Keying (DPSK)** the phase of the modulated signal is shifted relative to the previous signal element. No reference signal is considered here. The signal phase follows the high or low state of the previous element. This DPSK technique doesn't need a reference oscillator.

The following figure represents the model waveform of DPSK.

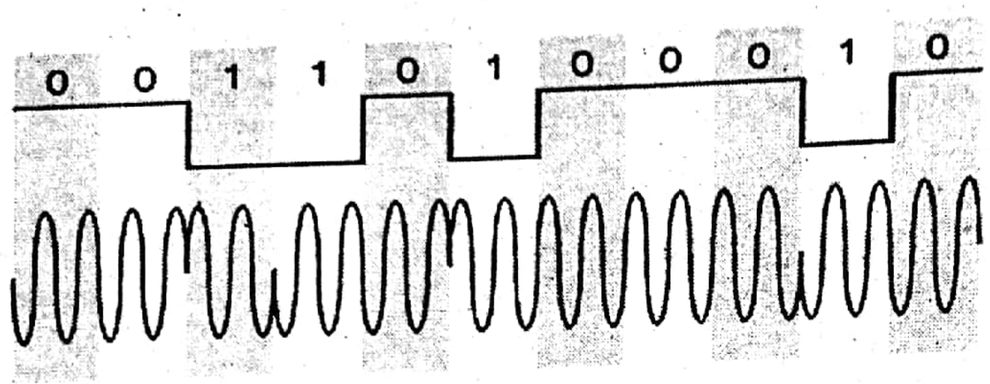

It is seen from the above figure that, if the data bit is Low i.e., 0, then the phase of the signal is not reversed, but continued as it was. If the data is a High i.e., 1, then the phase of the signal is reversed, as with NRZI, invert on 1 (a form of differential encoding).

If we observe the above waveform, we can say that the High state represents an **M** in the mod lating signal and the Low state represents a **W** in the modulating signal.

DPSK Modulator: DPSK is a technique of BPSK, in which there is no reference phase signal. Here, the transmitted signal itself can be used as a reference signal. Following is the diagram of DPSK Modulator.

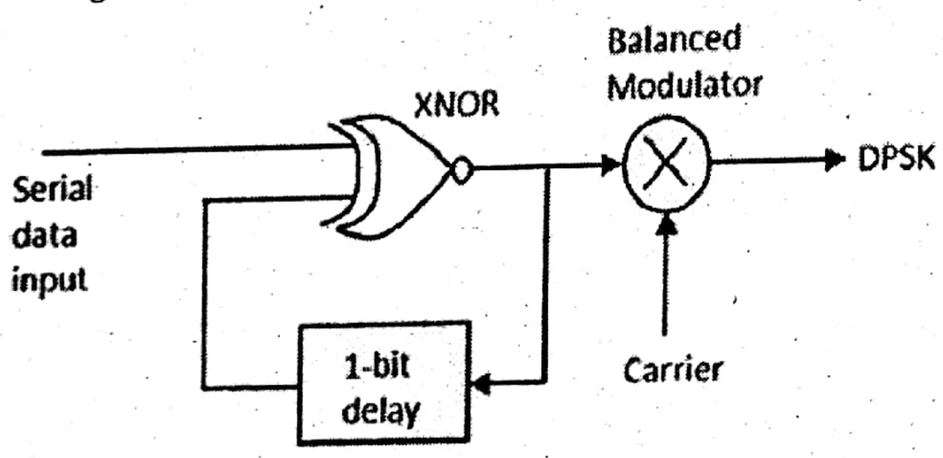

DPSK Modulator

DPSK encodes two distinct signals, i.e., the carrier and the modulating signal with 180° phase shift each. The serial data input is given to the XNOR gate and the output is again fed back to the other input through 1-bit delay. The output of the XNOR gate along with the carrier signal is given to the balance modulator, to produce the DPSK modulated signal.

DPSK Demodulator: In DPSK demodulator, the phase of the reversed bit is compared with the phase of the previous bit. Following is the block diagram of DPSK demodulator.

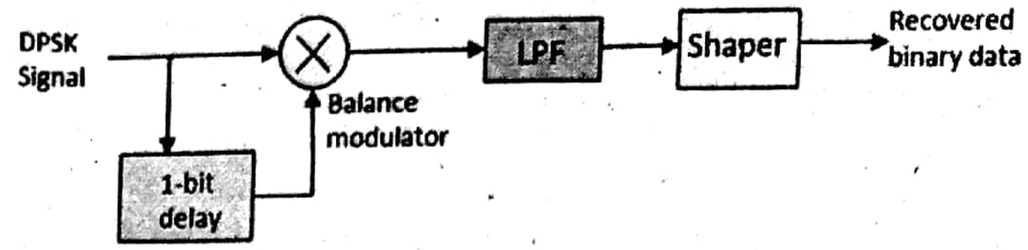

From the above figure, it is evident that the balance modulator is given the DPSK signal along with 1-bit delay input. That signal is made to confine to lower frequencies with the help of LPF. Then it is passed to a shaper circuit, which is a comparator or a Schmitt trigger circuit, to recover the original binary data as the output.

The transmitter (modulator) of a DEPSK system is identical to the DPSK transmitter however receiver is completely different.

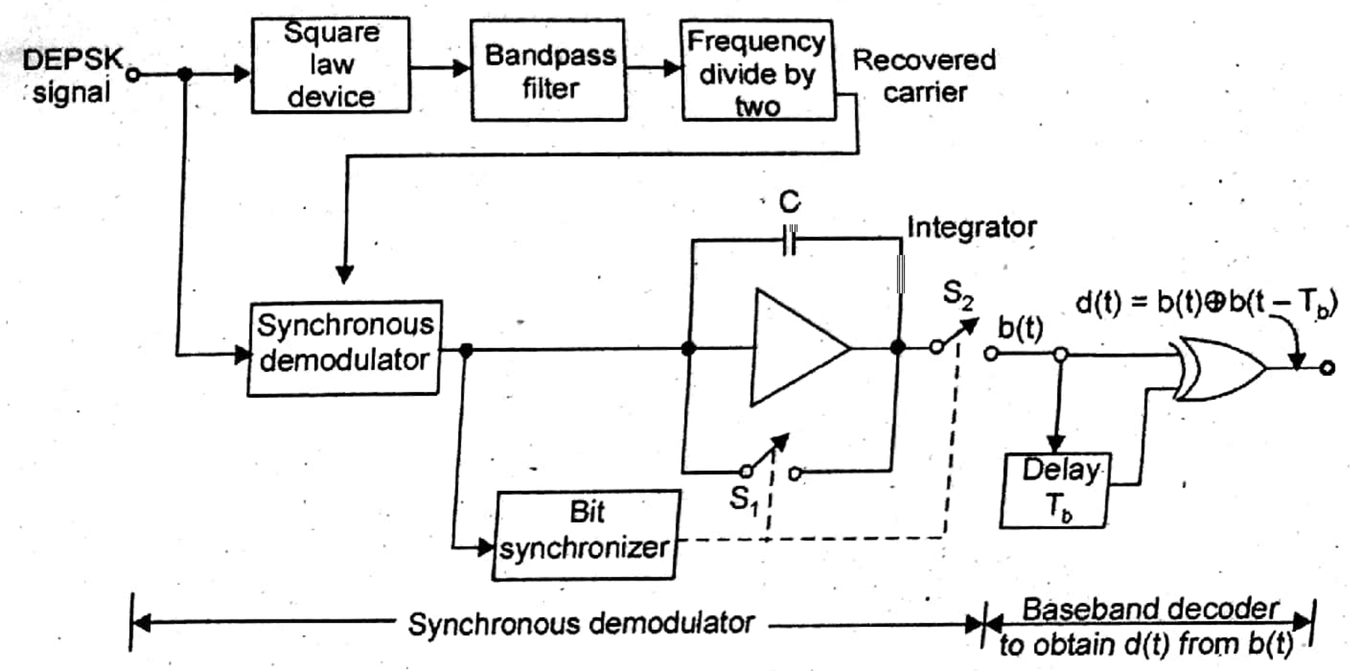

Fig. Receiver block diagram of DEPSK system

Advantages of DEPSK

(i) The DEPSK system uses the synchronous or coherent type of detection. Hence, the probability of error is reduced. It is less than the probability of error for the DPSK system because DPSK system uses the non coherent type demodulation technique.

(ii) In DPSK demodulator, the delay generating device (T_b) has to operate at the carrier frequency but in DEPSK demodulator, the delay device operates at the baseband frequency f_b. This reduces the hardware cost of the delay device.

Drawbacks of DEPSK

(i) Complex demodulator is required. The complexity of the receiver increases because the synchronous demodulation is being used.

(ii) The errors occur in pairs as explained below. Thus, one error in b(t) will give rise to two errors in $d(t)$.

Q.9. Define Minimum Shift Keying (MSK). Derive the expression for probability of error for MSK. (12.5)

Ans. Minimum shift keying, MSK, is a form frequency modulation based on a system called continuous-phase frequency-shift keying.Minimum shift keying, MSK offers advantages in terms of spectral efficiency when compared to other similar modes, and

Apply a sequence detector at the receiver, that attempts to estimate the sequence of transmitted symbols using the Viterbi algorithm.

UNIT-IV

Q. 8. Explain the concept of modulation and demodulation of Differential PSK with the help of neat diagrams. How is it different from DEPSK? (12.5)

Ans. In **Differential Phase Shift Keying (DPSK)** the phase of the modulated signal is shifted relative to the previous signal element. No reference signal is considered here. The signal phase follows the high or low state of the previous element. This DPSK technique doesn't need a reference oscillator.

The following figure represents the model waveform of DPSK.

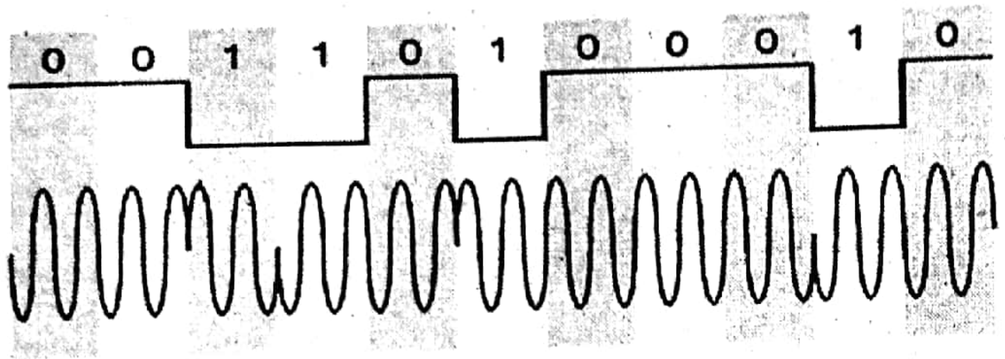

It is seen from the above figure that, if the data bit is Low i.e., 0, then the phase of the signal is not reversed, but continued as it was. If the data is a High i.e., 1, then the phase of the signal is reversed, as with NRZI, invert on 1 (a form of differential encoding).

If we observe the above waveform, we can say that the High state represents an **M** in the mod lating signal and the Low state represents a **W** in the modulating signal.

DPSK Modulator: DPSK is a technique of BPSK, in which there is no reference phase signal. Here, the transmitted signal itself can be used as a reference signal. Following is the diagram of DPSK Modulator.

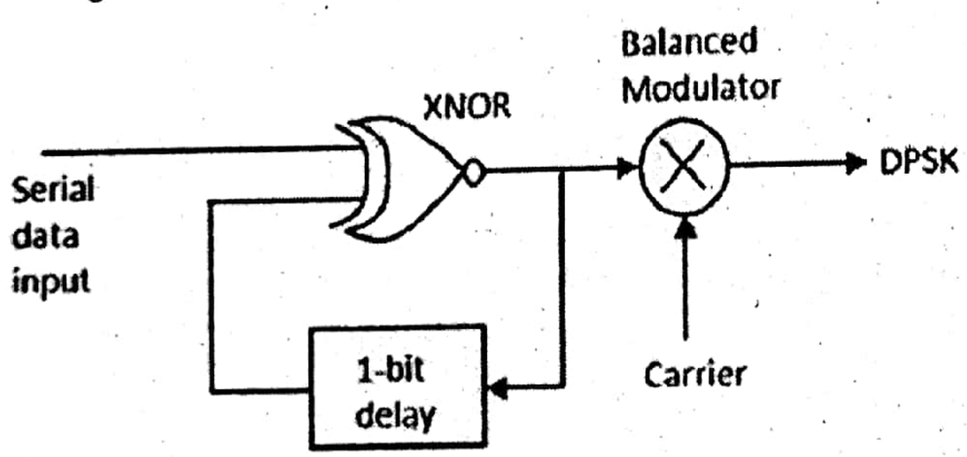

DPSK Modulator

DPSK encodes two distinct signals, i.e., the carrier and the modulating signal with 180° phase shift each. The serial data input is given to the XNOR gate and the output is again fed back to the other input through 1-bit delay. The output of the XNOR gate along with the carrier signal is given to the balance modulator, to produce the DPSK modulated signal.

DPSK Demodulator: In DPSK demodulator, the phase of the reversed bit is compared with the phase of the previous bit. Following is the block diagram of DPSK demodulator.

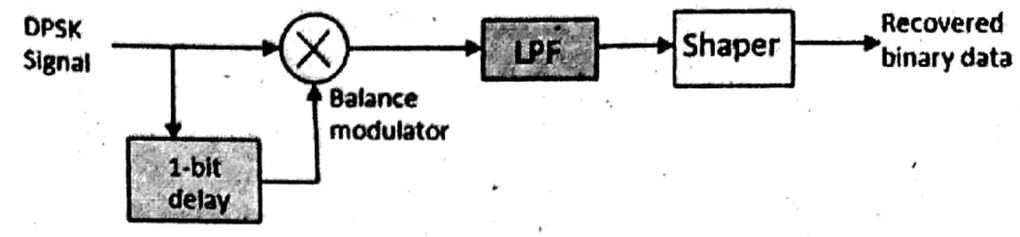

From the above figure, it is evident that the balance modulator is given the DPSK signal along with 1-bit delay input. That signal is made to confine to lower frequencies with the help of LPF. Then it is passed to a shaper circuit, which is a comparator or a Schmitt trigger circuit, to recover the original binary data as the output.

The transmitter (modulator) of a DEPSK system is identical to the DPSK transmitter however receiver is completely different.

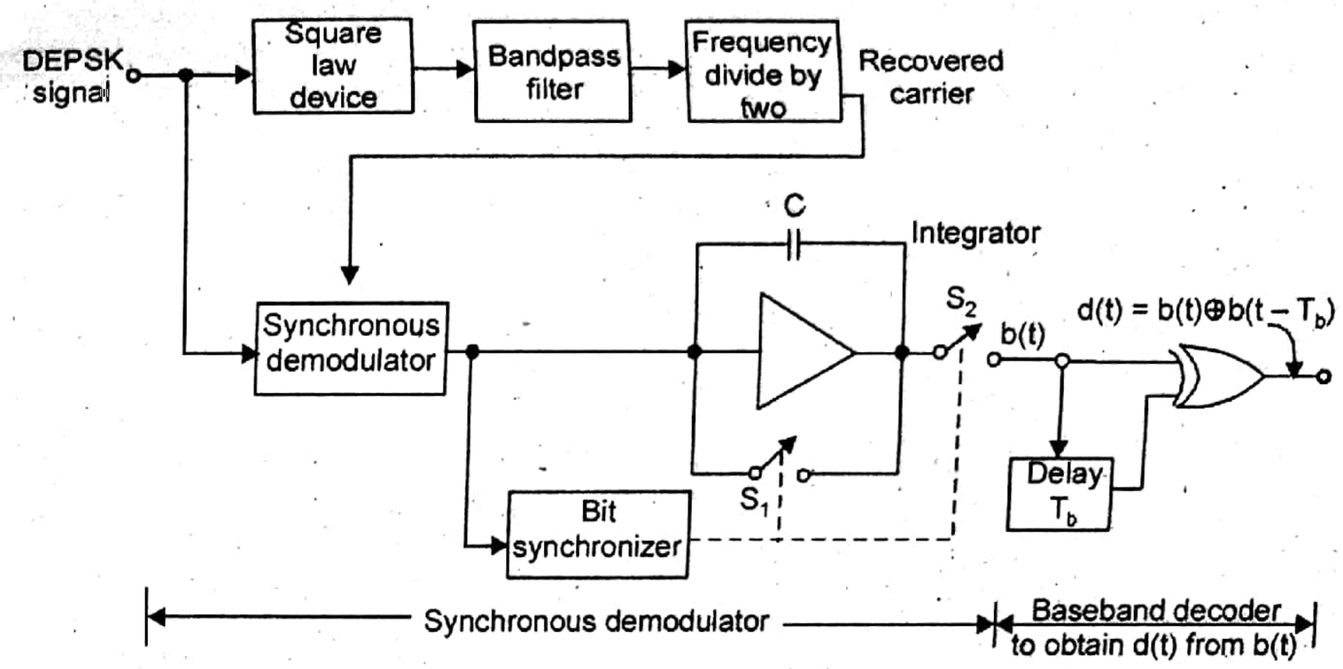

Fig. Receiver block diagram of DEPSK system

Advantages of DEPSK

(i) The DEPSK system uses the synchronous or coherent type of detection. Hence, the probability of error is reduced. It is less than the probability of error for the DPSK system because DPSK system uses the non coherent type demodulation technique.

(ii) In DPSK demodulator, the delay generating device (T_b) has to operate at the carrier frequency but in DEPSK demodulator, the delay device operates at the baseband frequency f_b. This reduces the hardware cost of the delay device.

Drawbacks of DEPSK

(i) Complex demodulator is required. The complexity of the receiver increases because the synchronous demodulation is being used.

(ii) The errors occur in pairs as explained below. Thus, one error in b(t) will give rise to two errors in $d(t)$.

Q.9. Define Minimum Shift Keying (MSK). Derive the expression for probability of error for MSK. (12.5)

Ans. Minimum shift keying, MSK, is a form frequency modulation based on a system called continuous-phase frequency-shift keying.Minimum shift keying, MSK offers advantages in terms of spectral efficiency when compared to other similar modes, and

it also enables power amplifiers to operate in saturaton enabling them to provide high levels of efficiency.

Reason for Minimum Shift Keying, MSK: It is found that binary data consisting of sharp transitions between "one" and "zero" states and vice versa potentially creates signals that have sidebands extending out a long way from the carrier, and this creates problems for many radio communications systems, as any sidebands outside the allowed bandwidth cause interference to adjacent channels and any radio communications links that may be using them. MSK, minimum shift keying has the feature that there are no phase discontinuities and this significantly reduces the bandwidth needed over other forms of phase and frequency shift keying.

The problem can be overcome in part by filtering the signal, but is found that the transitions in the data become progressively less sharp as the level of filtering is increased and the bandwidth reduced. To overcome this problem GMSK is often used and this is based on Minimum Shift Keying, MSK modulation. The advantage of which is what is known as a continuous phase scheme. Here there are no phase discontinuities because the frequency changes occur at the carrier zero crossing points.

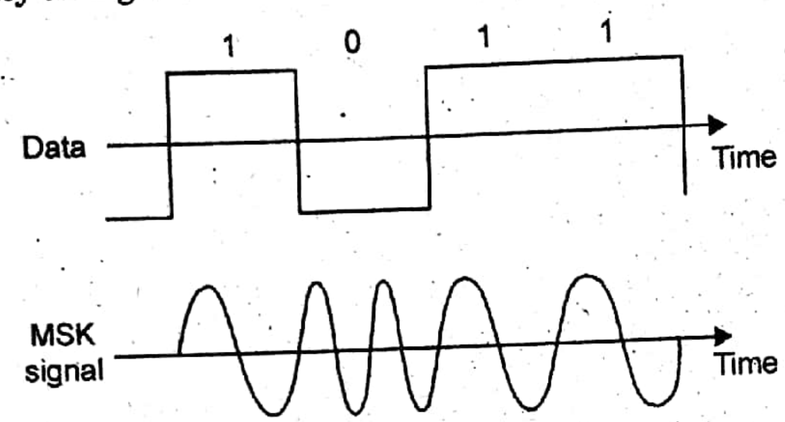

Concept of a minimum shift keying, MSK signal

Probability of Error

Binary FSK

It is given by $Q\left(\sqrt{E_b/N_0}\right)$

MSK

MSK has one of two possible frequencies over any symbol interval.

$$s(t) = A\cos\left[2\pi f_e + \pi x_k(2T)t + \pi/2\sum_{n=-\infty}^{k-1} x_n - \pi/2kx_k\right]$$

where $kT \le t \le (k+1)T$

Consider interval $0 \le t \le T_b$ and denote $A = \sqrt{2E_b/T_b}$. Then

$$\beta(t) = \begin{cases} \sqrt{2E_b/T_b}\cos(2\pi f_1 t + \theta(0)) \text{ symbol } 1 \\ \sqrt{2E_b/T_b}\cos(2\pi f_2 t + \theta(0)) \text{ symbol } 0 \end{cases}$$

On first guess one may conclude that MSK has the same error probability as BFSK, but since it has memory of phase it does better. Using phase trellis it can be shown that $P_e \approx Q\left(\sqrt{2E_b/T_b}\right)$. The approximation is valid for high SNR values. Therefore. MSK is approximately same in BER performance as BPSK.