Realtex_AX3000_V00

Schematics Document

REV:V10

2026-03-30

http://www.banana-pi.org	GUANGDONG BIPAI KEJI CPA.LTD		
	Design Name: BPI-RT2-RTL8198D		
	Size: A4	Page Name: P01_FACE	Rev: V10
	Date: Monday, March 30, 2026	Sheet 1 of 12	

BPI-RT2 Version Description & Update

Versions	Versions Description & Upadte	Date
V00		20251103
V10		20260330

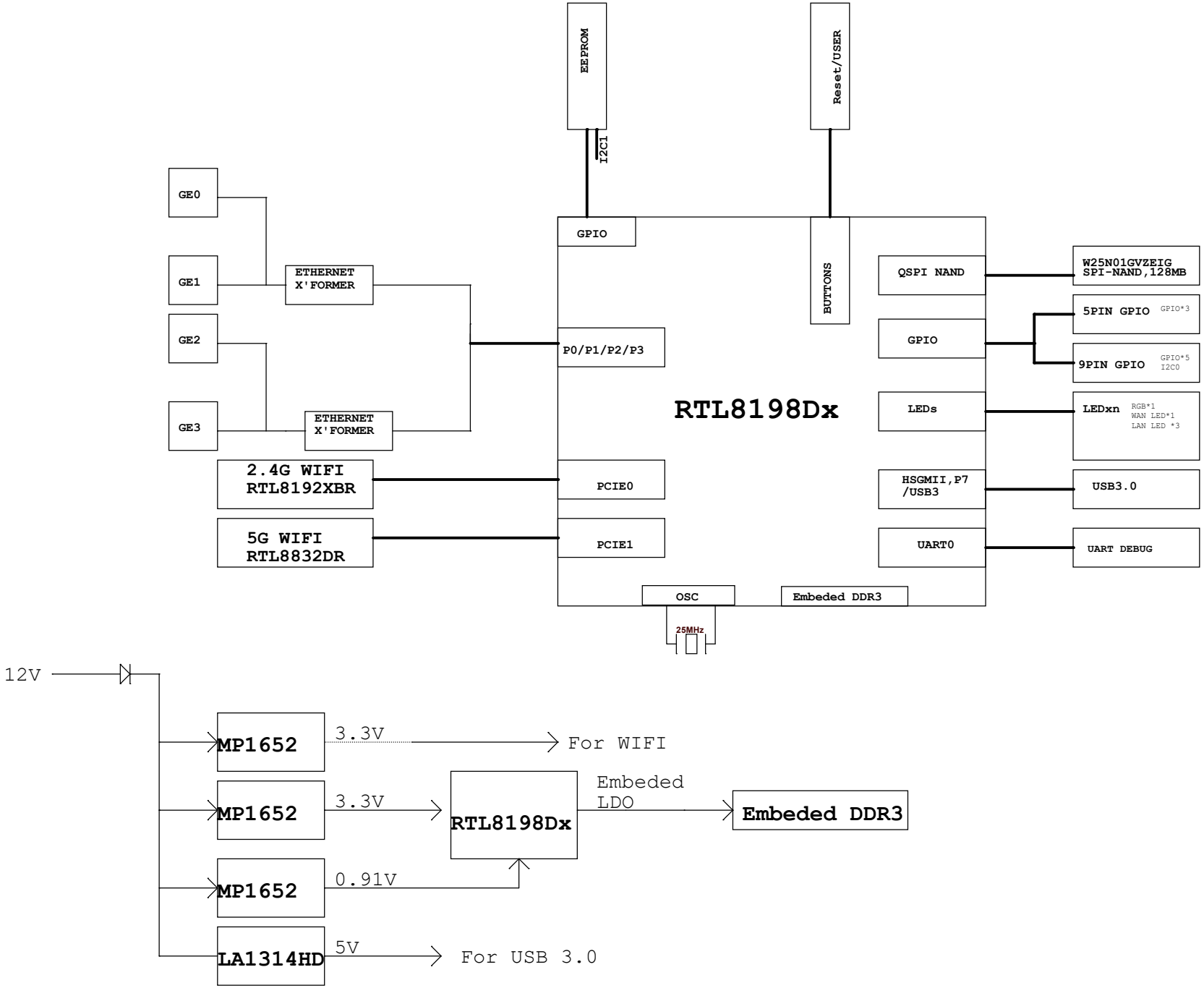

GUANGDONG BIPAI KEJI CPA.LTD			
Design Name: BPI-RT2-RTL8198D			
Size: A3	Page Name: P03_SYS_Block		Rev: V10
Date: Thursday, April 02, 2026	Sheet 3 of 12		

http://www.banana-pi.org

DCIN: 12V

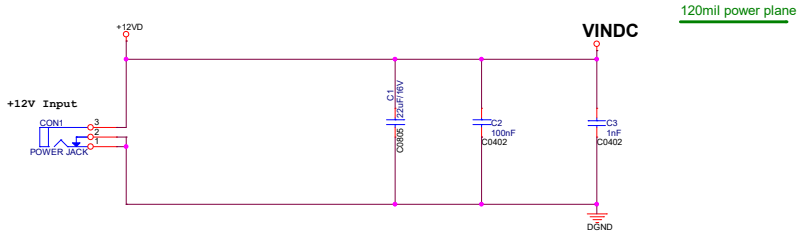

Power of CORE 0.91V

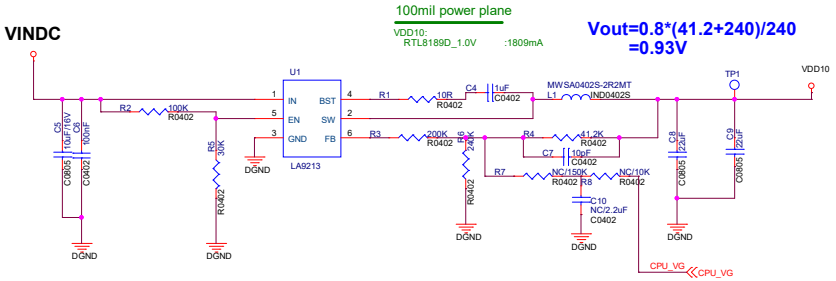

Power of CORE & WiFi 3.3V

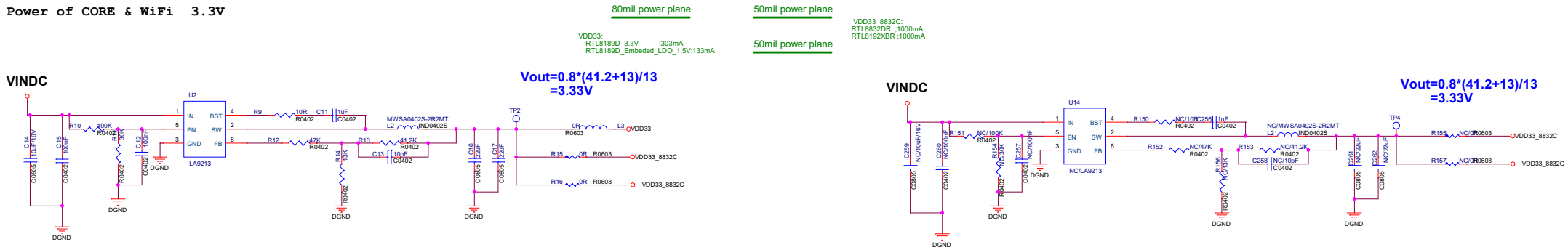

Power of I/O 5V

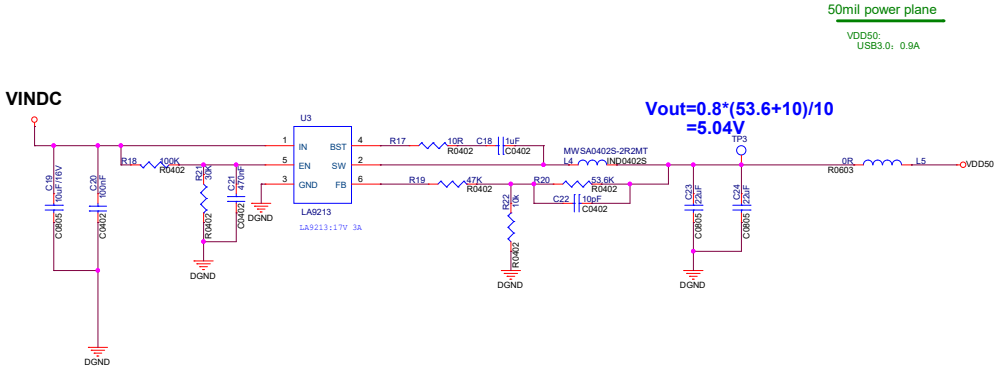

bpi http://www.banana-pi.org	GUANGDONG BIPAI KEJI CPA.LTD		
	Design Name: BPI-RT2-RTL8198D		
	Size: A2	Page Name: P04_Power_BULK	Rev: V10
	Date: Thursday, April 02, 2026	Sheet 4 of 12	

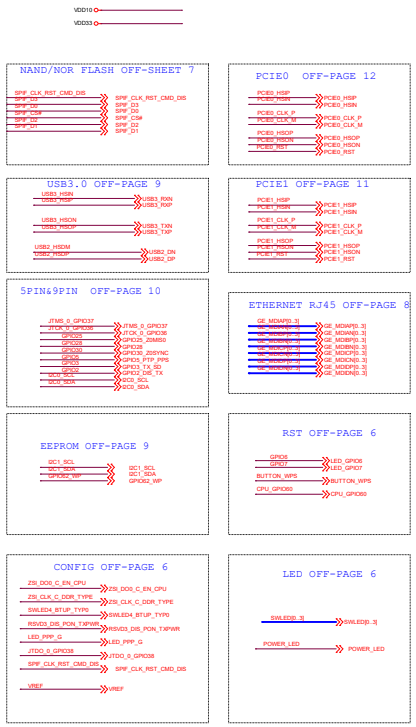

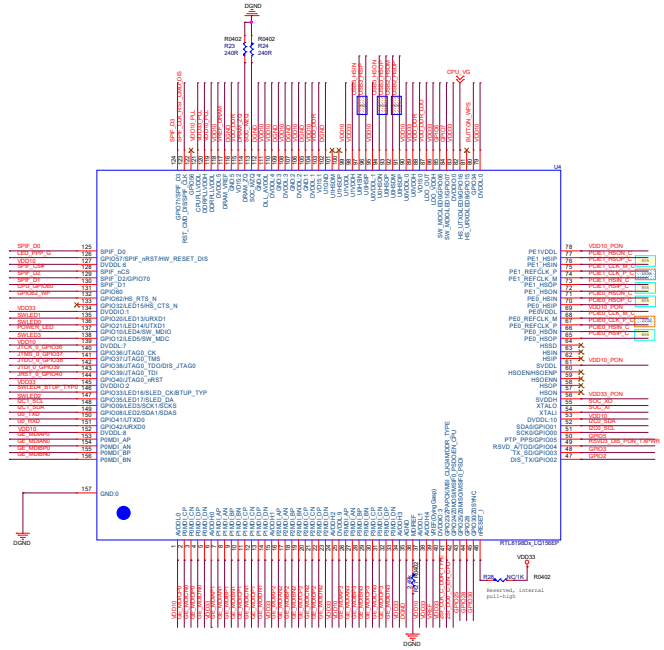

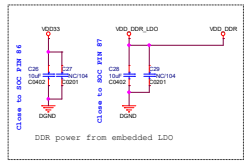

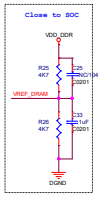

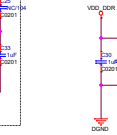

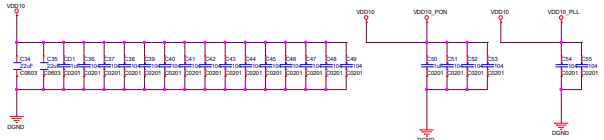

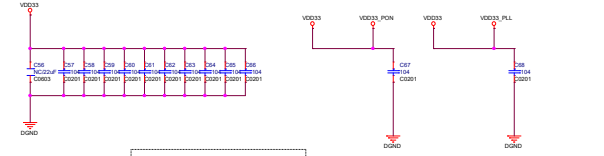

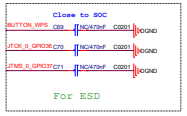

Debug UART

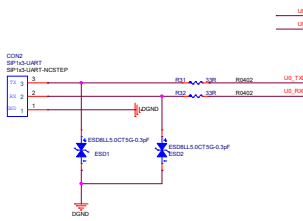

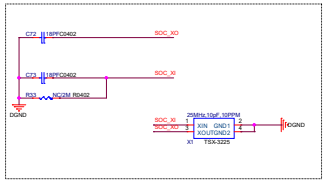

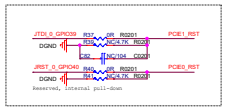

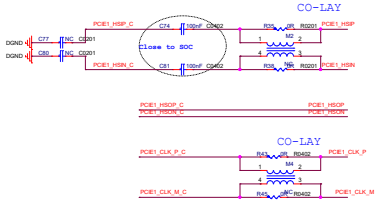

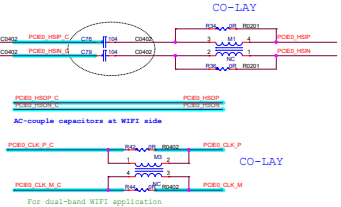

GUANGDONG BIPAI KEJI CPA.LTD			
Design Name	BPI-RT2-RTL8198D		
Size A1	Page Name P05_SOC_RTL8198DX		Rev V10
Date: Thursday, April 09, 2026	Sheet 5 of 12		

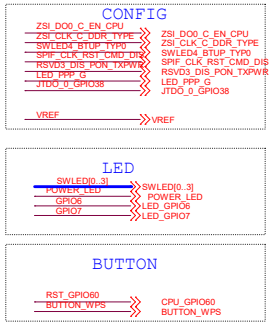

Config

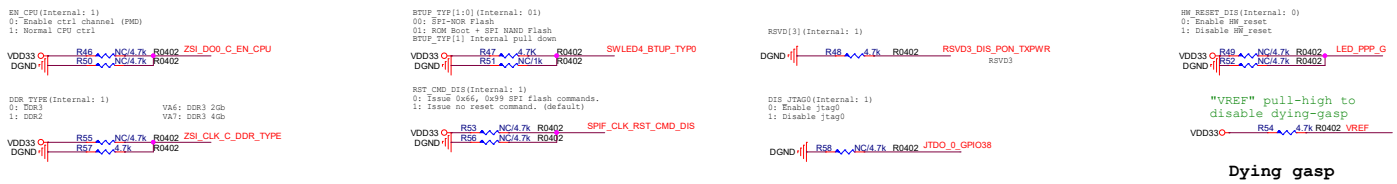

Dying gasp

LED

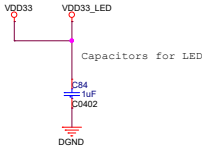

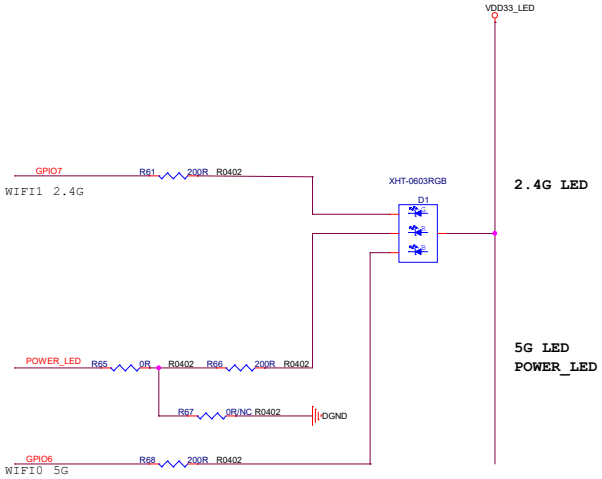

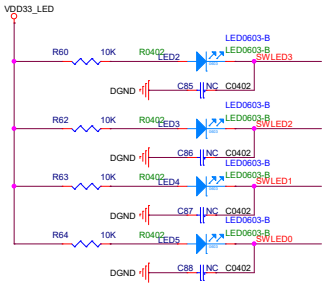

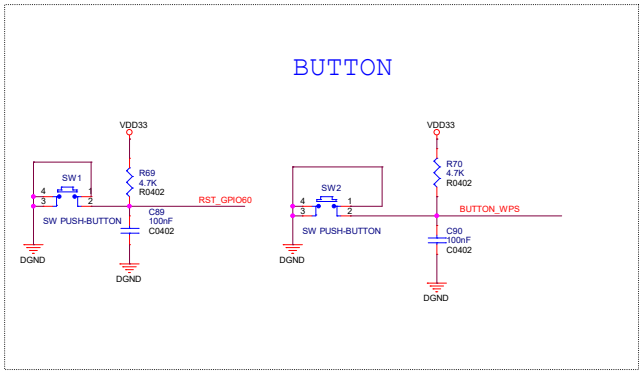

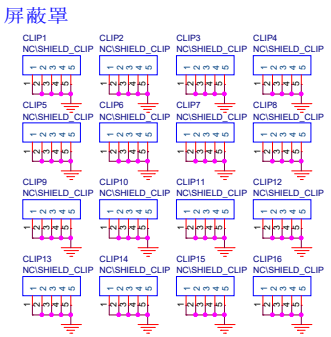

bpi http://www.banana-pi.org	GUANGDONG BIPAI KEJI CPA.LTD		
	Design Name: BPI-RT2-RTL8198D		
	Size: A2	Page Name: P06_IO_LED_CONFIGURE	Rev: V10
	Date: Thursday, April 02, 2026	Sheet 6 of 12	

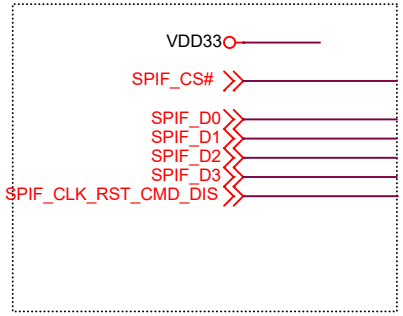

SPI NAND FLASH

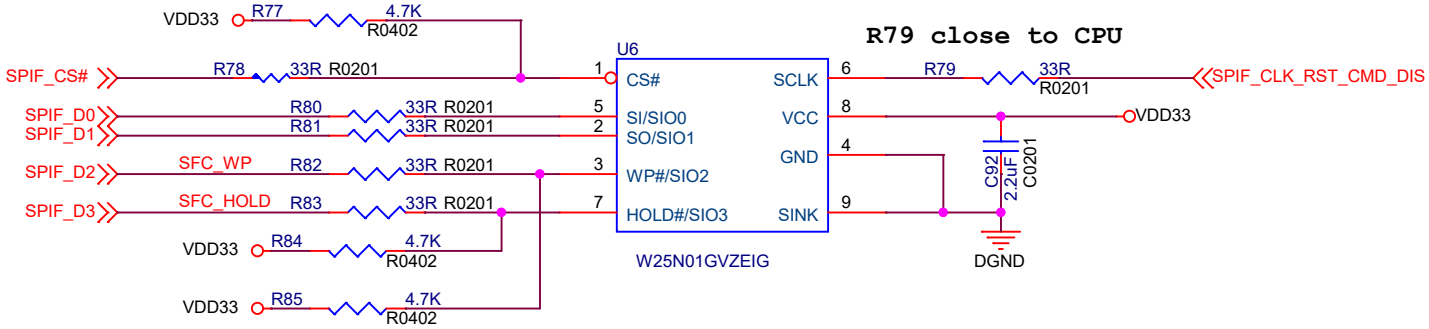

R80,R81,R82 R83close to FLASH

Boot Strapping Pin Name	Description	Boot Sequence
BTUP_TYP0	Boot mode	0:NOR 1:NAND

http://www.banana-pi.org	GUANGDONG BIPAI KEJI CPA.LTD	
	Design Name: BPI-RT2-RTL8198D	
	Size: A4	Page Name: P07_MEMORY_FLASH	Rev: V10
	Date: Thursday, April 02, 2026	Sheet 7 of 12

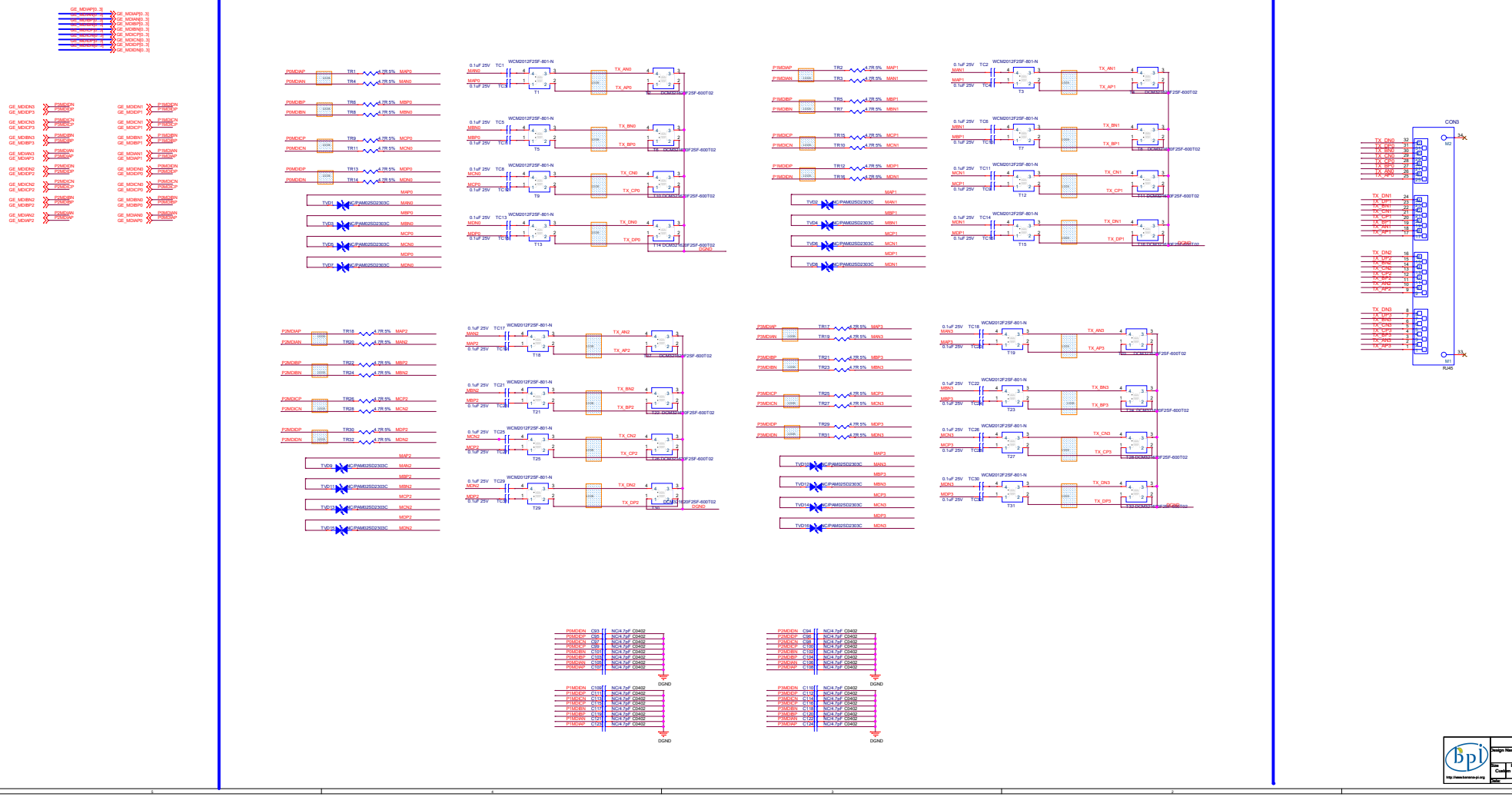

GUANGDONG BIPAI KEJI CPALTD

Design Name: BPI-RT2-RTL8198D

Size: Custom | Page Name: P08_TRANSFM_RJ45 | Rev: V10

http://www.bipaiproject.org

Date: Thursday, April 02, 2026 | Sheet 8 of 12

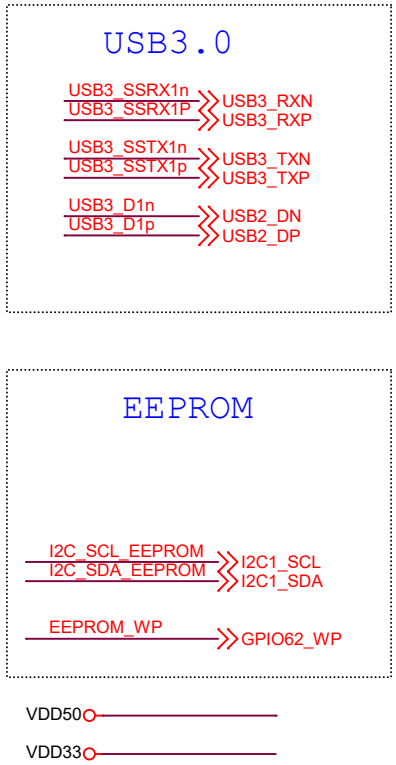

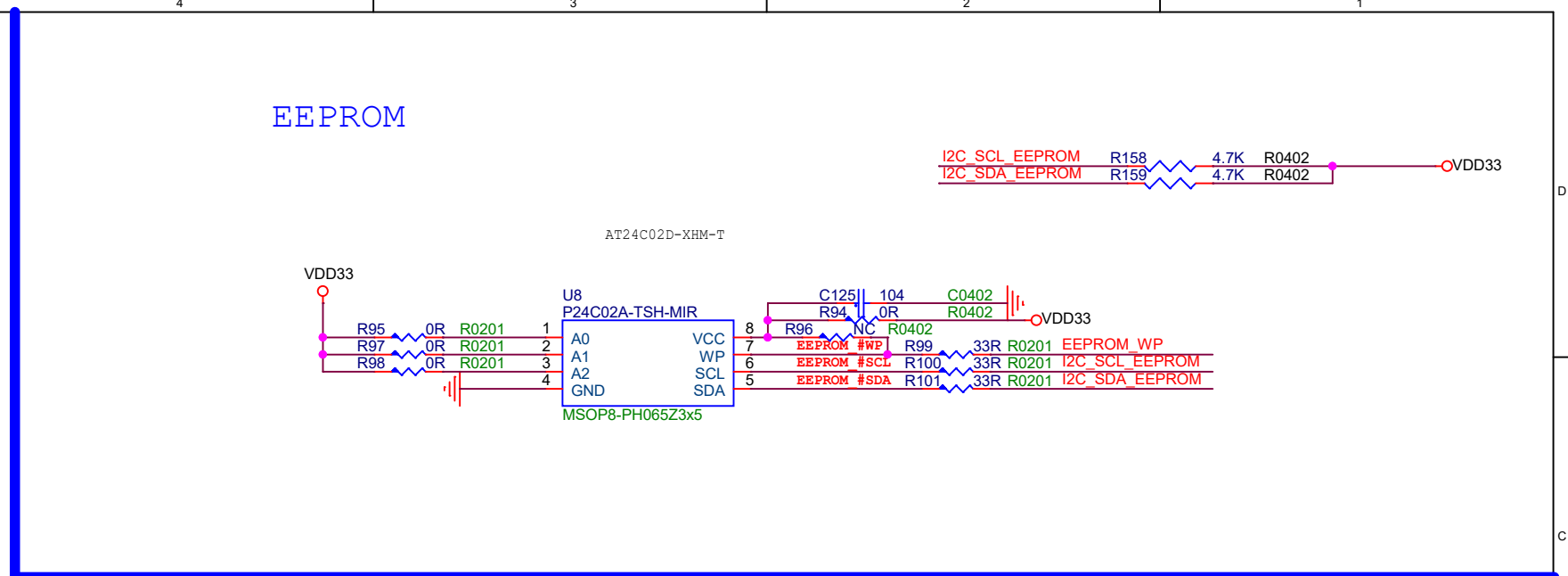

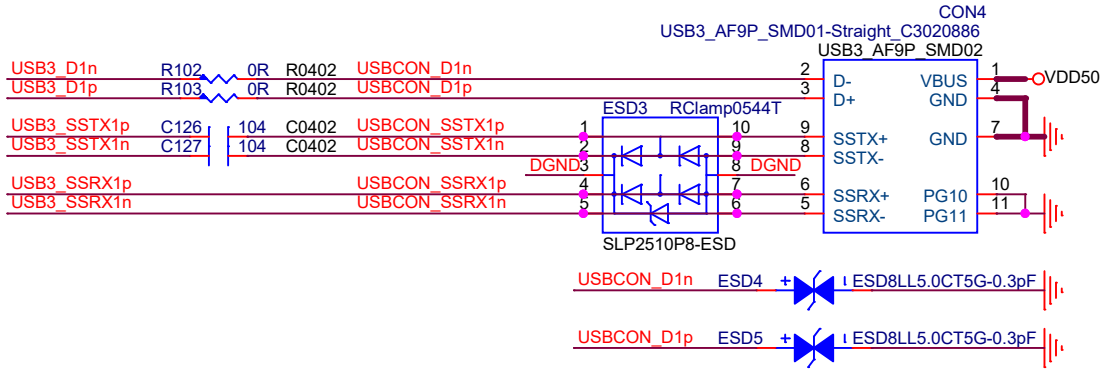

http://www.banana-pi.org	GUANGDONG BIPAI KEJI CPA.LTD		
	Design Name: BPI-RT2-RTL8198D		
Size: A4	Page Name: P09_USB3_EEPROM		Rev: V10
Date: Thursday, April 02, 2026	Sheet 9 of 12		

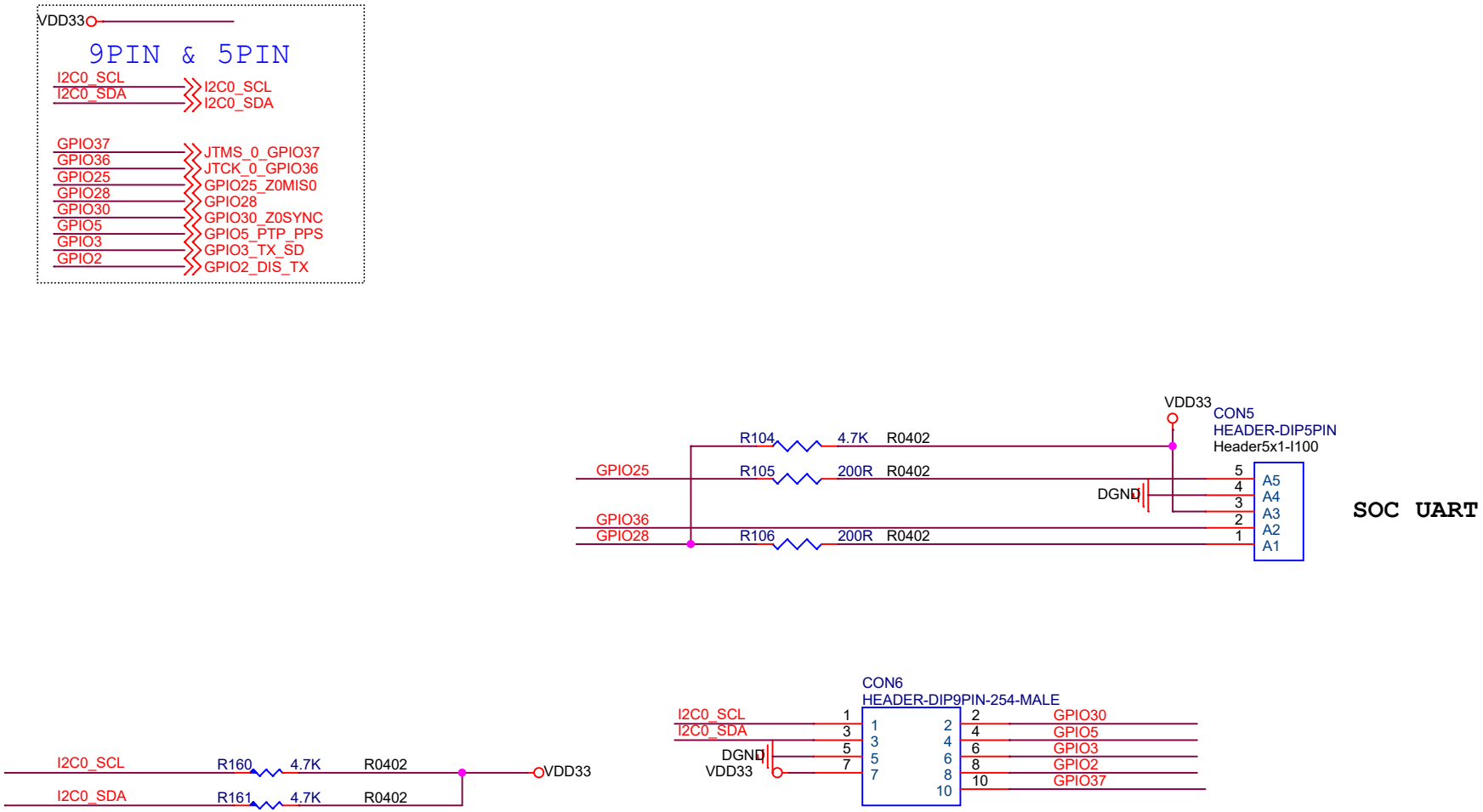

http://www.banana-pi.org	GUANGDONG BIPAI KEJI CPA.LTD		
	Design Name: BPI-RT2-RTL8198D		
	Size: A4	Page Name: P10_5PIN_9PIN_GPIO	Rev: V10
	Date: Thursday, April 02, 2026	Sheet 10 of 12	

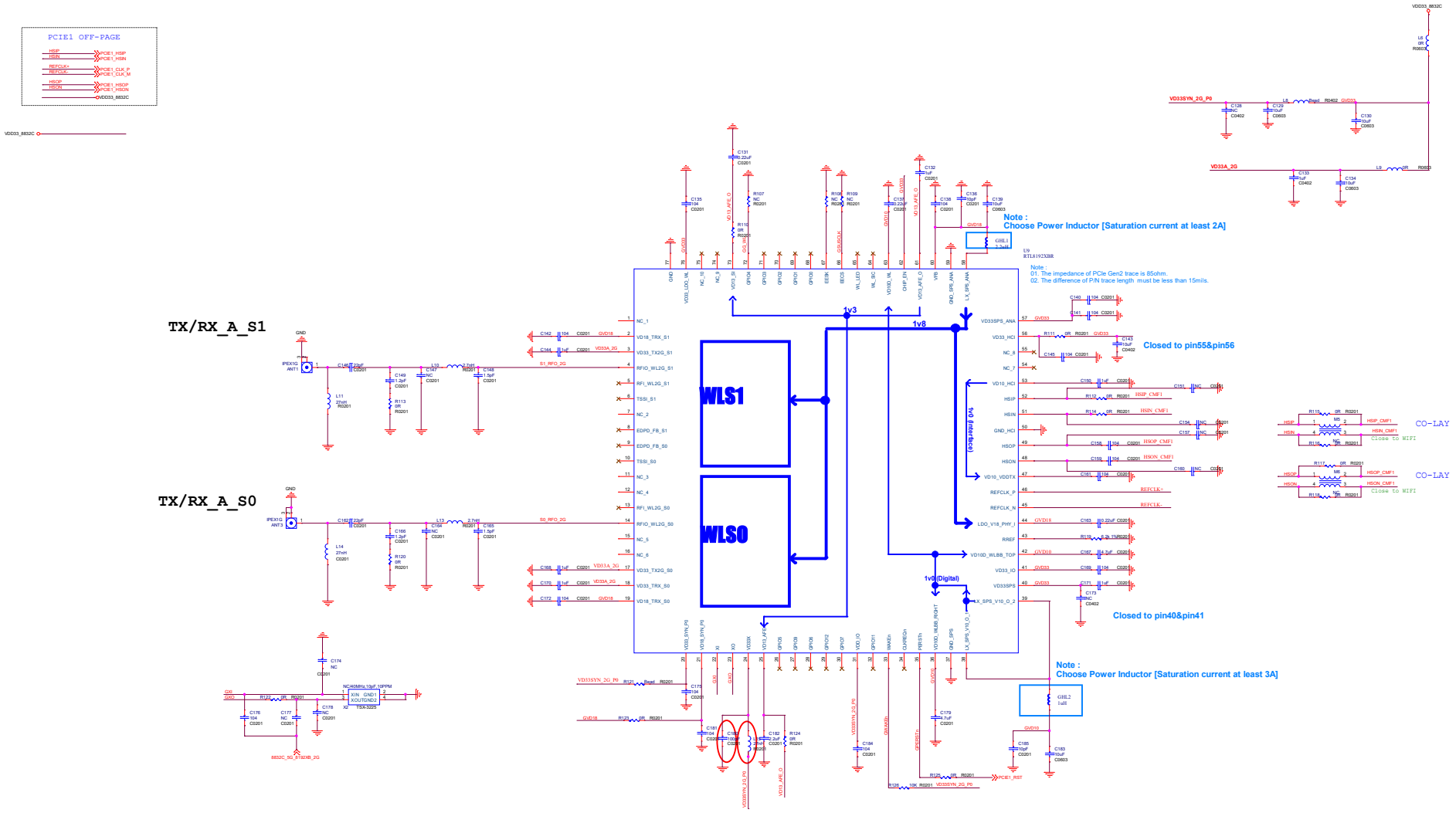

GUANGDONG BIPAI KEJI CPA.LTD		
Design Name: BPI-RT2-RTL8198D		
Size: A1	Page Name: P11_RFP01-RTL8192XBR	Rev: V10
http://www.bipai-pi.org	Date: Thursday, April 02, 2026	Sheet 11 of 12

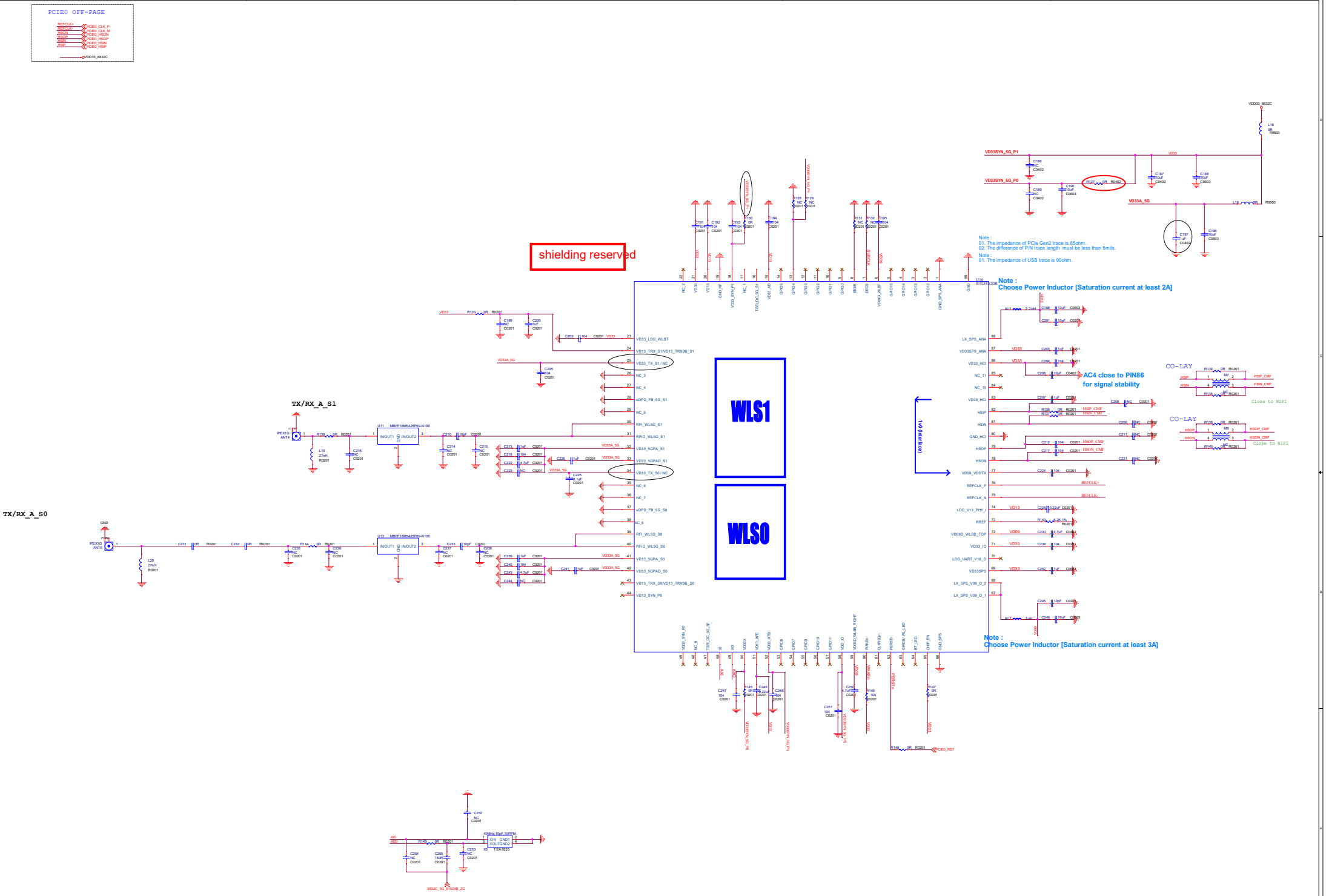

GUANGDONG BIPAI KEJI CPA.LTD		
Design Name	BPI-RT2-RTL8198D	
Size A1	Page Name P12_RFP02-RTL8832DR	Rev V10
http://www.bizness-pi.org		
Date: Thursday, April 02, 2026	Sheet 12 of 12	