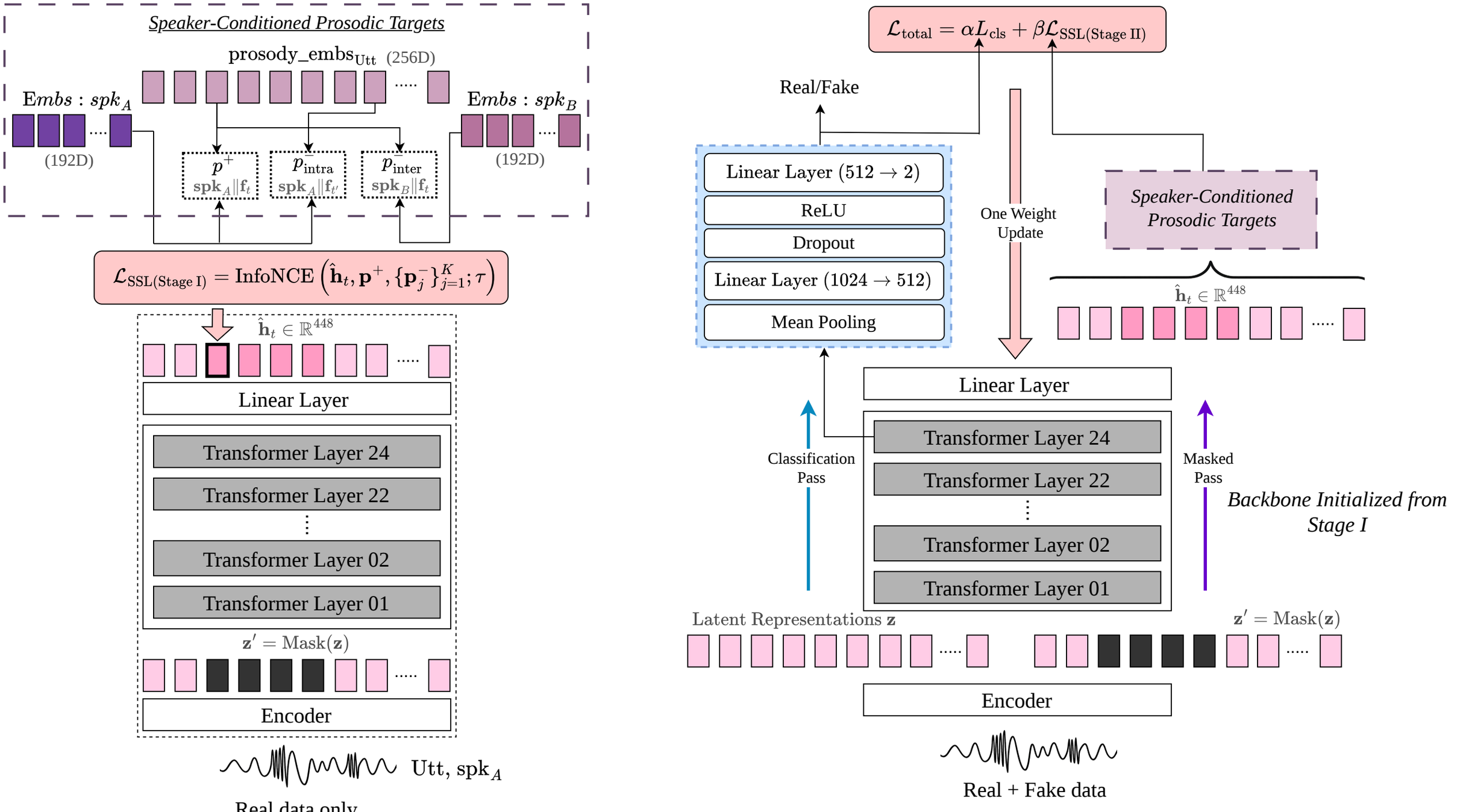
Speaker-Conditioned Prosodic Targets
prosody_embs$_{\text{Utt}}$ (256D)
Embs : spk_A
Embs : spk_B
(192D)
(192D)
p^+ $\mathbf{spk}_A \| \mathbf{f}_t$
p^-_{intra} $\mathbf{spk}_A \| \mathbf{f}_{t'}$
p^-_{inter} $\mathbf{spk}_B \| \mathbf{f}_t$
$\mathcal{L}_{\text{SSL(Stage I)}} = \text{InfoNCE}\left(\hat{\mathbf{h}}_t, \mathbf{p}^+, \{\mathbf{p}_j^-\}_{j=1}^K; \tau\right)$
$\hat{\mathbf{h}}_t \in \mathbb{R}^{448}$
Linear Layer
Transformer Layer 24
Transformer Layer 22
Transformer Layer 02
Transformer Layer 01
$\mathbf{z}' = \text{Mask}(\mathbf{z})$
Encoder
Utt, spk_A
Real data only
$\mathcal{L}_{\text{total}} = \alpha L_{\text{cls}} + \beta \mathcal{L}_{\text{SSL(Stage II)}}$
Real/Fake
Linear Layer (512 → 2)
ReLU
Dropout
Linear Layer (1024 → 512)
Mean Pooling
One Weight Update
Speaker-Conditioned Prosodic Targets
$\hat{\mathbf{h}}_t \in \mathbb{R}^{448}$
Linear Layer
Classification Pass
Transformer Layer 24
Transformer Layer 22
Transformer Layer 02
Transformer Layer 01
Masked Pass
Backbone Initialized from Stage I
Latent Representations $\mathbf{z}$
$\mathbf{z}' = \text{Mask}(\mathbf{z})$
Encoder
Real + Fake data