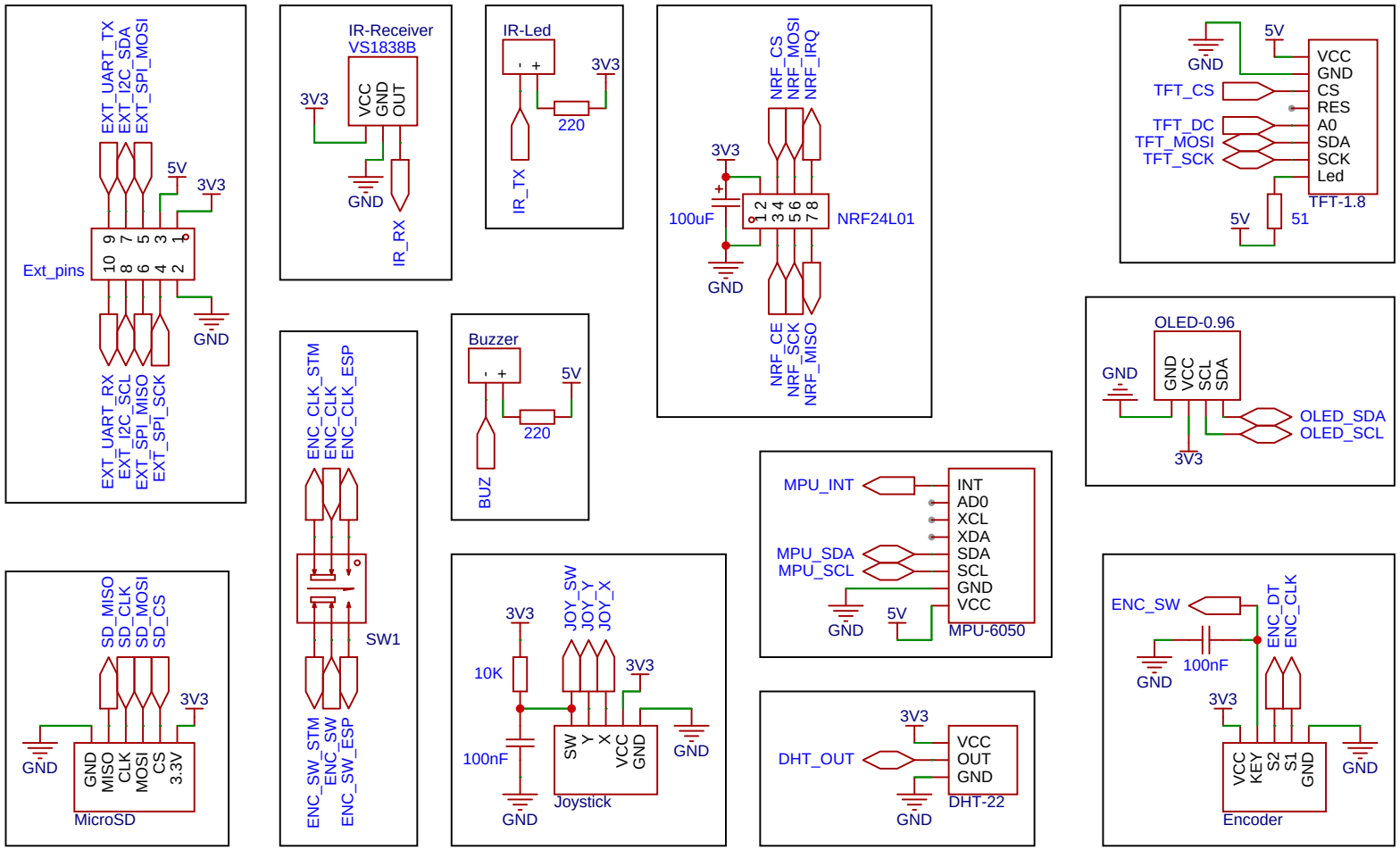

Schematic	Schematic1	Create at	2026-04-28
		Update at	2026-04-28
Board	Board1	Page	board
Drawn		Scheme	
Reviewed			
		Version	Size	Page 1 Total 3
EasyEDA		V1.0	A4	EasyEDA.com

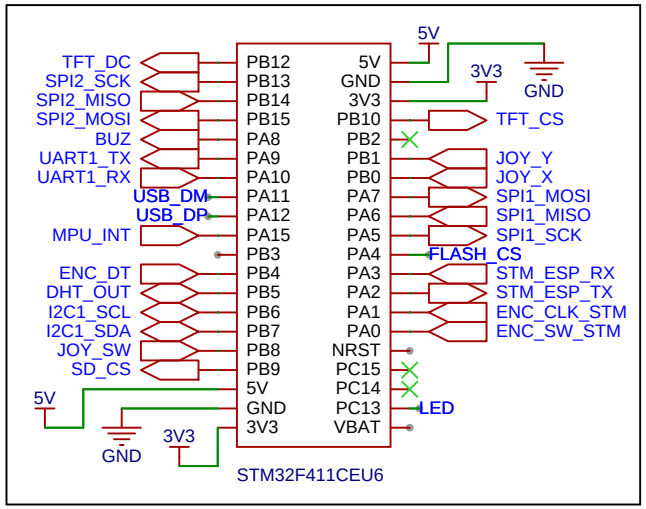

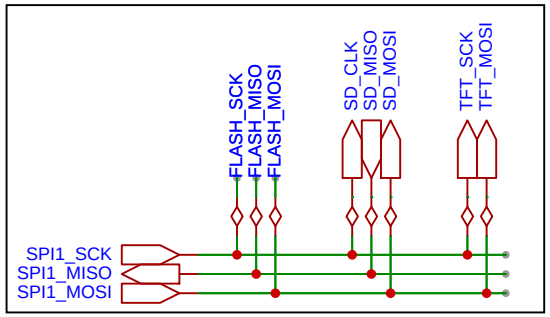

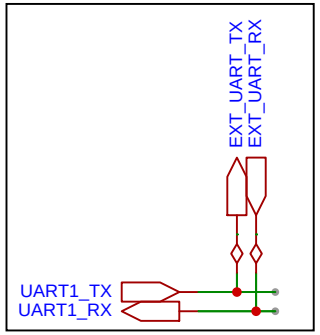

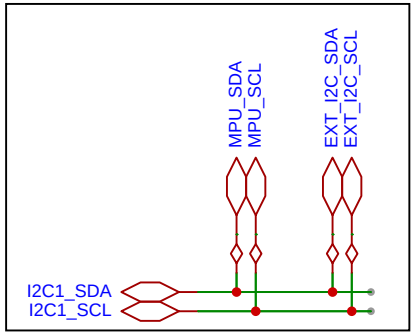

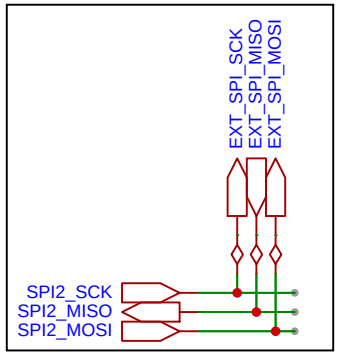

Schematic	Schematic1	Create at	2026-04-28
		Update at	2026-04-28
Board	Board1	Page	stm
Drawn		Scheme	
Reviewed			
		Version	Size	Page 2 Total 3
EasyEDA		V1.0	A4	EasyEDA.com

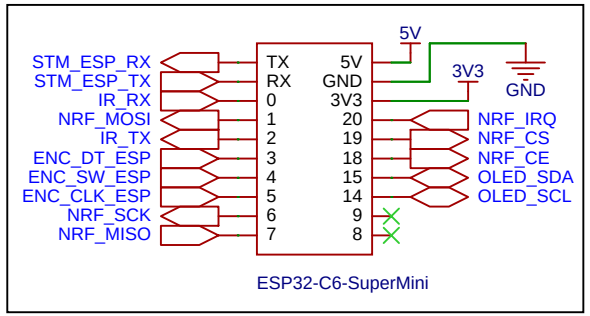

Schematic	Schematic1	Create at	2026-04-28
		Update at	2026-04-28
Board	Board1	Page	esp
Drawn		Scheme	
Reviewed			
		Version	Size	Page 3 Total 3
EasyEDA		V1.0	A4	EasyEDA.com