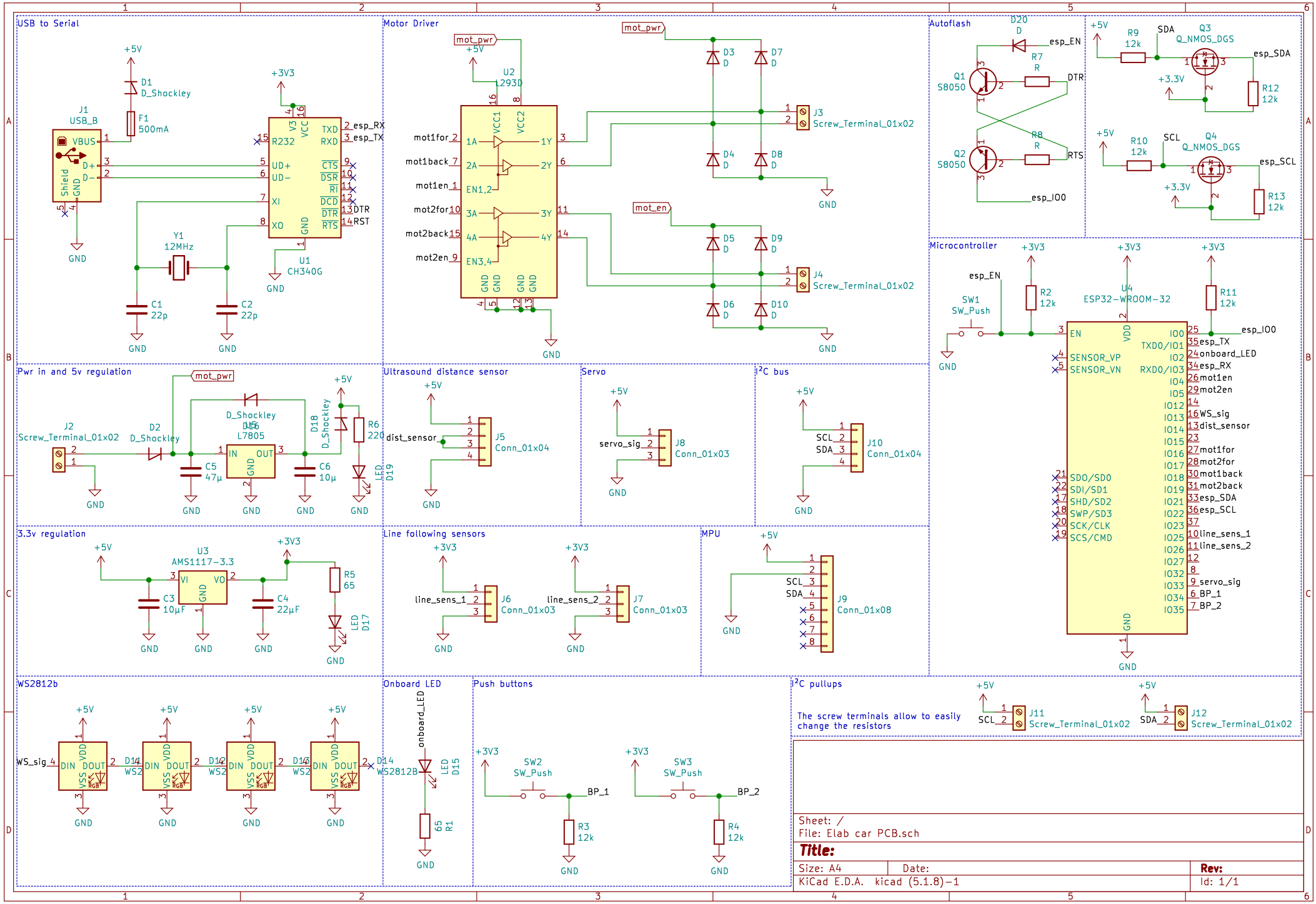
USB to Serial
J1 USB_B
D1 D_Shockley
F1 500mA
U1 CH340G
Y1 12MHz
C1 22p
C2 22p
Motor Driver
U2 L293D
mot_pwr
mot_en
mot1for
mot1back
mot1en
mot2for
mot2back
mot2en
J3 Screw_Terminal_01x02
J4 Screw_Terminal_01x02
Autoflash
Q1 S8050
Q2 S8050
Q3 Q_NMOS_DGS
Q4 Q_NMOS_DGS
esp_EN
esp_SDA
esp_SCL
esp_IO0
Microcontroller
U4 ESP32-WROOM-32
SW1 SW_Push
R2 12k
R11 12k
Pwr in and 5v regulation
J2 Screw_Terminal_01x02
D2 D_Shockley
U5 L7805
C5 47µ
C6 10µ
R6 220
Ultrasound distance sensor
J5 Conn_01x04
Servo
J8 Conn_01x03
I²C bus
J10 Conn_01x04
3.3v regulation
U3 AMS1117-3.3
C3 10µF
C4 22µF
R5 65
Line following sensors
J6 Conn_01x03
J7 Conn_01x03
MPU
J9 Conn_01x08
WS2812b
Onboard LED
Push buttons
SW2 SW_Push
SW3 SW_Push
BP_1
BP_2
I²C pullups
The screw terminals allow to easily change the resistors
J11 Screw_Terminal_01x02
J12 Screw_Terminal_01x02
Sheet: /
File: Elab car PCB.sch
Title:
Size: A4
Date:
Rev:
KiCad E.D.A. kicad (5.1.8)-1
Id: 1/1