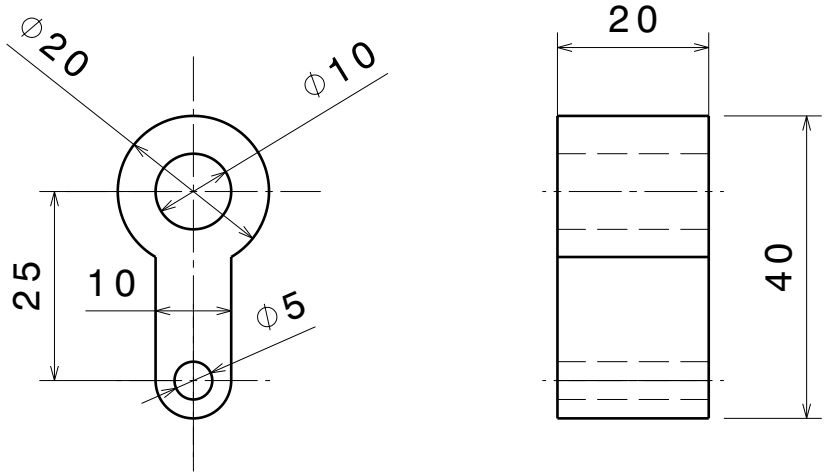

DESIGNED BY: Kaike Anjos DATE: 05/09/2024		Sketch_01		I _
CHECKED BY: XXX DATE: XXX				H _
				G _
				F _
SIZE A4		DASSAULT SYSTEMES		E _
				D _
SCALE 1:1	WEIGHT (kg) XXX	DRAWING NUMBER XXX	SHEET 1/1	C _
				B _
				A _

This drawing is our property; it can't be reproduced or communicated without our written agreement.