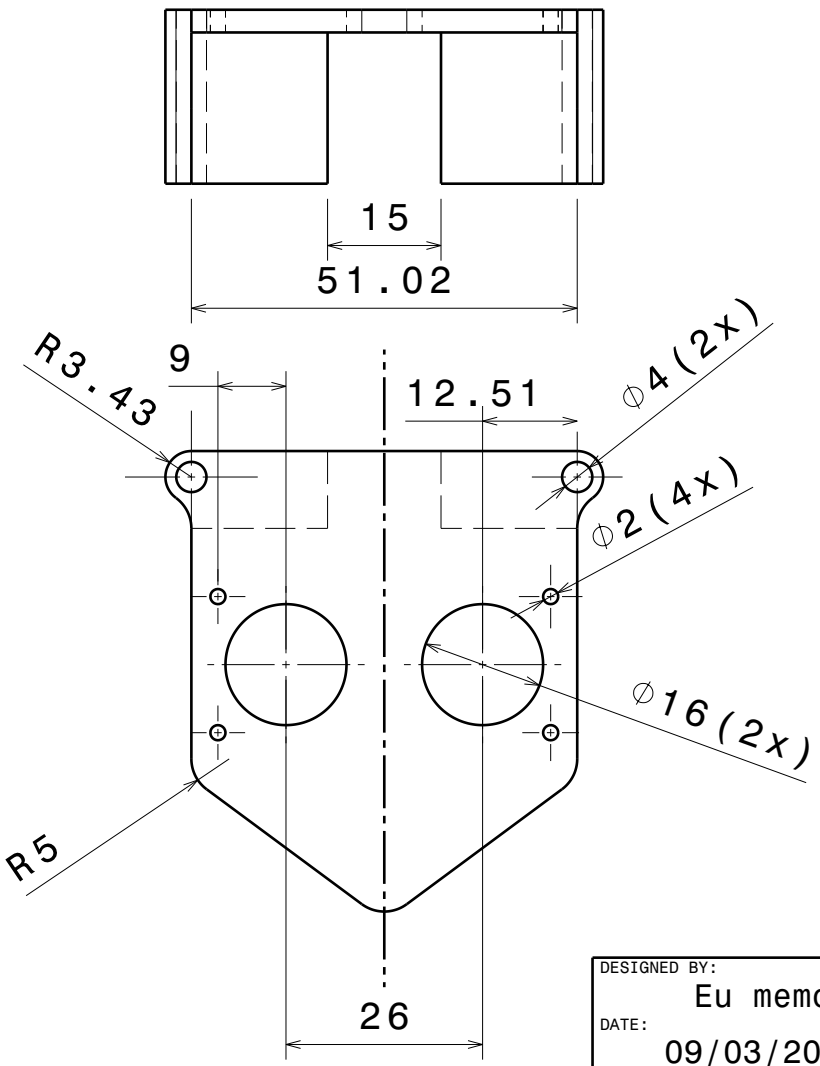

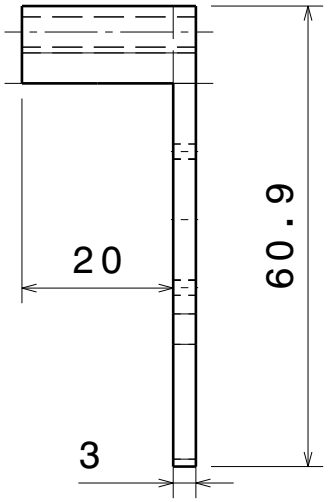

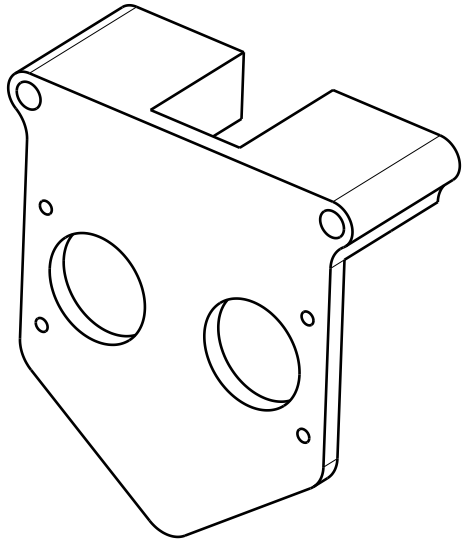

DESIGNED BY: Eu memo DATE: 09/03/2025			
CHECKED BY: XXX DATE: XXX			
SIZE A4		DASSAULT SYSTEMES	
SCALE 1:1	WEIGHT (kg) 0,01	DRAWING NUMBER Sensor	SHEET 1/1

This drawing is our property; it can't be reproduced or communicated without our written agreement.

I	_
H	_
G	_
F	_
E	_
D	_
C	_
B	_
A	_