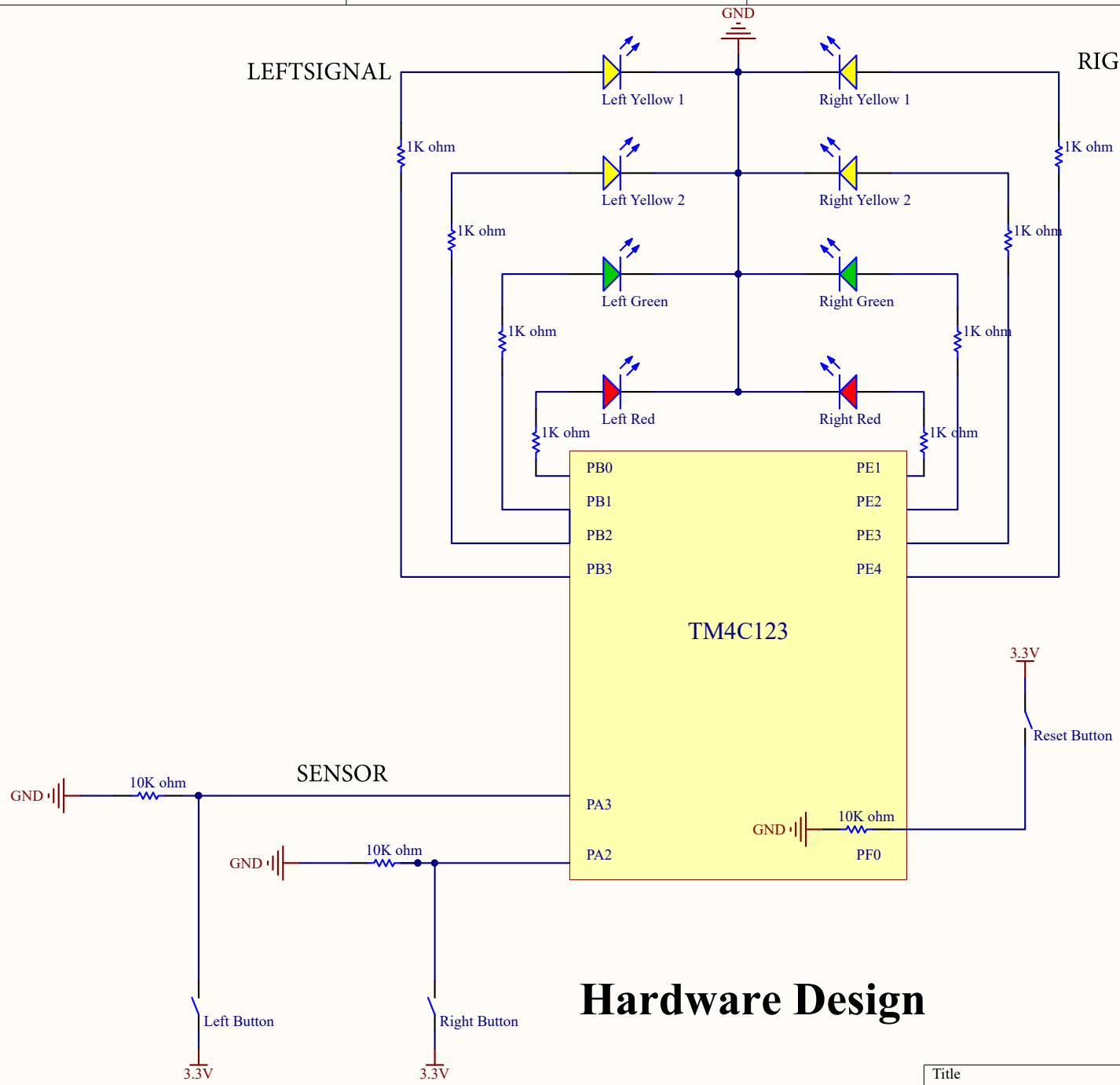

Hardware Design

Title		
Size A	Number	Revision
Date: 11/14/2019		Sheet of
File: Sheet2.SchDoc		Drawn By: