HAMi v2.7.0加速兼容国产算力

构建统一、高效的异构算力虚拟化平台

欧阳陆伟@研发工程师

北京睿思智联科技有限公司

Copyright © Rise Union All rights reserved

Rise Union

目录

01 「v2.7.0」国产芯片适配进展

02 XPU-P800 适配概要

03 HAMi-Scheduler 拓扑感知

04 DevicePlugin 如何实现动态切分

05 vXPU的注意事项

06 可视化的方式还原调度过程

「v2.7.0」国产芯片适配进展

昆仑芯 P800-OAM

XPU & vXPU

拓扑感知调度

@ouyangluwei13

燧原 GCU-S60

GCU & vGCU

拓扑感知调度

@zhaikangqi331

沐曦 MetaX-C500

GCU & vGCU

拓扑感知调度

@Kyrie336

昆仑芯P800适配概要

深度融合原厂能力，并增强调度能力和扩展虚拟化

●XPU&vXPU

- 适配XPU：支持指定卡调度；
- 适配vXPU：支持(1/2卡和1/4卡)；

```
+-----------------------------+----------------------+----------------------+
|   5  P800 OAM           N/A | 00000000:1D:00.0 N/A |                    0 |
| N/A   32C  N/A     83W / 400W |      0MiB / 98304MiB |      0%      Default |
|                               |      0MiB /    96MiB |              Enabled |
+-----------------------------+----------------------+----------------------+
|   6  P800 VF            N/A | 00000000:1D:00.1 N/A |                  N/A |
| N/A   32C  N/A     83W / 400W |      0MiB / 49152MiB |      0%      Default |
|                               |      0MiB /    48MiB |                  N/A |
+-----------------------------+----------------------+----------------------+
|   7  P800 VF            N/A | 00000000:1D:00.2 N/A |                  N/A |
| N/A   32C  N/A     83W / 400W |      0MiB / 49152MiB |      0%      Default |
|                               |      0MiB /    48MiB |                  N/A |
+-----------------------------+----------------------+----------------------+
```

●动态切分和显存对齐

- 每个设备按需切分&合并；
- 过程平滑，无需重启DP；

```
+-----------------------------+----------------------+----------------------+
|   0  P800 OAM           N/A | 00000000:18:00.0 N/A |                    0 |
| N/A   37C  N/A     83W / 400W |      0MiB / 98304MiB |      0%      Default |
|                               |      0MiB /    96MiB |              Enabled |
+-----------------------------+----------------------+----------------------+
|   1  P800 VF            N/A | 00000000:18:00.1 N/A |                  N/A |
| N/A   37C  N/A     83W / 400W |      0MiB / 24576MiB |      0%      Default |
|                               |      0MiB /    24MiB |                  N/A |
+-----------------------------+----------------------+----------------------+
|   2  P800 VF            N/A | 00000000:18:00.2 N/A |                  N/A |
| N/A   37C  N/A     83W / 400W |      0MiB / 24576MiB |      0%      Default |
|                               |      0MiB /    24MiB |                  N/A |
+-----------------------------+----------------------+----------------------+
|   3  P800 VF            N/A | 00000000:18:00.3 N/A |                  N/A |
| N/A   37C  N/A     83W / 400W |      0MiB / 24576MiB |      0%      Default |
|                               |      0MiB /    24MiB |                  N/A |
+-----------------------------+----------------------+----------------------+
|   4  P800 VF            N/A | 00000000:18:00.4 N/A |                  N/A |
| N/A   37C  N/A     83W / 400W |      0MiB / 24576MiB |      0%      Default |
|                               |      0MiB /    24MiB |                  N/A |
+-----------------------------+----------------------+----------------------+
```

●支持拓扑感知调度

- 贪心算法：单Node选择最优链路；
- 全局比较：多Node比较

拓扑感知调度

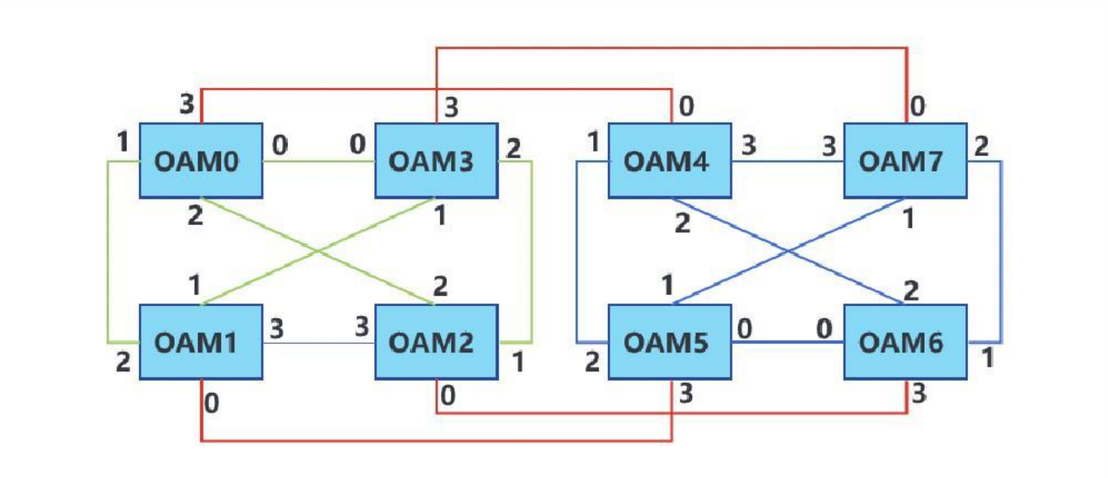


```
        XPU0    XPU1    XPU2    XPU3    XPU4    XPU5    XPU6    XPU7    NIC0    NIC1    CPU Affinity    NUMA Affinity
XPU0     X      XL      XL      XL      SYS     SYS     XL      SYS     NODE    NODE    0-23,96-119     0
XPU1    XL       X      XL      XL      SYS     SYS     SYS     XL      NODE    NODE    0-23,96-119     0
XPU2    XL      XL       X      XL      XL      SYS     SYS     SYS     SYS     SYS     24-47,120-143   1
XPU3    XL      XL      XL       X      SYS     XL      SYS     SYS     SYS     SYS     24-47,120-143   1
XPU4    SYS     SYS     XL      SYS      X      XL      XL      XL      SYS     SYS     48-71,144-167   2
XPU5    SYS     SYS     SYS     XL      XL       X      XL      XL      SYS     SYS     48-71,144-167   2
XPU6    XL      SYS     SYS     SYS     XL      XL       X      XL      SYS     SYS     72-95,168-191   3
XPU7    SYS     XL      SYS     SYS     XL      XL      XL       X      SYS     SYS     72-95,168-191   3
NIC0    NODE    NODE    SYS     SYS     SYS     SYS     SYS     SYS      X      PIX
NIC1    NODE    NODE    SYS     SYS     SYS     SYS     SYS     SYS     PIX      X

Legend:

  X    = Self
  SYS  = Connection traversing PCIe as well as the SMP interconnect between NUMA nodes (e.g., QPI/UPI)
  NODE = Connection traversing PCIe as well as the interconnect between PCIe Host Bridges within a NUMA node
  PHB  = Connection traversing PCIe as well as a PCIe Host Bridge (typically the CPU)
  PXB  = Connection traversing multiple PCIe bridges (without traversing the PCIe Host Bridge)
  PIX  = Connection traversing at most a single PCIe bridge
  XL   = Connection traversing XPULink

NIC Legend:

  NIC0: mlx5_0
  NIC1: mlx5_1
```

多个任务共享同一块物理 GPU 卡

- 过滤满足资源的显卡
- 单wing优先：leftwing&rightwing2个wing任意满足
- 跨wing补救：尽量选择有链路的
- 多节点最优分，取最优

vXPU如何实现动态切分

全面适配HAMi，并增强虚拟化能力

●适配HAMi核心特性

- 指定显卡调度；
- 节点锁机制；
- 维护Pod的Annotation；

```yaml
apiVersion: v1
kind: Pod
metadata:
  annotations:
    BAIDU_COM_DEVICE_IDX: "14"
    hami.io/bind-phase: allocating
    hami.io/bind-time: "1766659357"
    hami.io/resource-pool: ai-for-deployer-default
    hami.io/vgpu-node: node201-xpu
    hami.io/vgpu-time: "1766659357"
    hami.io/xpu-devices-allocated: 00000000-CE-00.0,XPU,49152,50:;
    hami.io/xpu-devices-to-allocate: 00000000-CE-00.0,XPU,49152,50:;
    hami.io/xvpu-devices-allocated: 00000000:CE:00.1
```

●设备动态切分

- 维护BusID&ID映射；
- 根据用户请求实时切割&合并；
- 获取最新Id&刷新内存&分配卡

```yaml
apiVersion: v1
kind: Node
metadata:
  annotations:
    hami.io/node-handshake-xpu: Requesting_2025-12-25 10:52:35
    hami.io/node-register-vxpu: 00000000:18:00.0-0,00000000:18:00.1-1,00000000:18:00.2-2,00000000:18:00.3-3,00000000
0000000:1D:00.2-7,00000000:4B:00.0-8,00000000:50:00.0-9,00000000:9A:00.0-10,00000000:9E:00.0-11,00000000:CA:00.0-12,
E:00.2-15
    hami.io/node-register-xpu: '[{"id":"00000000-18-00.0","count":4,"devmem":98304,"devcore":100,"type":"XPU-P800
      OAM","health":true},{"index":1,"id":"00000000-1D-00.0","count":4,"devmem":98304,"devcore":100,"type":"XPU-P800
      OAM","health":true},{"index":2,"id":"00000000-4B-00.0","count":4,"devmem":98304,"devcore":100,"type":"XPU-P800
      OAM","health":true},{"index":3,"id":"00000000-50-00.0","count":4,"devmem":98304,"devcore":100,"type":"XPU-P800
      OAM","health":true},{"index":4,"id":"00000000-9A-00.0","count":4,"devmem":98304,"devcore":100,"type":"XPU-P800
      OAM","health":true},{"index":5,"id":"00000000-9E-00.0","count":4,"devmem":98304,"devcore":100,"type":"XPU-P800
      OAM","health":true},{"index":6,"id":"00000000-CA-00.0","count":4,"devmem":98304,"devcore":100,"type":"XPU-P800
      OAM","health":true},{"index":7,"id":"00000000-CE-00.0","count":4,"devmem":98304,"devcore":100,"type":"XPU-P800
      OAM","health":true}]'
    kubeadm.alpha.kubernetes.io/cri-socket: unix:///run/containerd/containerd.sock
    node.alpha.kubernetes.io/ttl: "0"
```

vXPU的注意事项

kunlunxin.com/vxpu: 6
kunlunxin.com/vxpu-memory: 24576

kunlunxin.com/vxpu: 8
kunlunxin.com/vxpu-memory: 49152

kunlunxin.com/vxpu: 8
kunlunxin.com/vxpu-memory: 24576

当前昆仑芯驱动最多支持32个句柄，8张XPU设备占8个句柄，无法支持8个设备都切成4个。

调度可观测性现状

卡粒度&异构场景带来的调度失败排查难

卡粒度&调度特性，
叠加导致大量日志

日志缺乏Pod/Node
的上下文，无法定位具体

卡节点的并发加剧
日志混乱情况

调度可观测性改进

丰富Event&规范Log，降低排查成本

●Event事件

- 按调度条件汇总整理；
- 调度成功输出各节点得分；

```
Events:
  Type    Reason            Age    From            Message
  ----    ------            ----   ----            -------
  Normal  Scheduled         2m9s   hami-scheduler  Successfully assigned rise-vast-system/alexnet-tf-gpu-pod-mem-entire to vm-node
244-dcu
  Normal  FilteringSucceed  2m10s  hami-scheduler  find fit node(vm-node244-dcu), 2 nodes not fit, 1 nodes fit(vm-node244-dcu:0.00
)
  Normal  BindingSucceed    2m9s   hami-scheduler  Successfully binding node [vm-node244-dcu] to rise-vast-system/alexnet-tf-gpu-p
od-mem-entire
  Normal  Pulled            2m8s   kubelet         Container image "image.sourcefind.cn:5000/dcu/admin/base/tensorflow:2.13.1-ubun
tu22.04-dtk25.04-py3.10-fixpy" already present on machine
  Normal  Created           2m8s   kubelet         Created container alexnet-tf-gpu-container
  Normal  Started           2m8s   kubelet         Started container alexnet-tf-gpu-container
```

●调度日志

- v4–level: 每个设备按需切分&合并；
- v5–level: 每台设备的故障原因及标准化错误代码；
- <ErrorReason> <Namespace/PodName> <NodeName> <DeviceUUID>

```
e, 2 nodes do not meet"
I0425 07:23:15.171626       1 scheduler.go:444] "Starting schedule filter process" pod="gpu-pod-wangmin" uuid="43349381-d3e3-40b9-a009-410908d9e3a1" namespace="rise-vast-system"
I0425 07:23:15.171675       1 pod.go:29] "Processing resource requirements" pod="rise-vast-system/gpu-pod-wangmin" containerCount=1
I0425 07:23:15.171697       1 pod.go:36] "Processing container resources" pod="rise-vast-system/gpu-pod-wangmin" containerIndex=0 containerName="ubuntu-container"
I0425 07:23:15.171916       1 pod.go:51] "Resource requirements collected" pod="rise-vast-system/gpu-pod-wangmin" requests=[{"NVIDIA":{"Nums":1,"Type":"NVIDIA","Memreq":3000,"MemPercentagereq":101,"Coresreq":
30}}]
I0425 07:23:15.171942       1 pods.go:98] "Pod not found for deletion" pod="rise-vast-system/gpu-pod-wangmin"
I0425 07:23:15.172537       1 score.go:285] "fitInDevices" pod="rise-vast-system/gpu-pod-wangmin" node="aio-node67"
I0425 07:23:15.172777       1 score.go:89] "Allocating device for container request" pod="rise-vast-system/gpu-pod-wangmin" card request={"Nums":1,"Type":"NVIDIA","Memreq":3000,"MemPercentagereq":101,"Coresre
q":30}
I0425 07:23:15.172805       1 score.go:95] "scoring pod" pod="rise-vast-system/gpu-pod-wangmin" node="aio-node67" device="aio-node67-iluvatar-1" Memreq=3000 MemPercentagereq=101 Coresreq=30 Nums=1 device inde
x=5
I0425 07:23:15.172860       1 score.go:99] "CardTypeMismatch" pod="rise-vast-system/gpu-pod-wangmin" node="aio-node67" device="aio-node67-iluvatar-1" Iluvatar="NVIDIA"
I0425 07:23:15.172885       1 score.go:95] "scoring pod" pod="rise-vast-system/gpu-pod-wangmin" node="aio-node67" device="aio-node67-iluvatar-0" Memreq=3000 MemPercentagereq=101 Coresreq=30 Nums=1 device inde
x=4
I0425 07:23:15.172931       1 score.go:99] "CardTypeMismatch" pod="rise-vast-system/gpu-pod-wangmin" node="aio-node67" device="aio-node67-iluvatar-0" Iluvatar="NVIDIA"
I0425 07:23:15.172955       1 score.go:95] "scoring pod" pod="rise-vast-system/gpu-pod-wangmin" node="aio-node67" device="aio-node67-cambricon-mlu-1" Memreq=3000 MemPercentagereq=101 Coresreq=30 Nums=1 device
 index=3
I0425 07:23:15.173000       1 score.go:99] "CardTypeMismatch" pod="rise-vast-system/gpu-pod-wangmin" node="aio-node67" device="aio-node67-cambricon-mlu-1" MLU="NVIDIA"
I0425 07:23:15.173020       1 score.go:95] "scoring pod" pod="rise-vast-system/gpu-pod-wangmin" node="aio-node67" device="aio-node67-cambricon-mlu-0" Memreq=3000 MemPercentagereq=101 Coresreq=30 Nums=1 device
 index=2
I0425 07:23:15.173086       1 score.go:99] "CardTypeMismatch" pod="rise-vast-system/gpu-pod-wangmin" node="aio-node67" device="aio-node67-cambricon-mlu-0" MLU="NVIDIA"
I0425 07:23:15.173115       1 score.go:95] "scoring pod" pod="rise-vast-system/gpu-pod-wangmin" node="aio-node67" device="GPU-0fc3eda5-e98b-a25b-5b0d-cf5c855d1448" Memreq=3000 MemPercentagereq=101 Coresreq=30
 Nums=1 device index=1
I0425 07:23:15.173189       1 score.go:137] "CardInsufficientMemory" pod="rise-vast-system/gpu-pod-wangmin" node="aio-node67" device="GPU-0fc3eda5-e98b-a25b-5b0d-cf5c855d1448" device index=1 device total memo
ry=32768 device used memory=32768 request memory=3000
I0425 07:23:15.173220       1 score.go:95] "scoring pod" pod="rise-vast-system/gpu-pod-wangmin" node="aio-node67" device="GPU-00552014-5c87-89ac-b1a6-7b53aa24b0ec" Memreq=3000 MemPercentagereq=101 Coresreq=30
 Nums=1 device index=0
I0425 07:23:15.173290       1 score.go:137] "CardInsufficientMemory" pod="rise-vast-system/gpu-pod-wangmin" node="aio-node67" device="GPU-00552014-5c87-89ac-b1a6-7b53aa24b0ec" device index=0 device total memo
ry=32768 device used memory=32768 request memory=3000
I0425 07:23:15.173325       1 score.go:289] "NodeUnfitPod" pod="rise-vast-system/gpu-pod-wangmin" node="aio-node67" reason="4/6 CardTypeMismatch, 2/6 CardInsufficientMemory"
I0425 07:23:15.173371       1 scheduler.go:480] "No available nodes meet the required scores" pod="gpu-pod-wangmin"
I0425 07:23:15.173597       1 event.go:307] "Event occurred" object="rise-vast-system/gpu-pod-wangmin" fieldPath="" kind="Pod" apiVersion="v1" type="Warning" reason="FilteringFailed" message="no available nod
e, 2 nodes do not meet"
```

●调度可视化

- 提供Http接口：结构化输出整个调度过程；

调度过程–过滤器阶段

高级

节点名称	节点状态	节点分数	容器名称	容器状态	失败原因
aio-node67	passed	1.15625	tk-0-715bc19b-1a33-4c40-b95d-3607393c6704	passed	
ucloud-wlcb-gpu-030	failed	0	tk-0-715bc19b-1a33-4c40-b95d-3607393c6704	failed	7/8 ResourcePoolDisallow, 1/8 CardTypeMismatch

调度过程–绑定阶段

状态	摘要
passed	bind success

感 谢 观 看

THANKS FOR WATCHING

欢迎访问官网：riseunion.ai 或联系我们：400-605-2336

北京睿思智联科技有限公司

Copyright © Rise Union All rights reserved

Rise Union