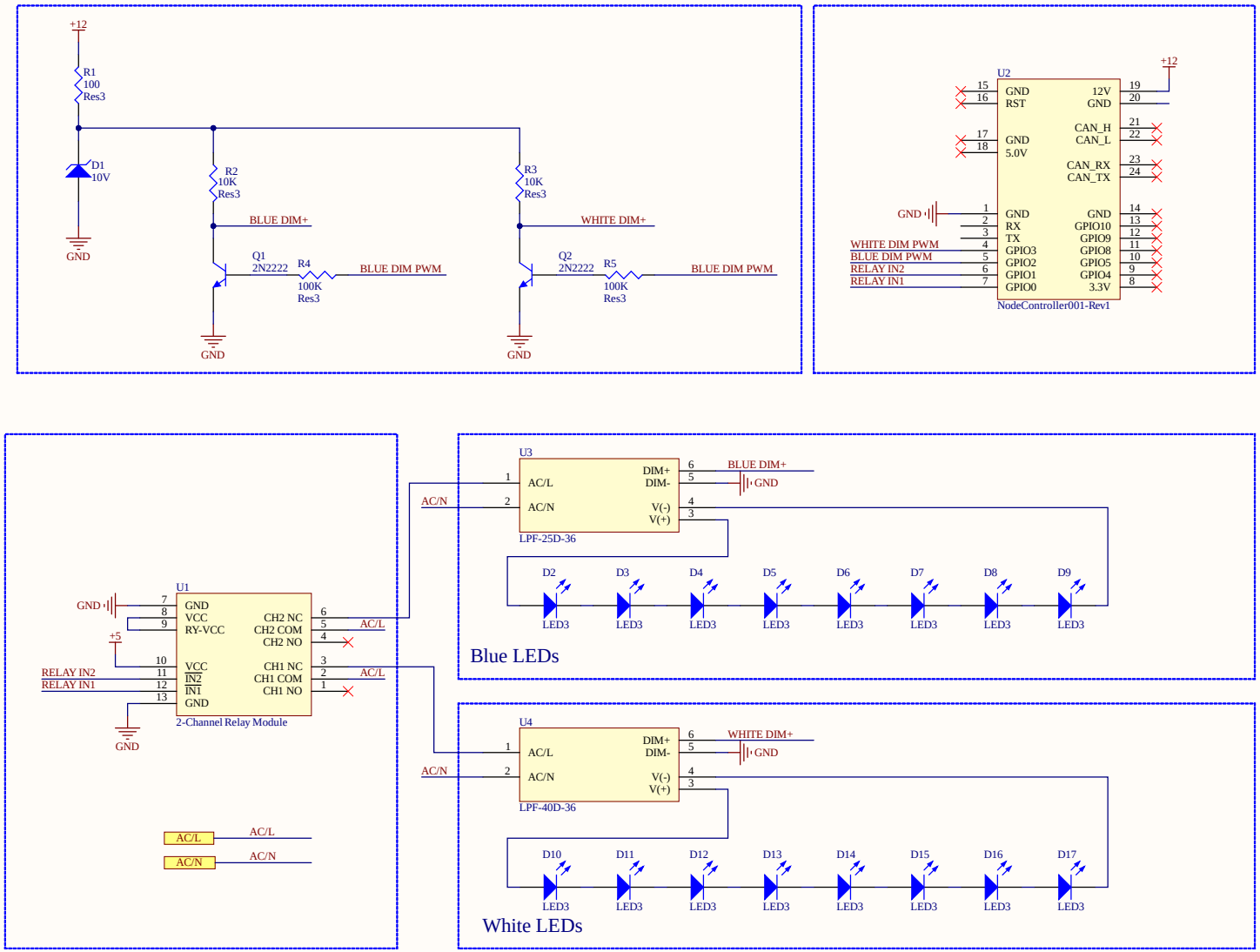

Title		
Size A3	Number	Revision
Date: 8-23-2024	Sheet of	
File: C:\Users\..\DualColorLEDLighting-PCB.SchDoc	Drawn By:	