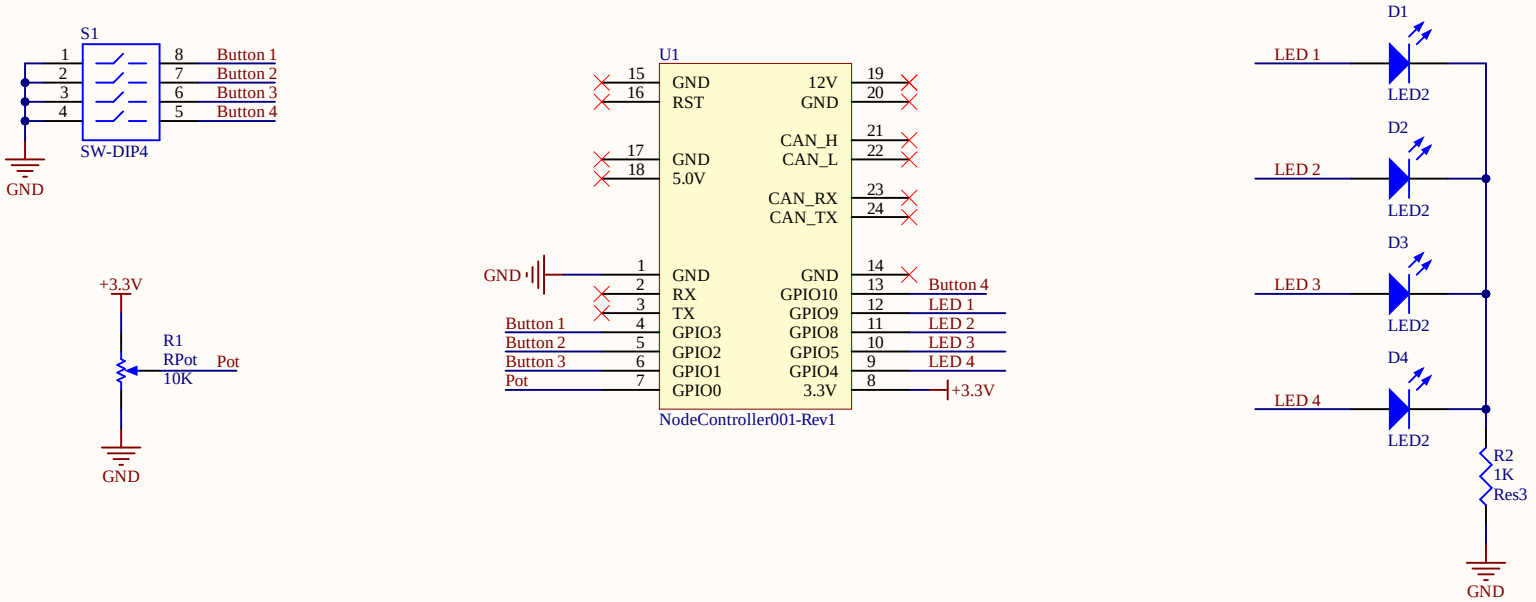

Title		
Size A4	Number	Revision
Date: 8-27-2024		Sheet of
File: C:\Users\..\Device-TesterHat.SchDoc		Drawn By: