In order to enter download/flash mode hold the push button X1 pressed when connecting the eStick to the USB interface on your PC/notebook.

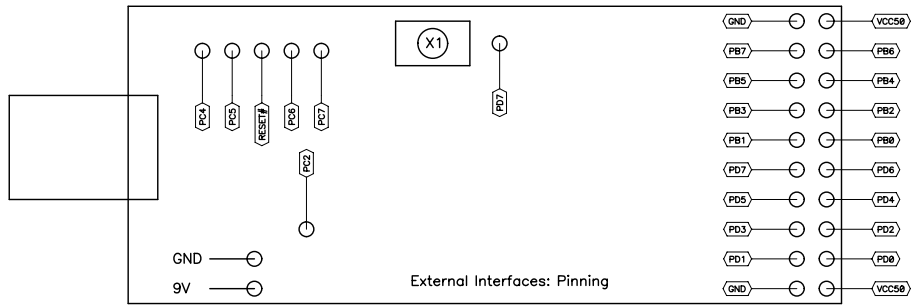

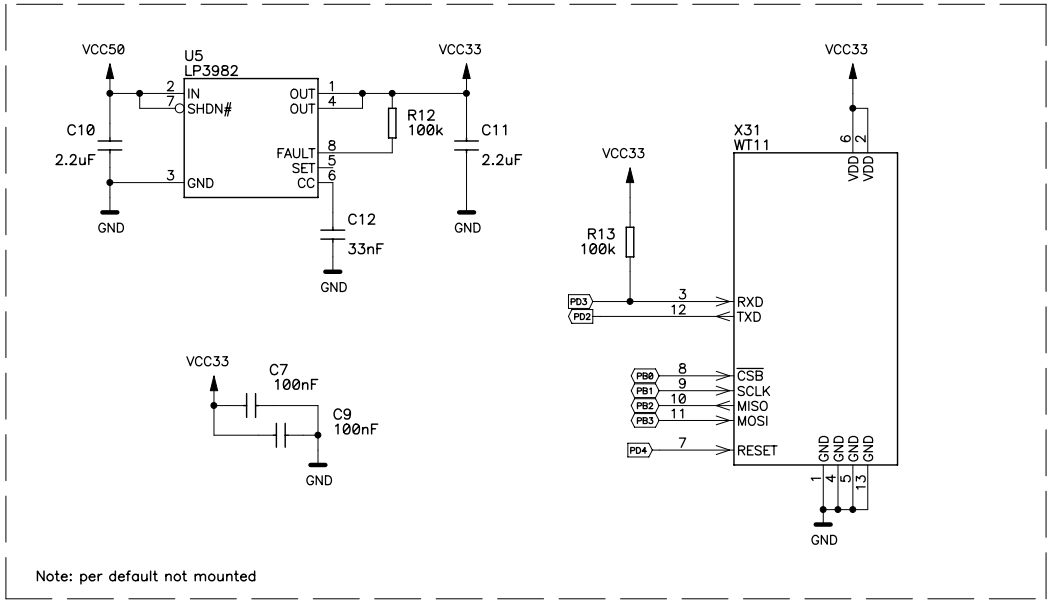

X1: Solder pads for a 9V Battery with straps

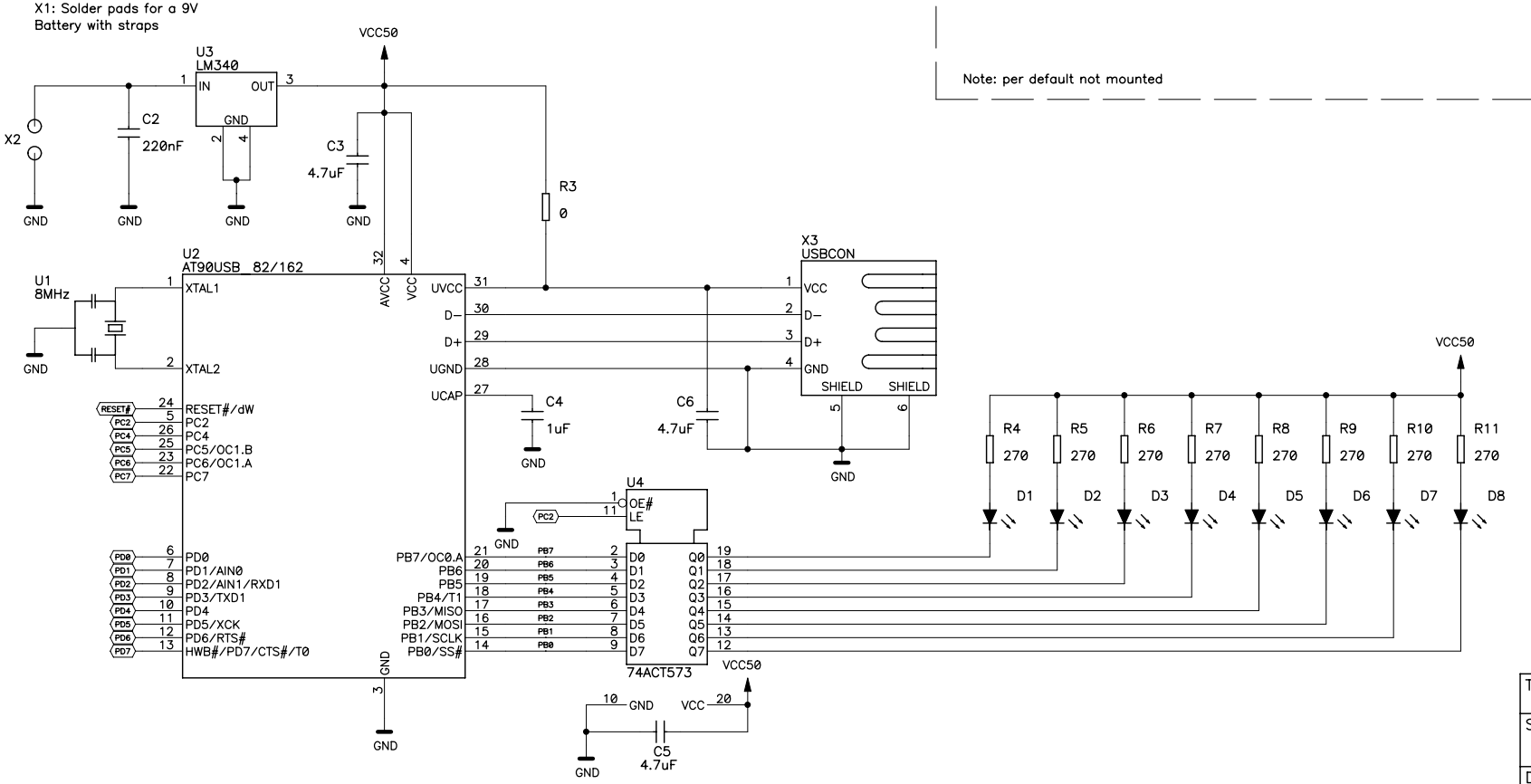

Programming Mode: hold X5 down during power–up
Normal Mode: otherwise

Note: All resistor and capacitors are of type 0805.

Title eSTICK		
Size A3	Number Elektronik Univ. of App. Sciences Technikum Wien	Rev 2.0
Date 01/2008	Drawn by	
Filename	Sheet 1 of 1	

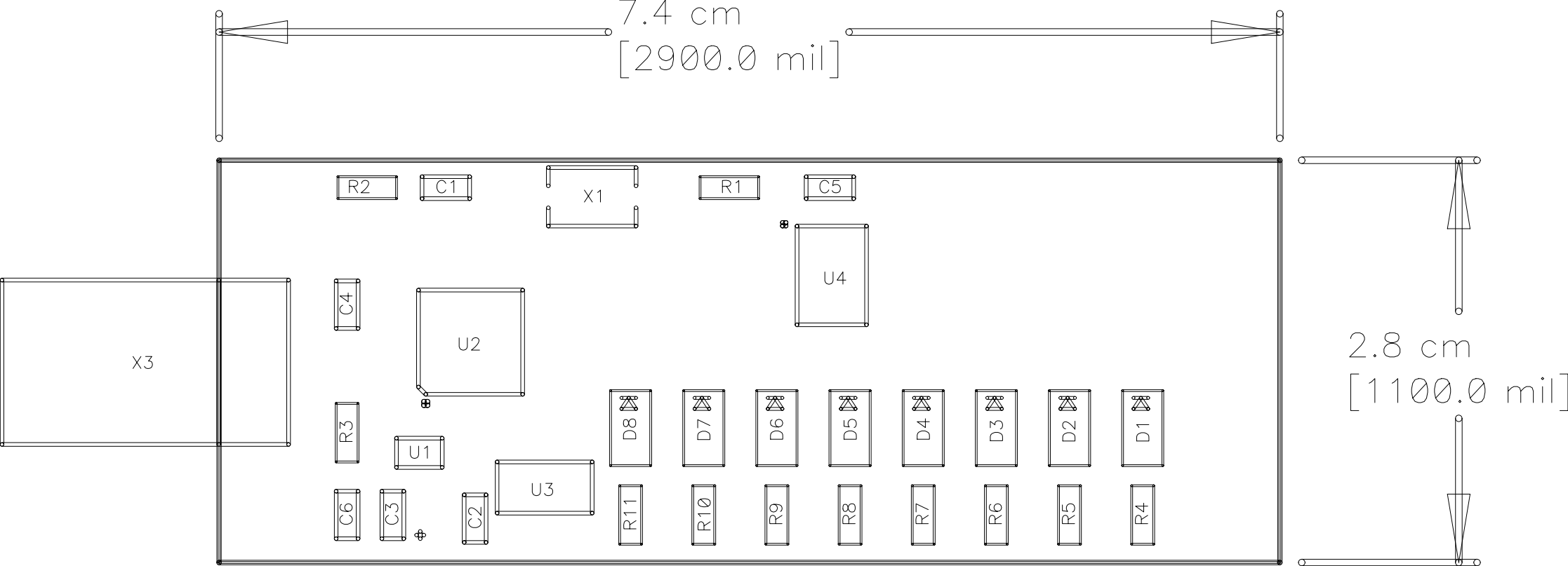
7.4 cm
[2900.0 mil]
2.8 cm
[1100.0 mil]
R2
C1
X1
R1
C5
U4
C4
U2
X3
R3
U1
U3
C6
C3
C2
D8
D7
D6
D5
D4
D3
D2
D1
R11
R10
R9
R8
R7
R6
R5
R4

X31

C7

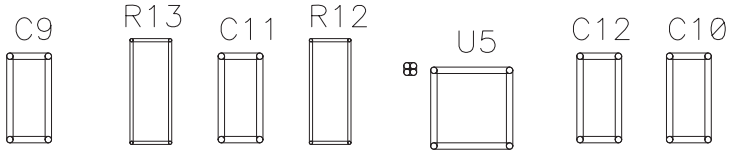
C9
R13
C11
R12
U5
C12
C10