Moab
Troubleshooting Manual

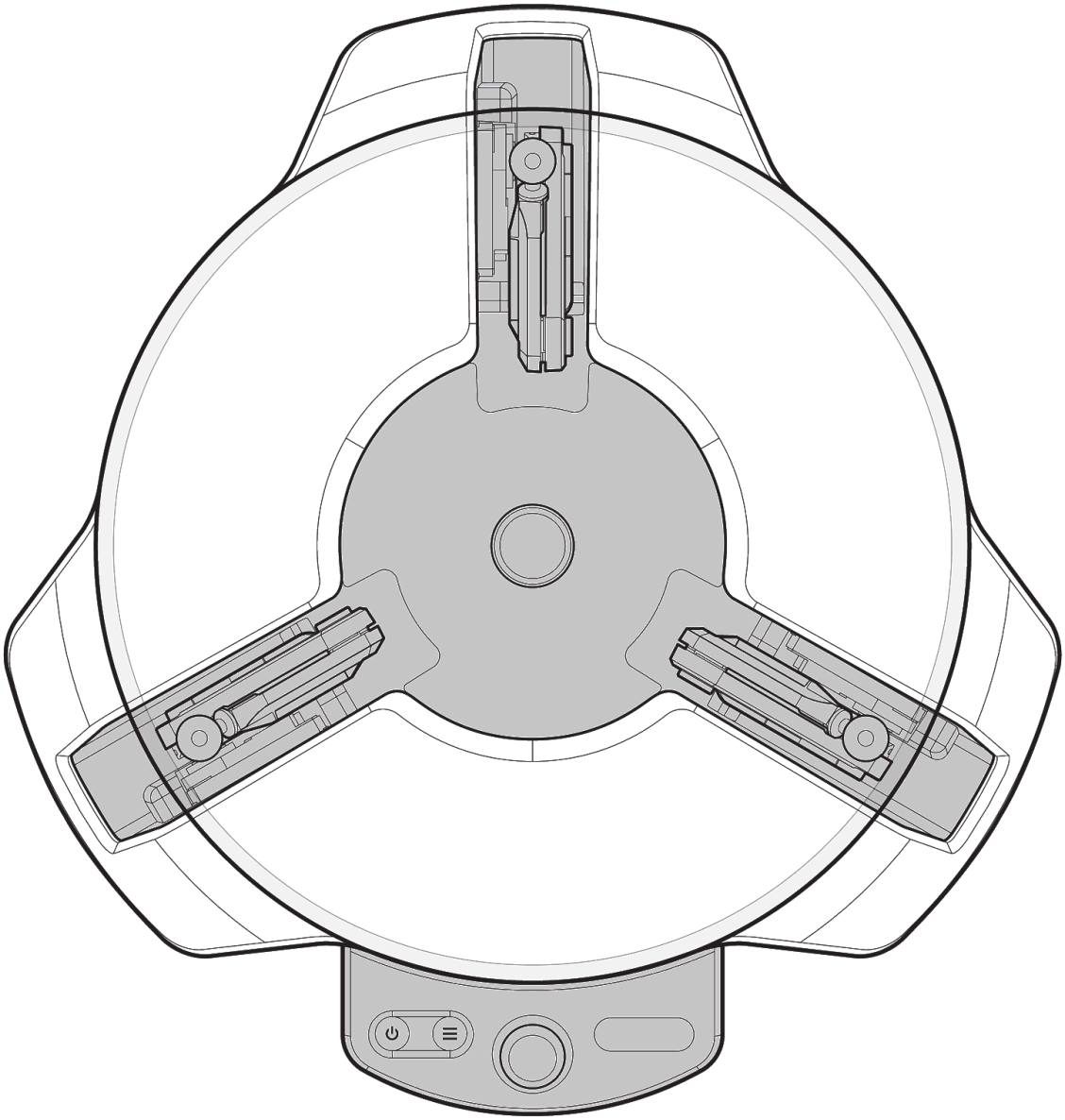

CONTENTS

PROCEDURE

Removing the cover **2**

TROUBLESHOOTING

The bot is not turning on **3-4**

UI screen stuck on “Project Moab” for more than 3 minutes **5**

Ball unable to balance in CLASSIC or BRAIN mode **6**

Bot turns off mid operation **7**

The plate came off of the arms **8**

Plate detaches during movement operation **9**

No video stream from HDMI when connected **10**

Servos actuate in disjointed fashion **10**

Camera lens loose or unfocused **11**

Camera is disconnected from the enclosure **12-13**

Something has broken. Ex. arms, white cover, or balance plate **13**

Buttons or thumbstick not working properly **13**

One of the rubber bumpers came off the Moab bot **14**

One of the magnets came off of the plate **14**

Arm joints are too tight or too loose **15**

Arm has become disconnected from the servo motor **16**

PROCEDURE

Removing the cover

For many troubleshooting solutions, removing the white top cover may be necessary. To remove this covering, use a T10 screwdriver with a shank longer than .157” (40mm) to undo the three T10 screws located on the underside of the bot. When operating on internal components of the board, make sure that it is fully disconnected from the power supply and you are properly grounded before touching anything! Not doing so can be damaging to the product or result in bodily harm.

Remove the top cover by unscrewing the T10 screws indicated above.

TROUBLESHOOTING

The bot is not turning on	
Possible Cause	**Solution**
Not plugged in	Using the provided power supply, connect the barrel jack connector to the rear of the bot. Attach the other end to a standard 120v or 240v wall outlet. Check for the blue light on the power supply, if there is no blue light check the power outlet.
Faulty hardware	If after plugging in the bot to power, and the top cover is removed, no white LEDs are illuminated, contact support at moab@microsoft.com
UI board ribbon cable disconnected or seated improperly	**Ensure the bot is unplugged from a power source and you are properly grounded.** After removing the top cover (see "removing the top cover), inspect the UI ribbon cable and its connection points on either end. The contacts should be barely visible and all level to ensure a solid connection with all corresponding pins. Pull the black tabs from the connecting points on both sides of the ribbon cable connector. This will release the cable and allow for readjustment. Feed the cable back into the slot and press the black tab back into place.
40-pin ribbon cable has become dislodged	**Ensure the bot is unplugged from a power source and you are properly grounded.** Remove the top cover (see "Removing the top cover") and inspect the connection between the power board and the Raspberry Pi. Ensure the connector is completely seated onto the located port.

Left *Barrel Jack connector*
Right *If the light (as shown above) is on, the bot is on. If not illuminated when plugged in, contact support.*

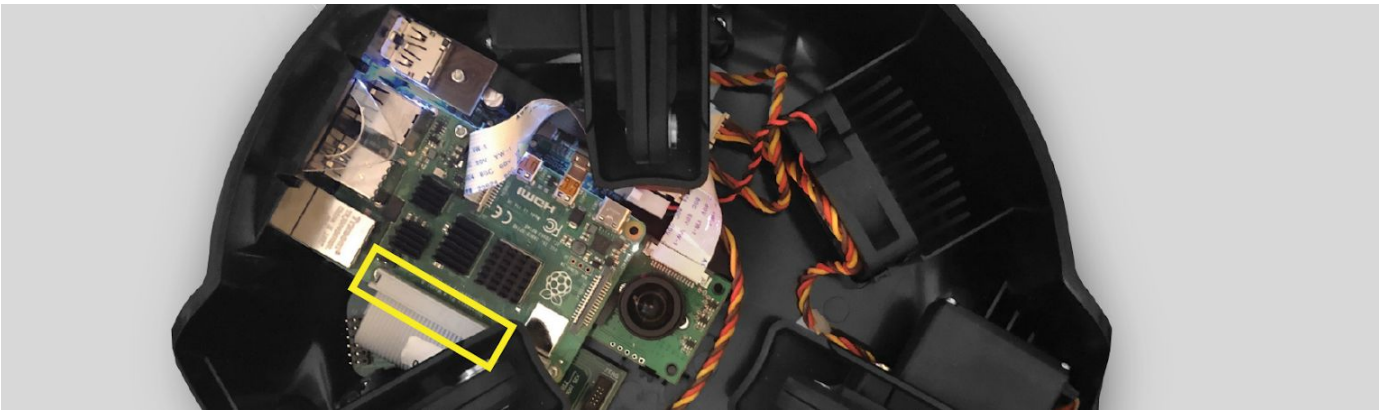

Location of 40-pin Ribbon Cable image

UI screen stuck on "*Project Moab*" for more than 3 minutes

Possible Cause	Solution
Software not booting up	Connect an HDMI compatible monitor to the HDMI slot in the side of the bot. Connect a USB compatible keyboard to one of the USB slots in the side of the bot. Login using the following credentials: ● User: pi ● Password: raspberry Execute the command "docker-compose down" to stop all services. Execute the command "docker-compose up" to start all services again.
Software/Firmware version out of date	Connect an HDMI compatible monitor to the HDMI slot in the side of the bot. Connect a USB compatible keyboard to one of the USB slots in the side of the bot. Login using the following credentials: ● User: pi ● Password: raspberry Execute the command "motd" to view the startup message, which includes the system version number in the line that reads "Moabian". Ensure it matches the latest version at: https://github.com/BonsaiAI/moabian/releases. If it does not, Install the latest version onto an SD Card using: https://github.com/BonsaiAI/moabian/wiki/Install-Moabian-from-Scratch
40-pin ribbon cable has become dislodged	**Ensure the bot is unplugged from a power source and you are properly grounded.** Remove the top cover (see "Removing the top cover") and inspect the connection between the power board and the Raspberry Pi. Ensure the connector is completely seated onto the located port.

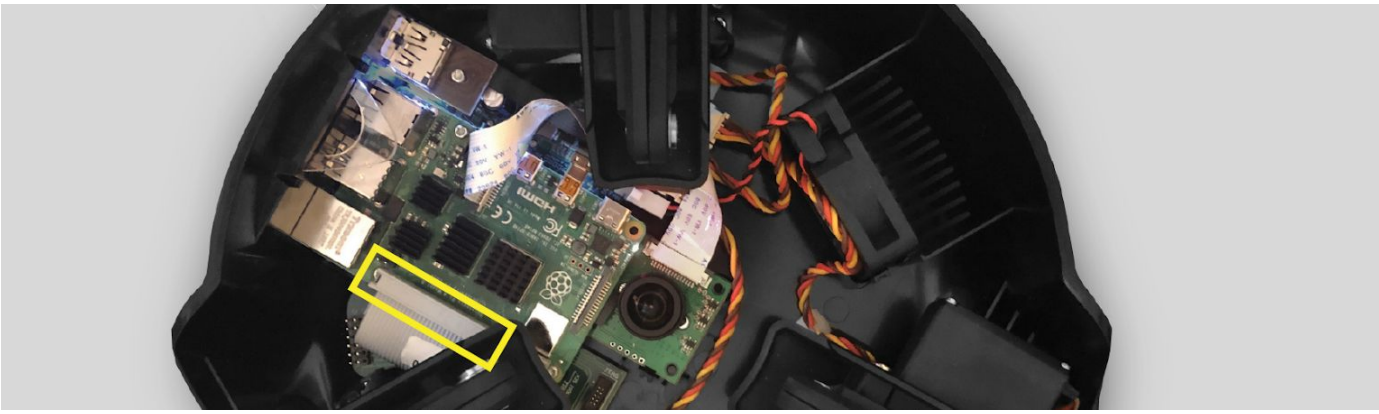

Location of 40-pin Ribbon Cable image

Ball unable to balance in CLASSIC or BRAIN mode	
Possible Cause	**Solution**
Ineffective Calibration	Run the calibration process again.
Room lighting too drastic for ball to be tracked successfully	Move to a room with gentler ceiling lighting and without any objects resembling the color of the balance ball.
Plate dirty and blocking vision tracking	Clean the plate. If the underside is dirty, remove the plate from the magnetic servo arms and wipe clean with water or a cleaning product that is safe to use with acrylic (PMMA). Avoid alcohols, acetone, and ammonia.
Camera ribbon cable disconnected or seated improperly	**Ensure the bot is unplugged from a power source and you are properly grounded**. After removing the top cover, inspect the camera ribbon cable and its connection points on either end. The contacts should be barely visible and all level to ensure a solid connection with all corresponding pins. Pull the black tabs from the connecting points on both sides of the ribbon cable connector, this will release the cable and allow for readjustment. Feed the cable back into the slot and press the black tab back into place.
Camera misaligned, unfocused, or scratched	1. Attach an HDMI compatible monitor to the rear of the bot. Connect a USB compatible keyboard to one of the USB slots in the side of the bot. 2. Login using the following credentials: ● User: pi ● Password: raspberry 3. Run the command: ● `$ raspivid -t 10000` 4. Observe the outputted camera visualization and see if the camera doesn't have the plate triangle in the center of its image. If this is the case, reseat the camera following the steps from the **Camera is disconnected from the enclosure** or **camera lens loose or unfocused** issue sections. If this command fails, the camera may not be configured/activated. You can use the command below to enable it again. Run the command: `$ sudo raspi-config` 1. Select option 5 for "Interfacing Options" 2. Select option P1 for "Camera" 3. When prompted, select "Yes" to enable the camera interface. 4. Select "OK" when the confirmation window is displayed. "Camera interface is enabled" 5. Select "Finish" option. 6. When prompted, select "Yes" to reboot the machine. **Note: If for some reason you were not prompted to reboot, it means the camera interface was already enabled.**

Bot turns off mid operation	
Possible Cause	**Solution**
Power supply is underpowered	Replace the power supply with the provided power supply GST60A12-P1J.
Balance object is too heavy	Replace balance object with balance ball provided.
Hardware is overheating	**Ensure the bot is unplugged from a power source and you are properly grounded**. Remove the top cover and ensure the fan is connected to the proper location. If located in a room with too hot ambient temperature, the fan may not be able to compensate for the temperature. Move to a cooler location.
Software is crashing	Fully restart the device by unplugging from the barrel jack for 30 seconds, then replugging. If the bot continues to crash, reinstall system software onto a new SD card by following instructions from: https://github.com/BonsaiAI/moabian/wiki/Install-Moabian-from-Scratch

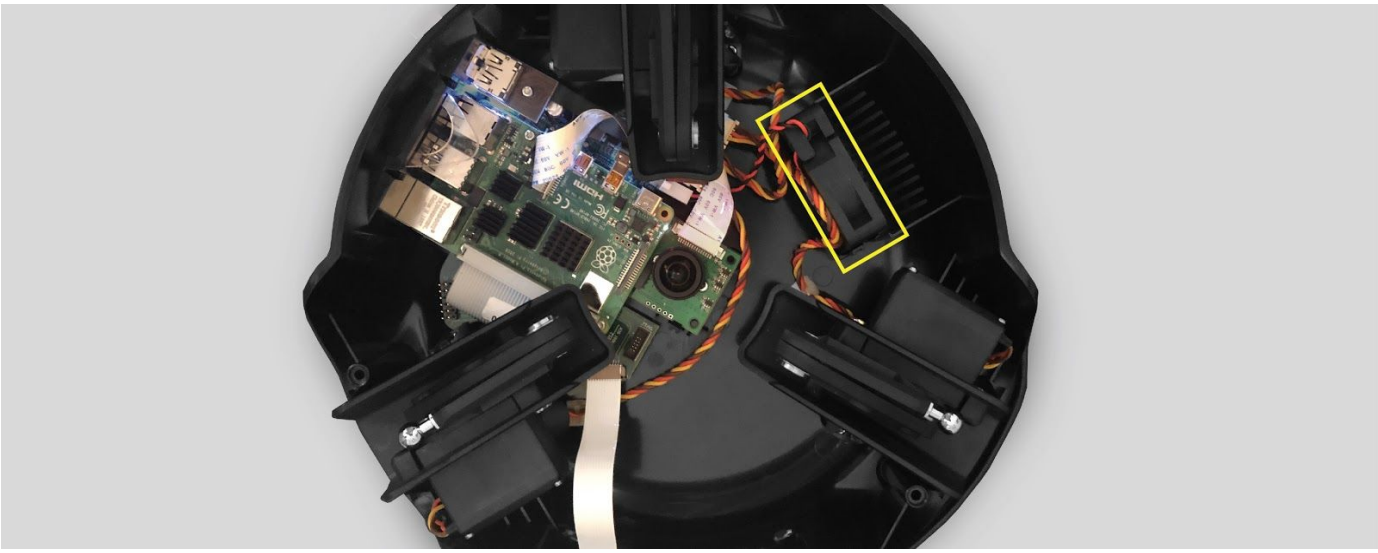

Location of fan

The plate came off of the arms

Possible Cause	Solution
Item stuck to ball joining or groove of magnetic plate	You can put the plate back on the arms by matching up the magnets in the plate to the arms. Ensure there is nothing stuck to either side of the ball joints

Plate correctly placed on arms

Plate detaches during movement operation

Possible Cause	Solution
Ineffective Calibration	Cycle back to calibration mode and rerun the Calibration mode
Software/Firmware is out of date	Fully restart the device by unplugging from the barrel jack for 30 seconds, then replugging. If the bot continues to crash, reinstall system software onto a new SD card by following instructions from: https://github.com/BonsaiAI/moabian/wiki/Install-Moabian-from-Scratch

No video stream from HDMI when connected	
Possible Cause	**Solution**
HDMI board is disconnected from Raspberry Pi board	**Ensure the bot is unplugged from a power source and you are properly grounded.** Remove the top cover (see “Removing the top cover”) and inspect the connection between the HDMI board and the Raspberry Pi. Ensure the connector is completely inserted into the located port.

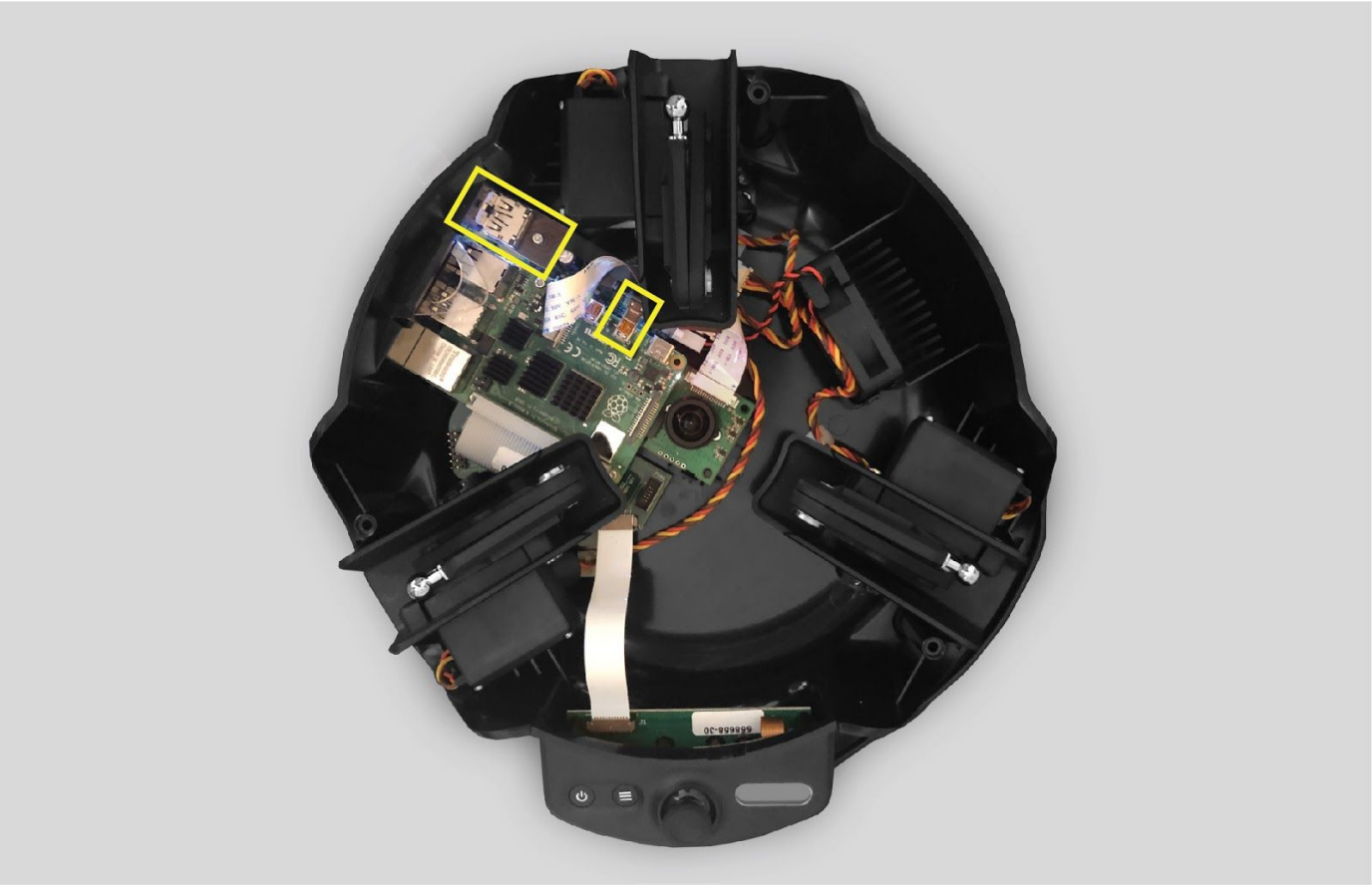

Location of HDMI port and its connection to the Raspberry Pi

Servos actuate in disjointed fashion	
Possible Cause	**Solution**
Servos attached to incorrect ports of internal power board	**Ensure the bot is unplugged from a power source and you are properly grounded.** Remove the top cover (see “Removing the top cover”). Ensure each servo is connected in the right orientation to the ports of the bot.

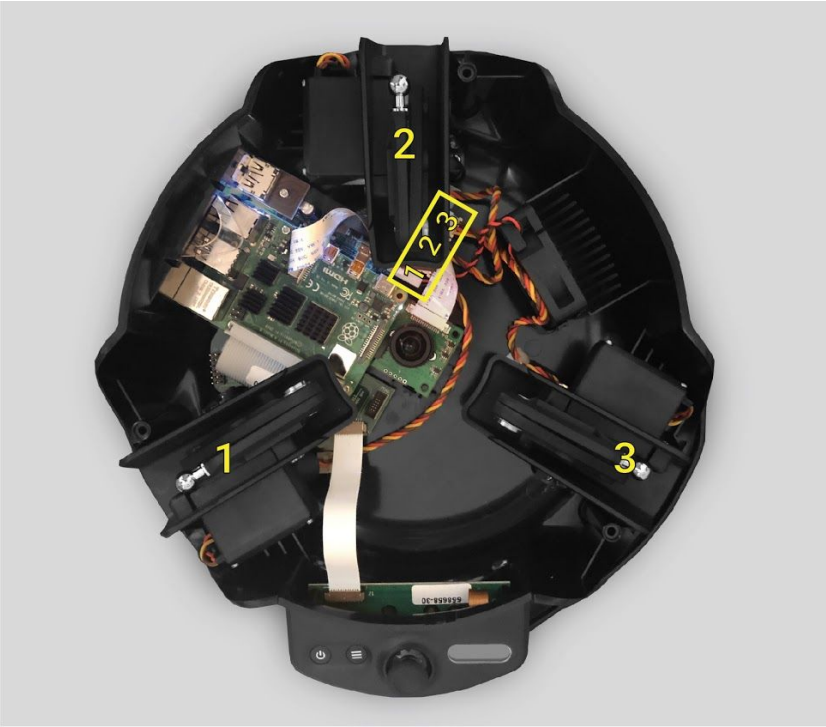

Location of servo ports in correct orientation

Camera lens loose or unfocused	
Possible Cause	**Solution**
Camera has been dropped, unscrewed accidentally, or loosened from vibrations.	If the lens is no longer attached to the camera, ensure the locking nut is on the lens threads. Then screw the lens into the lens housing. If the camera is simply unfocused, use the HDMI video feed described in the fourth solution section of the **Ball unable to balance in CLASSIC or BRAIN mode** to ensure the video feed from the camera is focused on the ball when the balance plate is at the operating height (arms bent at an angle of about 30°). Ensure the locking nut is not seated against the camera housing. Rotate the lens to change the focus of the camera. Then screw the locking nut down until it presses against the lens housing.

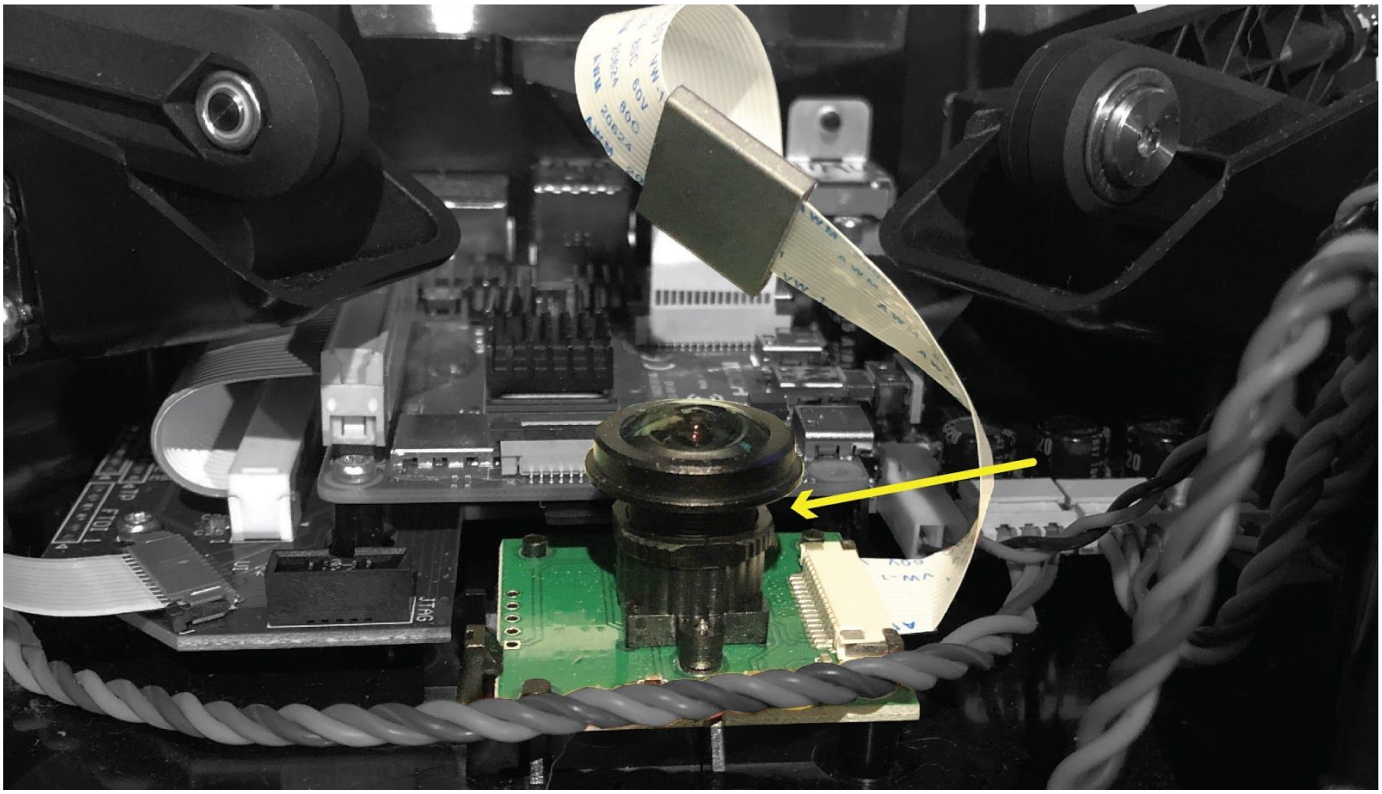

Arrow points to the location of the locking nut. Lens is screwed into the lens housing.

Camera is disconnected from the enclosure	
Possible Cause	**Solution (For bots with serial number M2-0000001 to M2-0000050)**
Camera has been dropped, unscrewed accidentally, or loosened from vibrations.	**Ensure the bot is unplugged from a power source and you are properly grounded.** Examine the enclosure and camera for damage. If there is any damage, do not use the Moab unit. Be careful of sharp broken pieces. Ensure all debris is cleaned up and kept away from children. Contact moab@microsoft.com Remove the top cover of the bot (see “Removing the top cover”). If there is no damage, remove the left servo housing and then remove the screws attaching the Raspberry Pi to the enclosure. Disconnect the ribbon cables and HDMI connection to the Raspberry Pi. Lift up the Raspberry Pi to easily access the camera. Align the holes on the camera PCB to the mounting pins that are part of the lower half of the enclosure and pull the tabs back to slide the camera board underneath. Use the reference image to ensure the camera is oriented correctly. If the camera needs to be secured tighter, insert a M2.5x8mm thread-forming screw through the camera board’s remaining mounting hole into the screw hole in the enclosure. Reattach the Pi, then servo to retest operation.

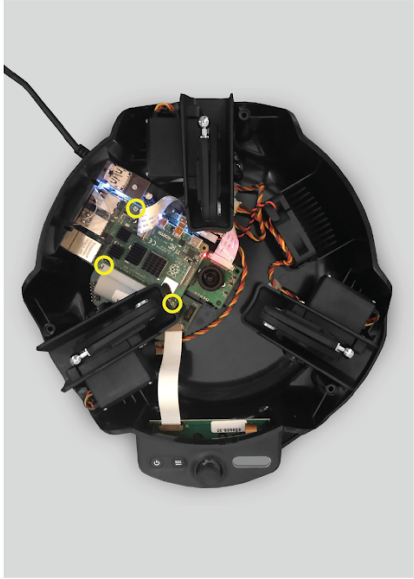
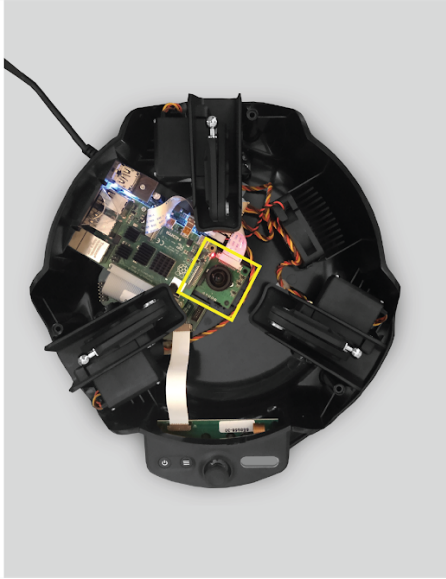

Left *Screws for left servo housing*
Middle *Location of screws attaching Raspberry Pi*
Right *Correct orientation of camera*

Possible Cause	Solution (For bots with serial number M2-0000050 to M2-0000500)
Camera has been unscrewed accidentally or loosened due to vibrations or a hard impact.	Examine the enclosure and camera for damage. If there is any damage, do not use the Moab unit. Be careful of sharp broken pieces. Ensure all debris is cleaned up and kept away from children. Contact moab@microsoft.com If there is no damage, ensure the camera is oriented correctly on the mounting pins (see reference image). Then, replace the M2.5x8mm thread-forming screw through the camera board's remaining mounting hole into the screw hole in the enclosure.

Something has broken. Ex. arms, white cover, or balance plate.

Possible Cause	Solution
Moab unit has been accidentally dropped or handled aggressively.	Do not use the Moab unit. Be careful of sharp broken pieces. Ensure all debris is cleaned up and kept away from children. Contact moab@microsoft.com

Buttons or thumbstick not working properly

Possible Cause	Solution
UI ribbon cable disconnected or seated improperly	**Ensure the bot is unplugged from a power source and you are properly grounded.** Remove the top cover of the bot and inspect the ribbon cable connecting the UI board to the Raspberry Pi. Inspect the UI ribbon cable and its connection points on either side. The contacts should be barely visible and all level to ensure a solid connection with all corresponding pins.
Software/Firmware is out of date	Fully restart the device by unplugging from the barrel jack for 30 seconds, then replugging. If the bot continues to crash, reinstall system software onto a new SD card by following instructions from: https://github.com/BonsaiAI/moabian/wiki/Install-Moabian-from-Scratch

One of the rubber feet came off the Moab bot

Possible Cause	Solution
Adhesive has weakened or been forcibly removed	Try to prevent debris from getting onto the adhesive of the rubber foot. Ensure there is no additional debris, lint, or dust on the Moab unit's bumper inset. Lightly press the rubber bumper into the inset for 5 seconds to ensure it is fully adhered.

Rubber foot properly placed into inset

One of the magnets came off of the plate

Possible Cause	Solution
Adhesive has weakened or been forcibly removed	Try to prevent debris from getting onto the adhesive disk. Ensure there is no additional debris, lint, or dust on either the magnet or the balance plate inset before pressing the magnet with the ½" diameter 3M VHB 4930 acrylic adhesive disk back into the inset. Lightly press the magnet into the inset for 5 seconds to ensure the magnet is fully adhered. Let the magnet set according to the adhesive instructions before reattaching the plate. Be careful with the balance plate in the future because the adhesive might not be as effective as before the magnet was dislodged.

Arm joints are too tight or too loose	
Possible Cause	**Solution**
Arm joint has been loosened due to vibrations.	Use a 3mm hex drive or 3mm hex key to adjust the screw in the arm joint. Do not over tighten this screw. You can permanently damage the arm joint.

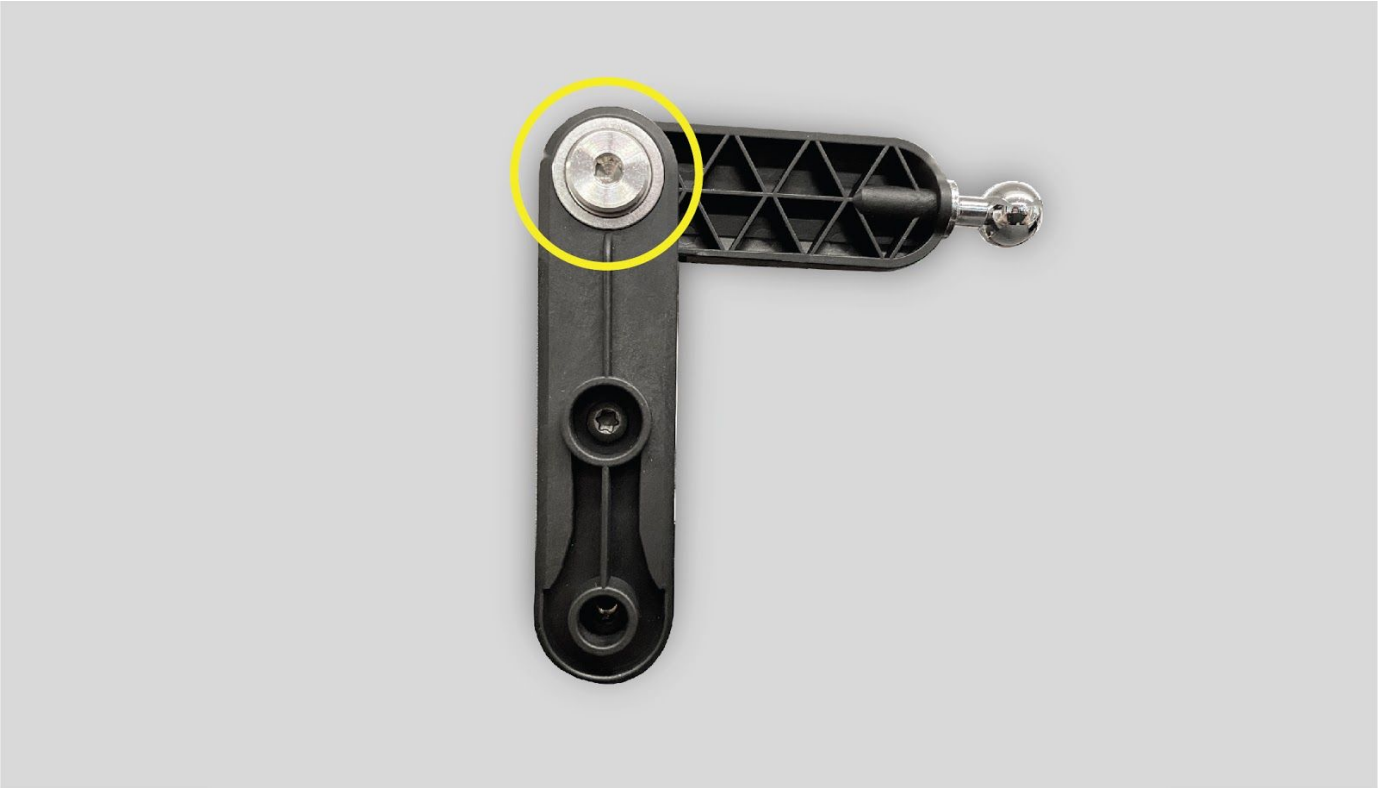

Location of arm joint screw

Arm has become disconnected from the servo motor	
Possible Cause	**Solution**
Arm has loosened due to vibrations, servo housing screws' label is off, Moab unit has been dropped.	**Ensure the bot is unplugged from a power source and you are properly grounded.** Remove the white cover (see "Removing the top cover"). Remove the three screws attaching the servo housing to the Moab unit's bottom shell. Use the access hole on the servo housing and tighten the T10 screw attaching the servo arm to the servo motor. Be careful to not strip any threads in the plastic when replacing each screw.

Left *Location of servo housing screws*
Right *Location of access hole to the servo housing*