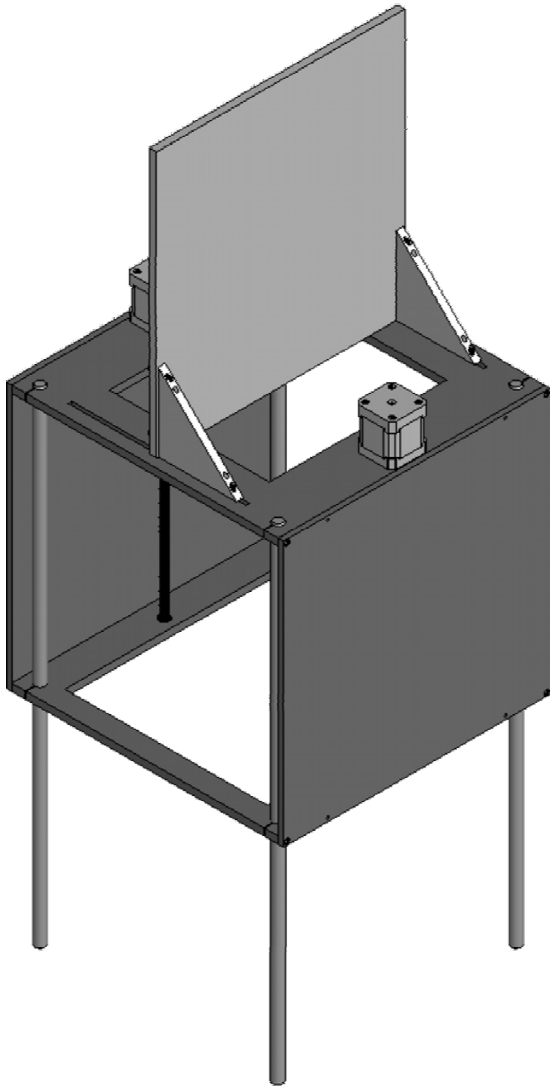

open source hardware

LICENSE INFORMATION

This documentation describes Open Hardware and is licensed under the CERN OHL v. 1.2.

You may redistribute and modify this documentation under the terms of the CERN OHL v.1.2. (http://ohwr.org/cernohl). This documentation is distributed WITHOUT ANY EXPRESS OR IMPLIED WARRANTY, INCLUDING OF MERCHANTABILITY, SATISFACTORY QUALITY AND FITNESS FOR A PARTICULAR PURPOSE. Please see the CERN OHL v.1.1 for applicable conditions

FIRST ANGLE PROJECTION

PROJECT: Chassis

DESCRIPTION: Chassis_Assembly

DWG NO. Chassis

A3

SCALE:1:10

SHEET 1 OF 11

SOLIDWORKS Student Edition for Academic Use Only

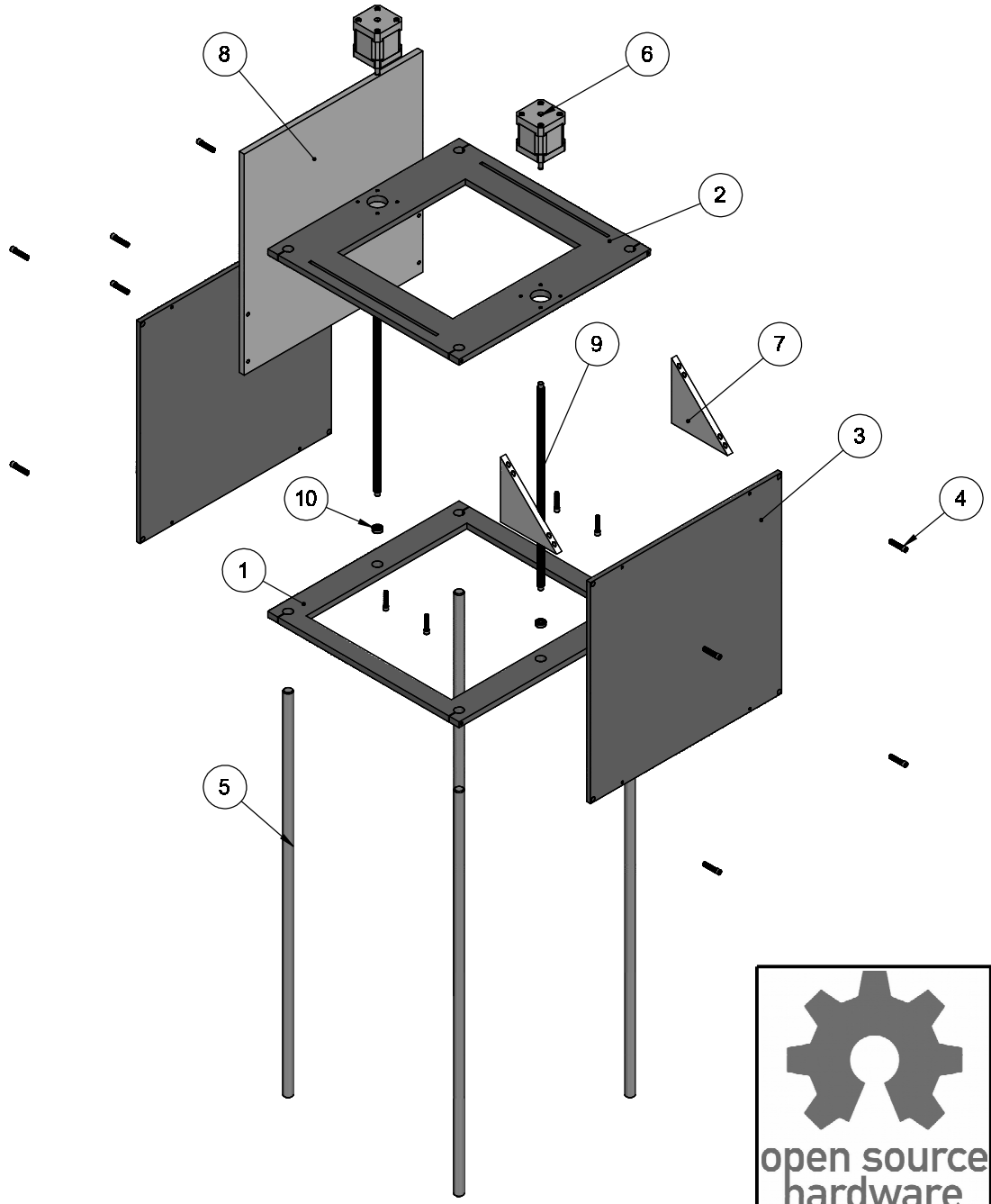

ITEM NO.	PART NUMBER	DESCRIPTION	QTY.
1	plateBottom	Base Plate	1
2	plateTop	Top Plate	1
3	side	Side plate - Enclosure	2
4	screwM4-10mm	Screw	16
5	6112K52	rod 12mm	4
6	NEMA 17 Stepper Motor	Stepper Motor	2
7	bracketPlateProjector	Bracket Plate Projector	2
8	plateProjectorMount	Mounting Plate for Projector	1
9	lead screw	Lead Screw	2
10	7804K112	Bearing Lead Screw	2

open source hardware

LICENSE INFORMATION

This documentation describes Open Hardware and is licensed under the CERN OHL v. 1.2.

You may redistribute and modify this documentation under the terms of the CERN OHL v.1.2. (http://ohwr.org/cernohl). This documentation is distributed WITHOUT ANY EXPRESS OR IMPLIED WARRANTY, INCLUDING OF MERCHANTABILITY, SATISFACTORY QUALITY AND FITNESS FOR A PARTICULAR PURPOSE. Please see the CERN OHL v.1.1 for applicable conditions

FIRST ANGLE PROJECTION

PROJECT: Chassis

DESCRIPTION: Chassis_Assembly

DWG NO. Chassis

A3

SCALE:1:10

SHEET 2 OF 11

SOLIDWORKS Student Edition for Academic Use Only

REVISIONS				
ZONE	REV.	DESCRIPTION	DATE	APPROVED

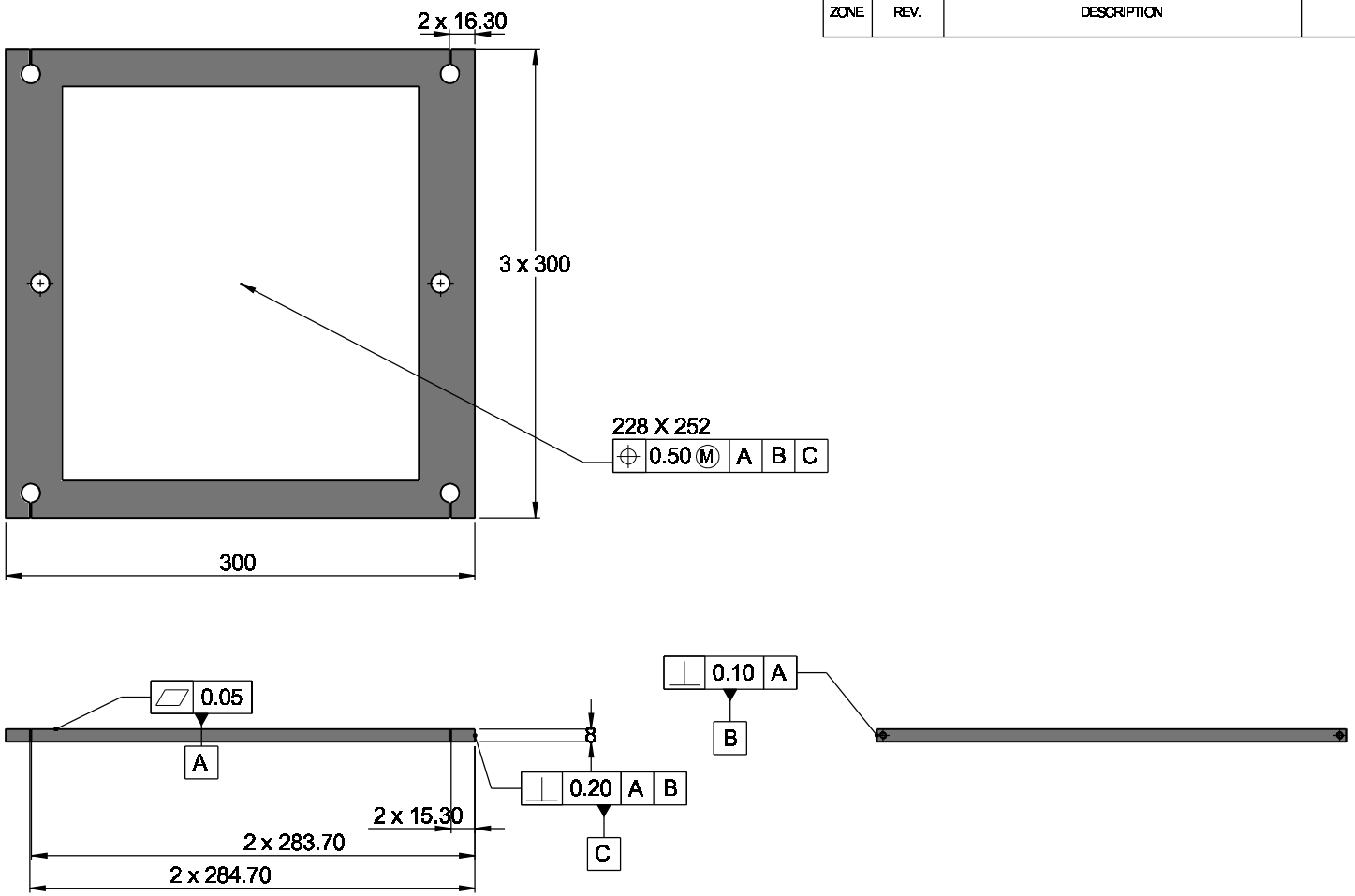

open source hardware

LICENSE INFORMATION

This documentation describes Open Hardware and is licensed under the CERN OHL v. 1.2.

You may redistribute and modify this documentation under the terms of the CERN OHL v.1.2. (http://ohwr.org/cernohl). This documentation is distributed WITHOUT ANY EXPRESS OR IMPLIED WARRANTY, INCLUDING OF MERCHANTABILITY, SATISFACTORY QUALITY AND FITNESS FOR A PARTICULAR PURPOSE. Please see the CERN OHL v.1.1 for applicable conditions

FIRST ANGLE PROJECTION

PROJECT: Chassis

DESCRIPTION: plateBottom

DWG NO. Chassis

A3

SCALE:1:5

SHEET 3 OF 11

SOLIDWORKS Student Edition for Academic Use Only

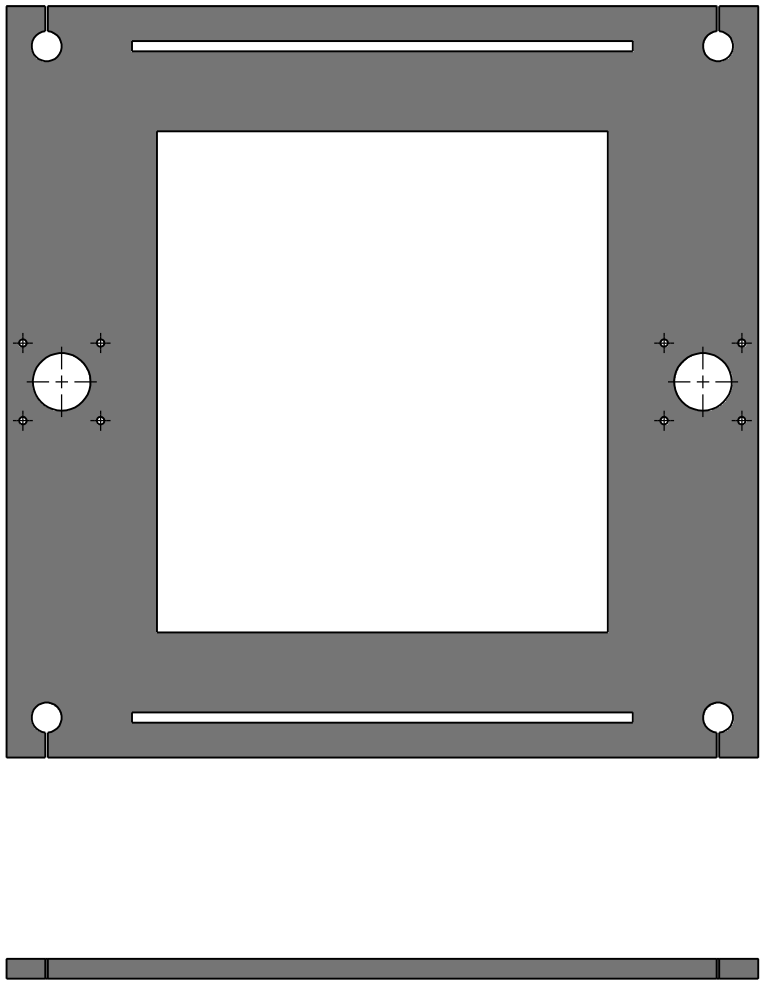

REVISIONS				
ZONE	REV.	DESCRIPTION	DATE	APPROVED

open source hardware

LICENSE INFORMATION

This documentation describes Open Hardware and is licensed under the CERN OHL v. 1.2.

You may redistribute and modify this documentation under the terms of the CERN OHL v.1.2. (http://ohwr.org/cernohl). This documentation is distributed WITHOUT ANY EXPRESS OR IMPLIED WARRANTY, INCLUDING OF MERCHANTABILITY, SATISFACTORY QUALITY AND FITNESS FOR A PARTICULAR PURPOSE. Please see the CERN OHL v.1.1 for applicable conditions

FIRST ANGLE PROJECTION

PROJECT: Chassis

DESCRIPTION: plateTop

DWG NO. Chassis

A3

SCALE:1:5

SHEET 4 OF 11

SOLIDWORKS Student Edition for Academic Use Only

REVISIONS				
ZONE	REV.	DESCRIPTION	DATE	APPROVED

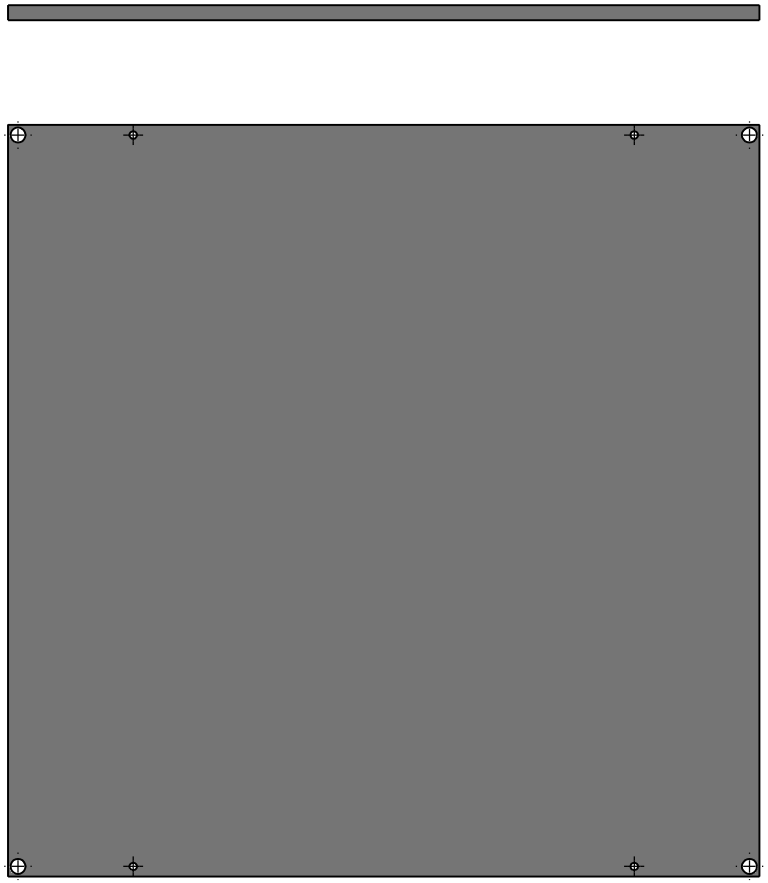

open source hardware

LICENSE INFORMATION

This documentation describes Open Hardware and is licensed under the CERN OHL v. 1.2.

You may redistribute and modify this documentation under the terms of the CERN OHL v.1.2. (http://ohwr.org/cernohl). This documentation is distributed WITHOUT ANY EXPRESS OR IMPLIED WARRANTY, INCLUDING OF MERCHANTABILITY, SATISFACTORY QUALITY AND FITNESS FOR A PARTICULAR PURPOSE. Please see the CERN OHL v.1.1 for applicable conditions

FIRST ANGLE PROJECTION

PROJECT: Chassis

DESCRIPTION: side

DWG NO. Chassis

A3

SCALE:1:2

SHEET 5 OF 11

SOLIDWORKS Student Edition for Academic Use Only

REVISIONS				
ZONE	REV.	DESCRIPTION	DATE	APPROVED

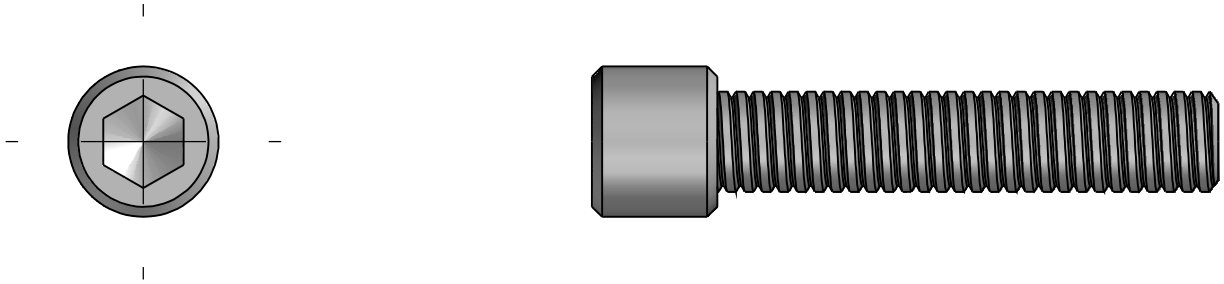

open source hardware

LICENSE INFORMATION

This documentation describes Open Hardware and is licensed under the CERN OHL v. 1.2.

You may redistribute and modify this documentation under the terms of the CERN OHL v.1.2. (http://ohwr.org/cernohl). This documentation is distributed WITHOUT ANY EXPRESS OR IMPLIED WARRANTY, INCLUDING OF MERCHANTABILITY, SATISFACTORY QUALITY AND FITNESS FOR A PARTICULAR PURPOSE. Please see the CERN OHL v.1.1 for applicable conditions

FIRST ANGLE PROJECTION

PROJECT: Chassis

DESCRIPTION: screwM4-10mm

DWG NO. Chassis

A3

SCALE:1:1

SHEET 6 OF 11

SOLIDWORKS Student Edition for Academic Use Only

REVISIONS				
ZONE	REV.	DESCRIPTION	DATE	APPROVED

open source hardware

LICENSE INFORMATION

This documentation describes Open Hardware and is licensed under the CERN OHL v. 1.2.

You may redistribute and modify this documentation under the terms of the CERN OHL v.1.2. (http://ohwr.org/cernohl). This documentation is distributed WITHOUT ANY EXPRESS OR IMPLIED WARRANTY, INCLUDING OF MERCHANTABILITY, SATISFACTORY QUALITY AND FITNESS FOR A PARTICULAR PURPOSE. Please see the CERN OHL v.1.1 for applicable conditions

FIRST ANGLE PROJECTION

PROJECT: Chassis

DESCRIPTION: rod-12mm

DWG NO. Chassis

A3

SCALE:1:5

SHEET 7 OF 11

SOLIDWORKS Student Edition for Academic Use Only

REVISIONS				
ZONE	REV.	DESCRIPTION	DATE	APPROVED

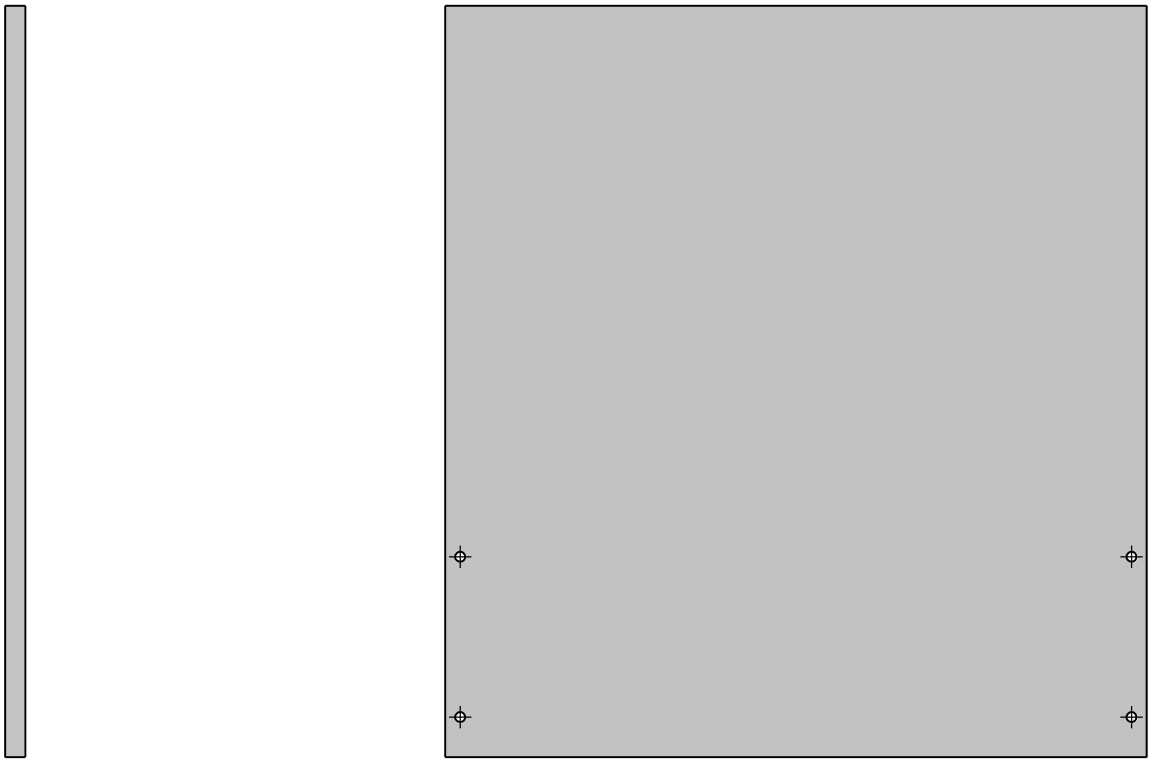

open source hardware

LICENSE INFORMATION

This documentation describes Open Hardware and is licensed under the CERN OHL v. 1.2.

You may redistribute and modify this documentation under the terms of the CERN OHL v.1.2. (http://ohwr.org/cernohl). This documentation is distributed WITHOUT ANY EXPRESS OR IMPLIED WARRANTY, INCLUDING OF MERCHANTABILITY, SATISFACTORY QUALITY AND FITNESS FOR A PARTICULAR PURPOSE. Please see the CERN OHL v.1.1 for applicable conditions

FIRST ANGLE PROJECTION

PROJECT: Chassis

DESCRIPTION: plateProjectorMount

DWG NO. Chassis

A3

SCALE:1:5

SHEET 8 OF 11

SOLIDWORKS Student Edition for Academic Use Only

REVISIONS				
ZONE	REV.	DESCRIPTION	DATE	APPROVED

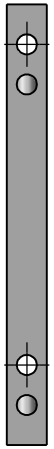

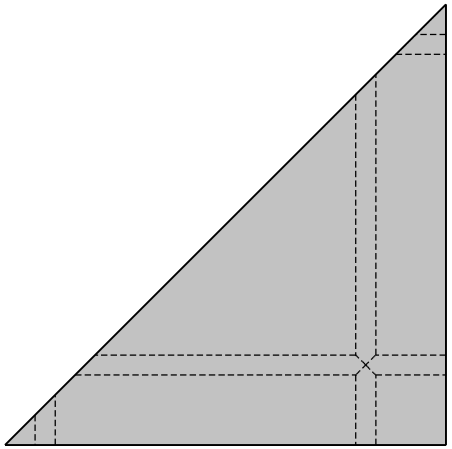

open source hardware

LICENSE INFORMATION

This documentation describes Open Hardware and is licensed under the CERN OHL v. 1.2.

You may redistribute and modify this documentation under the terms of the CERN OHL v.1.2. (http://ohwr.org/cernohl). This documentation is distributed WITHOUT ANY EXPRESS OR IMPLIED WARRANTY, INCLUDING OF MERCHANTABILITY, SATISFACTORY QUALITY AND FITNESS FOR A PARTICULAR PURPOSE. Please see the CERN OHL v.1.1 for applicable conditions

FIRST ANGLE PROJECTION

PROJECT: Chassis

DESCRIPTION: bracketPlateProjector

DWG NO. Chassis

A3

SCALE:1:1

SHEET 9 OF 11

SOLIDWORKS Student Edition for Academic Use Only

REVISIONS				
ZONE	REV.	DESCRIPTION	DATE	APPROVED

open source hardware

LICENSE INFORMATION

This documentation describes Open Hardware and is licensed under the CERN OHL v. 1.2.

You may redistribute and modify this documentation under the terms of the CERN OHL v.1.2. (http://ohwr.org/cernohl). This documentation is distributed WITHOUT ANY EXPRESS OR IMPLIED WARRANTY, INCLUDING OF MERCHANTABILITY, SATISFACTORY QUALITY AND FITNESS FOR A PARTICULAR PURPOSE. Please see the CERN OHL v.1.1 for applicable conditions

FIRST ANGLE PROJECTION

PROJECT: Chassis

DESCRIPTION: lead screw

DWG NO. Chassis

A3

SCALE:1:2

SHEET 10 OF 11

SOLIDWORKS Student Edition for Academic Use Only

REVISIONS				
ZONE	REV.	DESCRIPTION	DATE	APPROVED

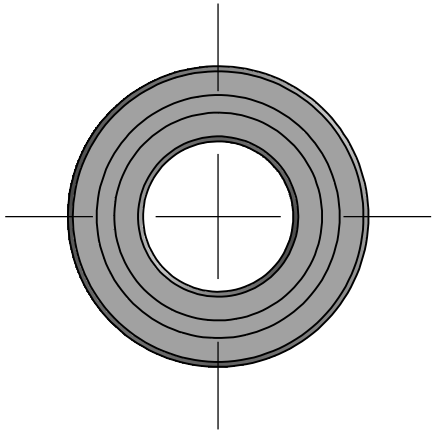

open source hardware

LICENSE INFORMATION

This documentation describes Open Hardware and is licensed under the CERN OHL v. 1.2.

You may redistribute and modify this documentation under the terms of the CERN OHL v.1.2. (http://ohwr.org/cernohl). This documentation is distributed WITHOUT ANY EXPRESS OR IMPLIED WARRANTY, INCLUDING OF MERCHANTABILITY, SATISFACTORY QUALITY AND FITNESS FOR A PARTICULAR PURPOSE. Please see the CERN OHL v.1.1 for applicable conditions

FIRST ANGLE PROJECTION

PROJECT: Chassis

DESCRIPTION: bearingLeadScrew

DWG NO. Chassis

A3

SCALE:1:0.1

SHEET 11 OF 11

SOLIDWORKS Student Edition for Academic Use Only