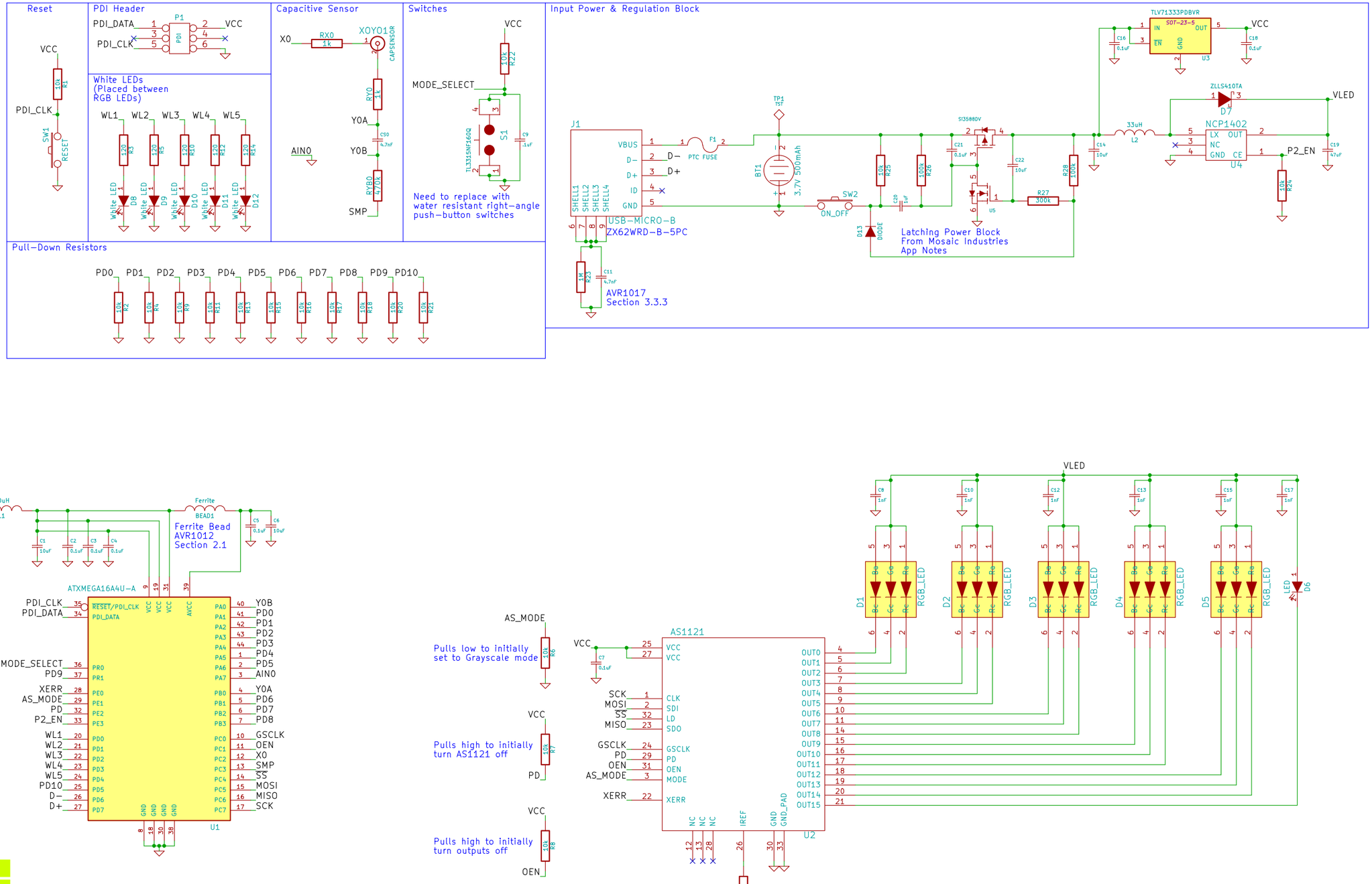

Projects and Stuff

open source hardware

Projects and Stuff LLC		
File: Chameleon.sch		
Sheet: /		
Title: Chameleon Drink Coasters		
Size: B	Date: 5 oct 2013	Rev: 2.0
KiCad E.D.A. eeschema (2013-07-07 BZR 4022)-stable		Id: 1/1