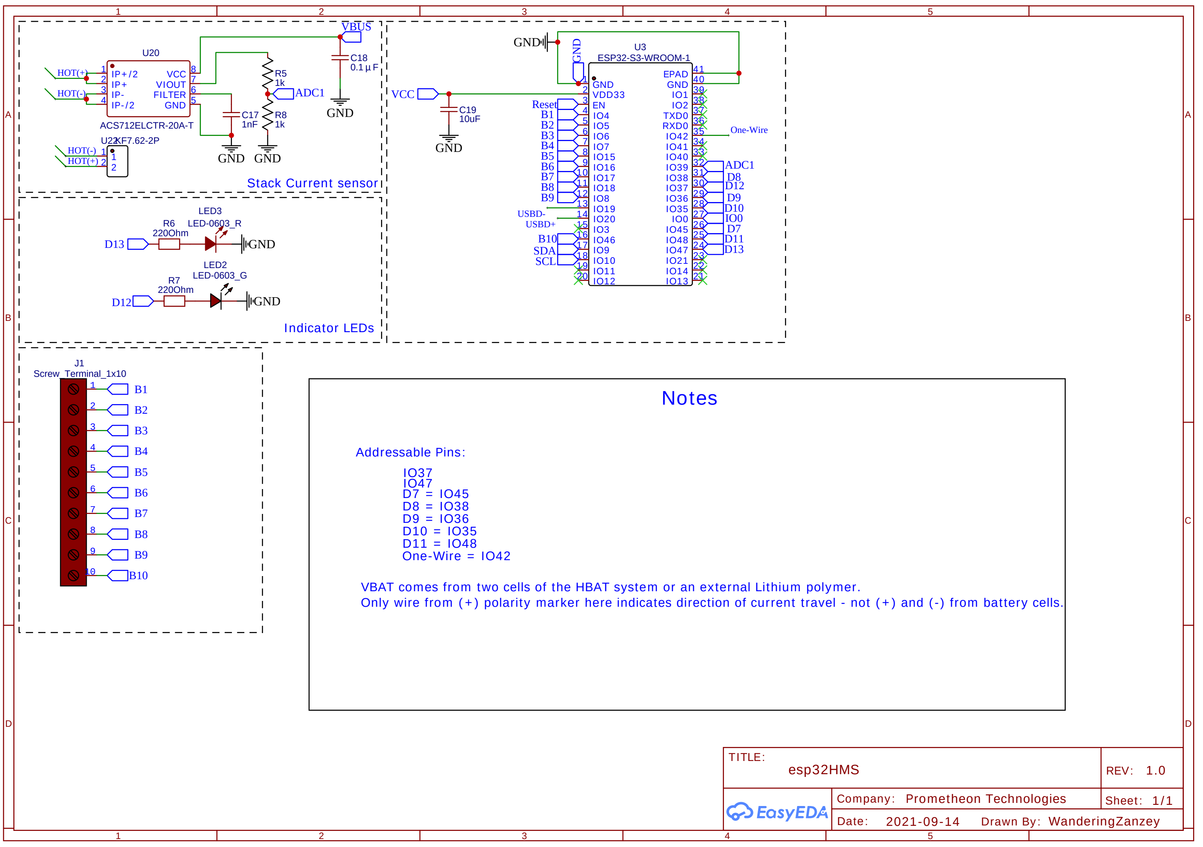
Stack Current sensor
Indicator LEDs
U20
ACS712ELCTR-20A-T
U2
ZKF7.62-2P
U3
ESP32-S3-WROOM-1
LED3
LED-0603_R
LED2
LED-0603_G
J1
Screw_Terminal_1x10
VBUS
ADC1
GND
VCC
One-Wire
USBD-
USBD+
SDA
SCL
Notes
Addressable Pins:
IO37
IO47
D7 = IO45
D8 = IO38
D9 = IO36
D10 = IO35
D11 = IO48
One-Wire = IO42
VBAT comes from two cells of the HBAT system or an external Lithium polymer.
Only wire from (+) polarity marker here indicates direction of current travel - not (+) and (-) from battery cells.
TITLE:
esp32HMS
REV: 1.0
Company: Prometheon Technologies
Sheet: 1/1
Date: 2021-09-14
Drawn By: WanderingZanzey

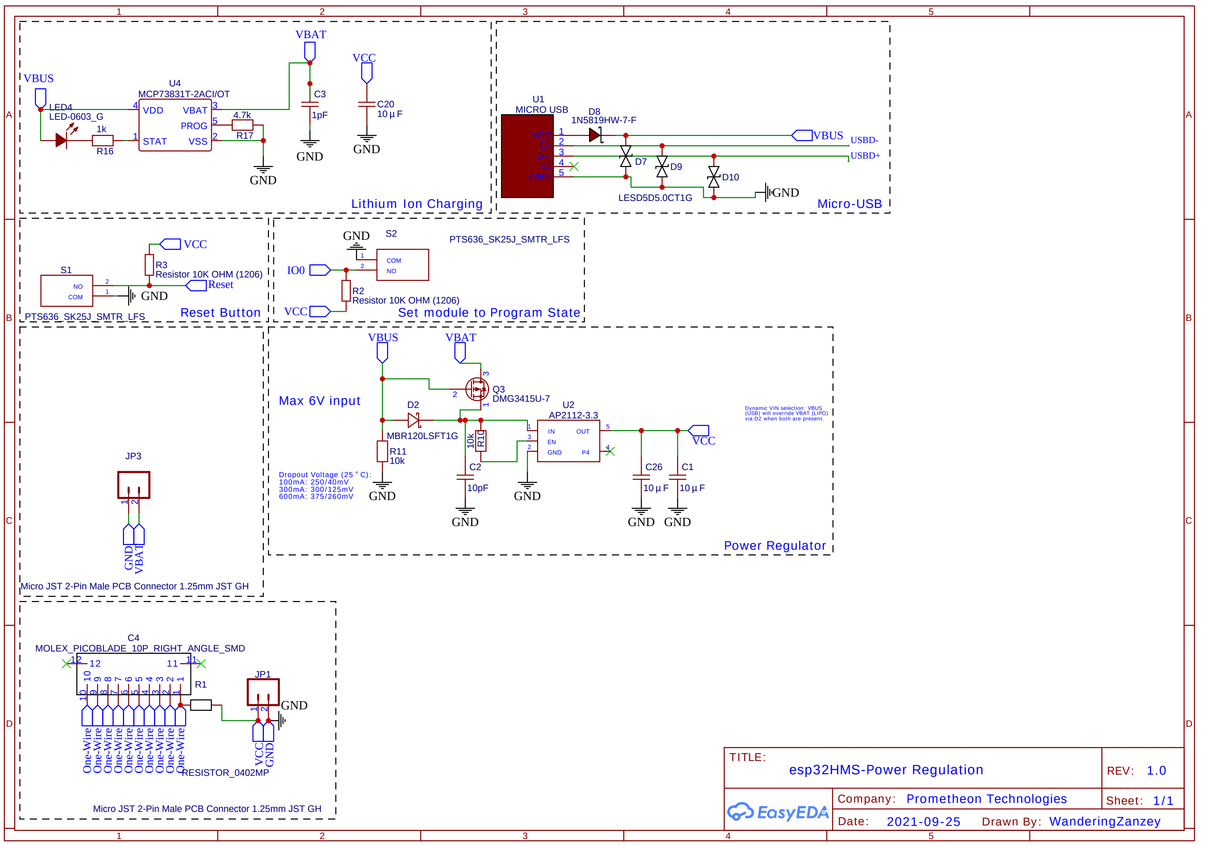
Lithium Ion Charging
U4
MCP73831T-2ACI/OT
LED4
LED-0603_G
U1
MICRO USB
D8
1N5819HW-7-F
LESD5D5.0CT1G
Micro-USB
VBUS
USBD-
USBD+
Reset Button
S1
PTS636_SK25J_SMTR_LFS
Resistor 10K OHM (1206)
Set module to Program State
S2
Max 6V input
Q3
DMG3415U-7
U2
AP2112-3.3
MBR120LSFT1G
Dropout Voltage (25 ° C):
100mA: 250/40mV
300mA: 300/125mV
600mA: 375/260mV
Power Regulator
JP3
Micro JST 2-Pin Male PCB Connector 1.25mm JST GH
C4
MOLEX_PICOBLADE_10P_RIGHT_ANGLE_SMD
RESISTOR_0402MP
JP1
TITLE:
esp32HMS-Power Regulation
REV: 1.0
Company: Prometheon Technologies
Sheet: 1/1
Date: 2021-09-25
Drawn By: WanderingZanzey

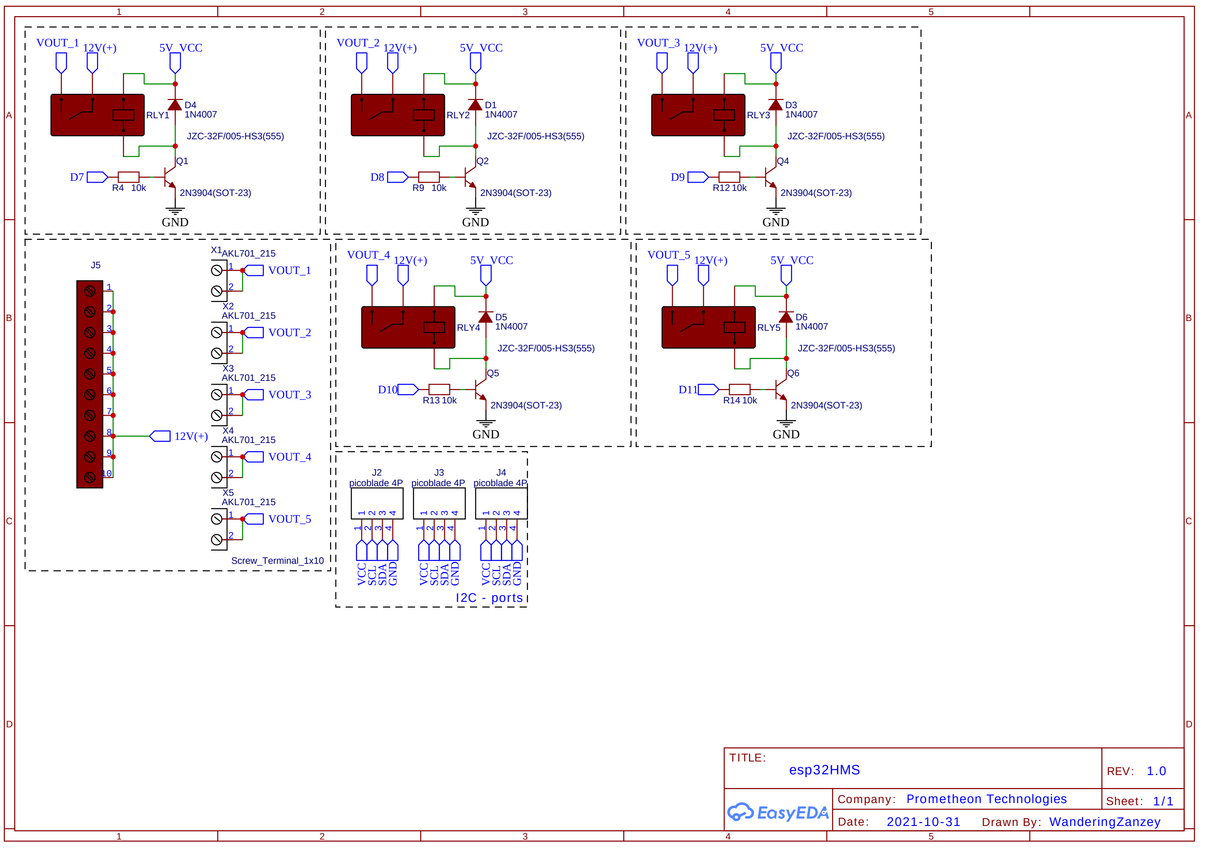
VOUT_1
VOUT_2
VOUT_3
VOUT_4
VOUT_5
12V(+)
5V_VCC
RLY1
RLY2
RLY3
RLY4
RLY5
JZC-32F/005-HS3(555)
2N3904(SOT-23)
J5
Screw_Terminal_1x10
AKL701_215
J2
J3
J4
picoblade 4P
I2C - ports
TITLE:
esp32HMS
REV: 1.0
Company: Prometheon Technologies
Sheet: 1/1
Date: 2021-10-31
Drawn By: WanderingZanzey