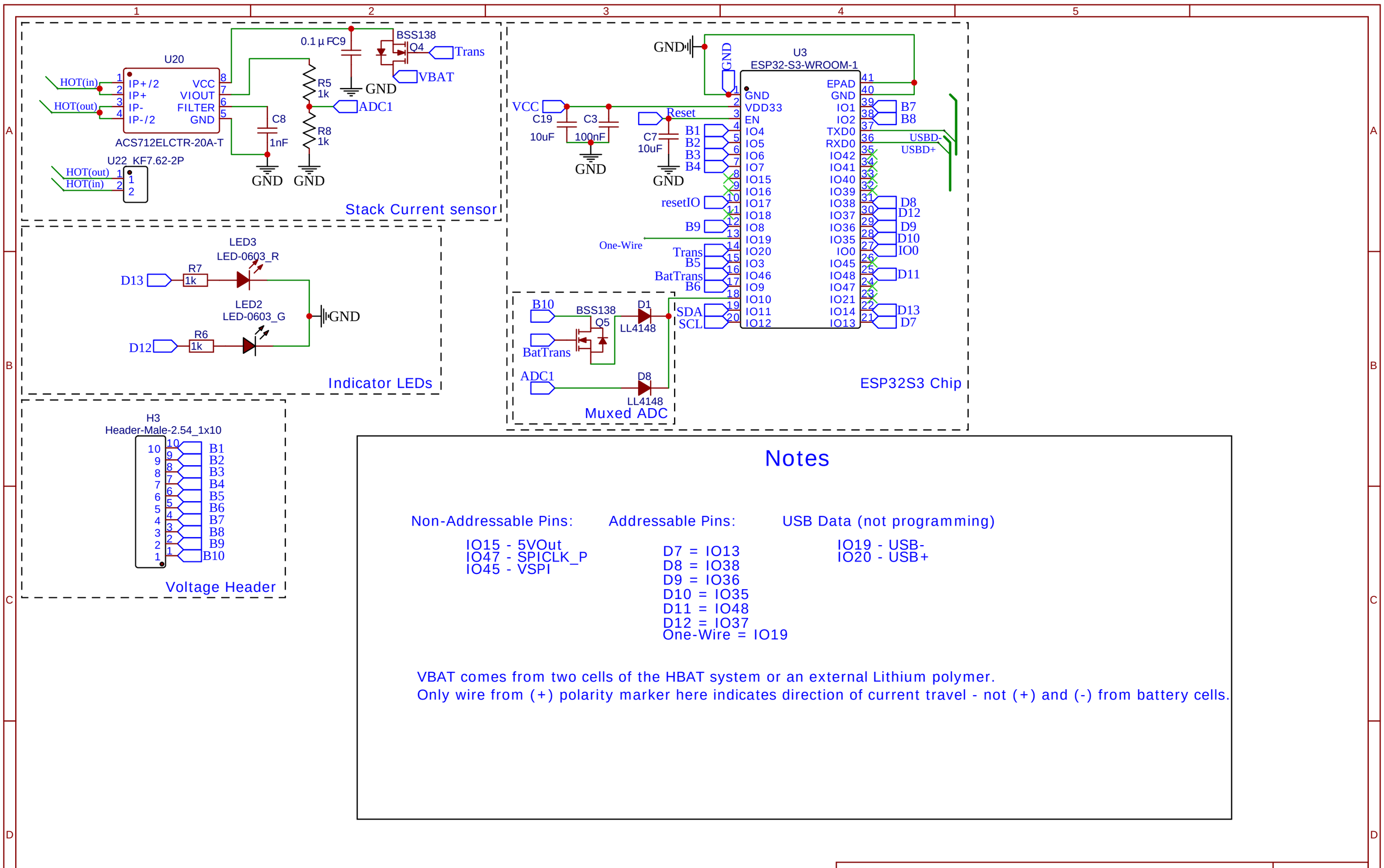

TITLE: esp32HMS	REV: 1.0
Company: Prometheon Technologies	Sheet: 1/1
Date: 2021-09-14 Drawn By: WanderingZanzey	

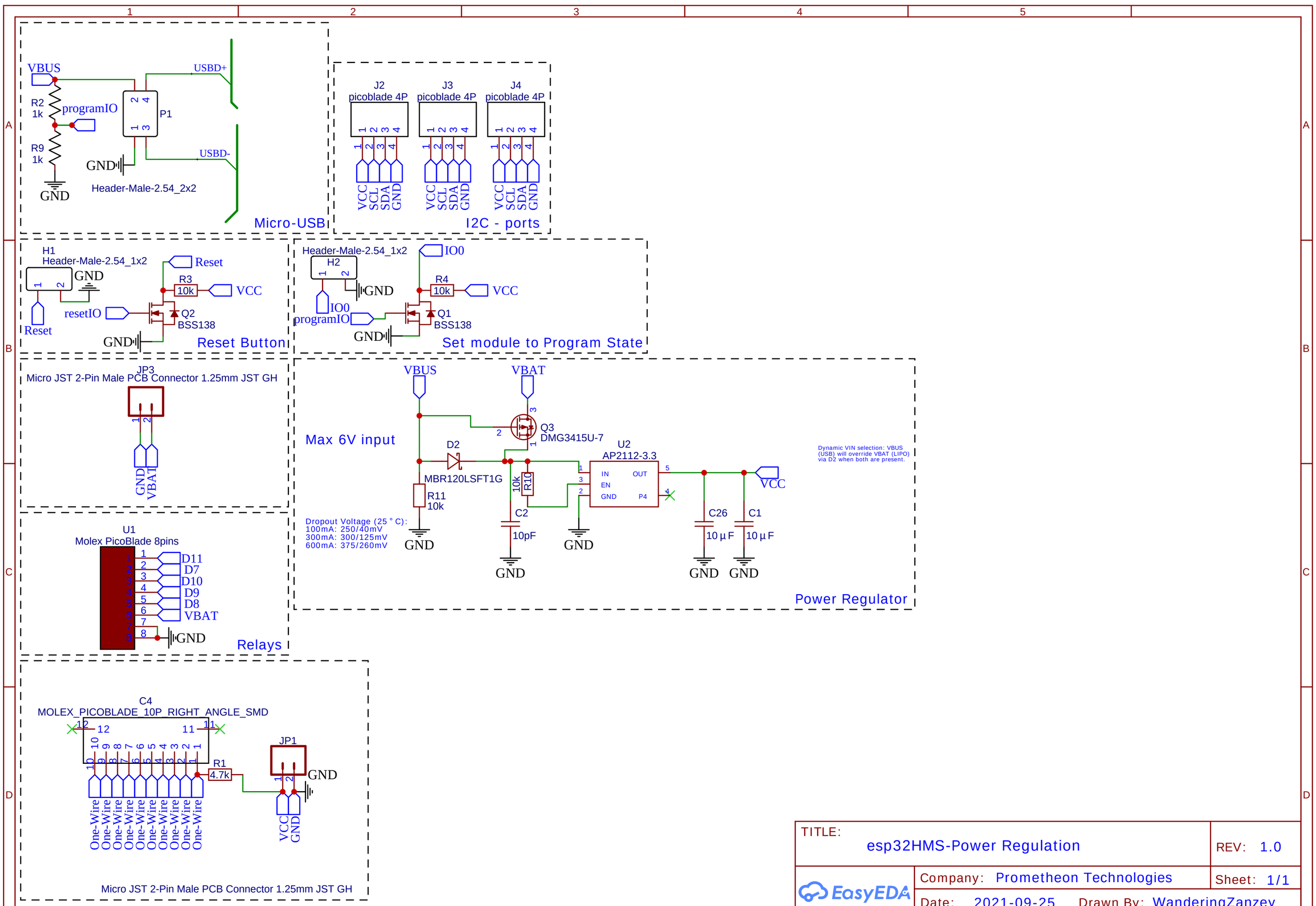

TITLE: esp32HMS-Power Regulation	REV: 1.0
Company: Prometheon Technologies	Sheet: 1/1
Date: 2021-09-25 Drawn By: WanderingZanzey	