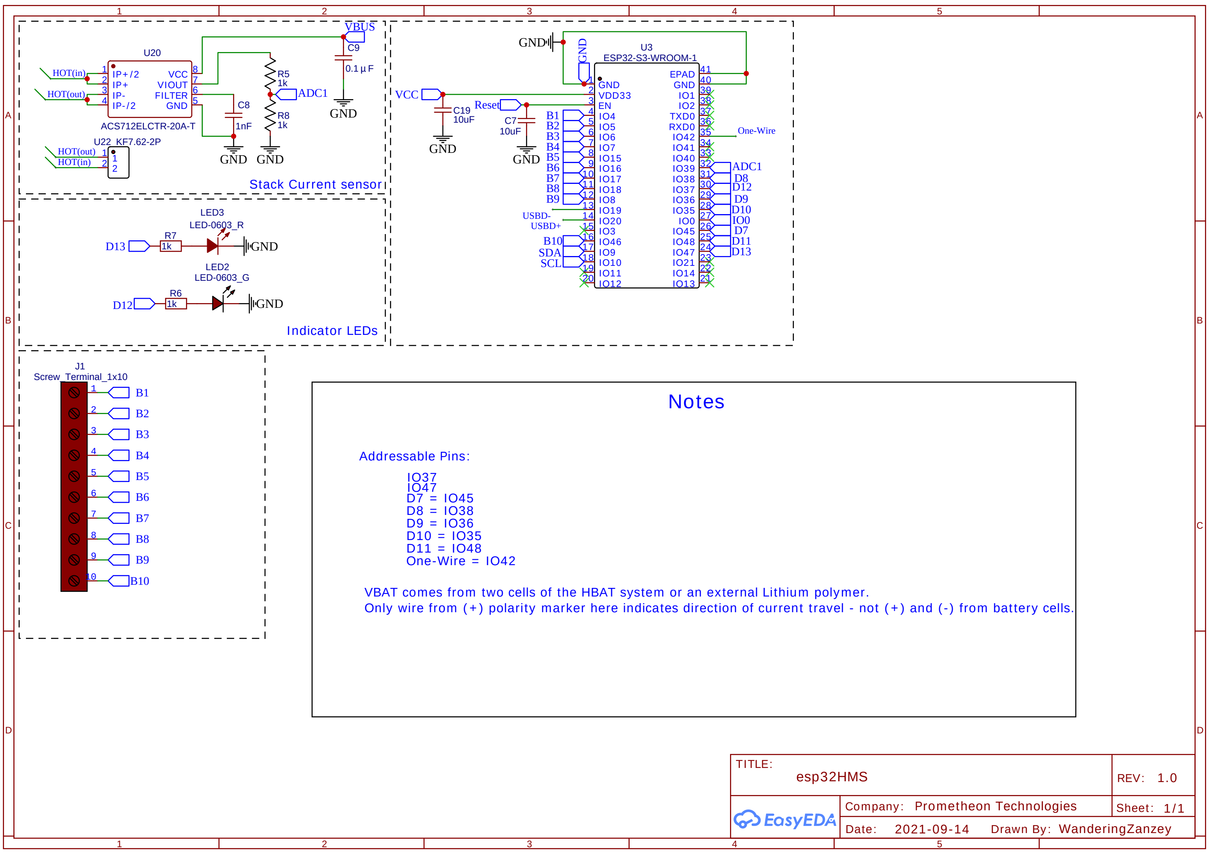
U20
ACS712ELCTR-20A-T
U22_KF7.62-2P
HOT(in)
HOT(out)
IP+/2
IP+
IP-
IP-/2
VCC
VIOUT
FILTER
GND
VBUS
C9
0.1µF
R5
1k
ADC1
C8
1nF
R8
1k
GND
Stack Current sensor
U3
ESP32-S3-WROOM-1
C19
10uF
C7
10uF
Reset
VCC
B1
B2
B3
B4
B5
B6
B7
B8
B9
B10
USBD-
USBD+
SDA
SCL
One-Wire
ADC1
D8
D12
D9
D10
IO0
D7
D11
D13
LED3
LED-0603_R
D13
R7
1k
LED2
LED-0603_G
D12
R6
1k
Indicator LEDs
J1
Screw_Terminal_1x10
Notes
Addressable Pins:
IO37
IO47
D7 = IO45
D8 = IO38
D9 = IO36
D10 = IO35
D11 = IO48
One-Wire = IO42
VBAT comes from two cells of the HBAT system or an external Lithium polymer.
Only wire from (+) polarity marker here indicates direction of current travel - not (+) and (-) from battery cells.
TITLE:
esp32HMS
REV: 1.0
Company: Prometheon Technologies
Sheet: 1/1
Date: 2021-09-14
Drawn By: WanderingZanzey

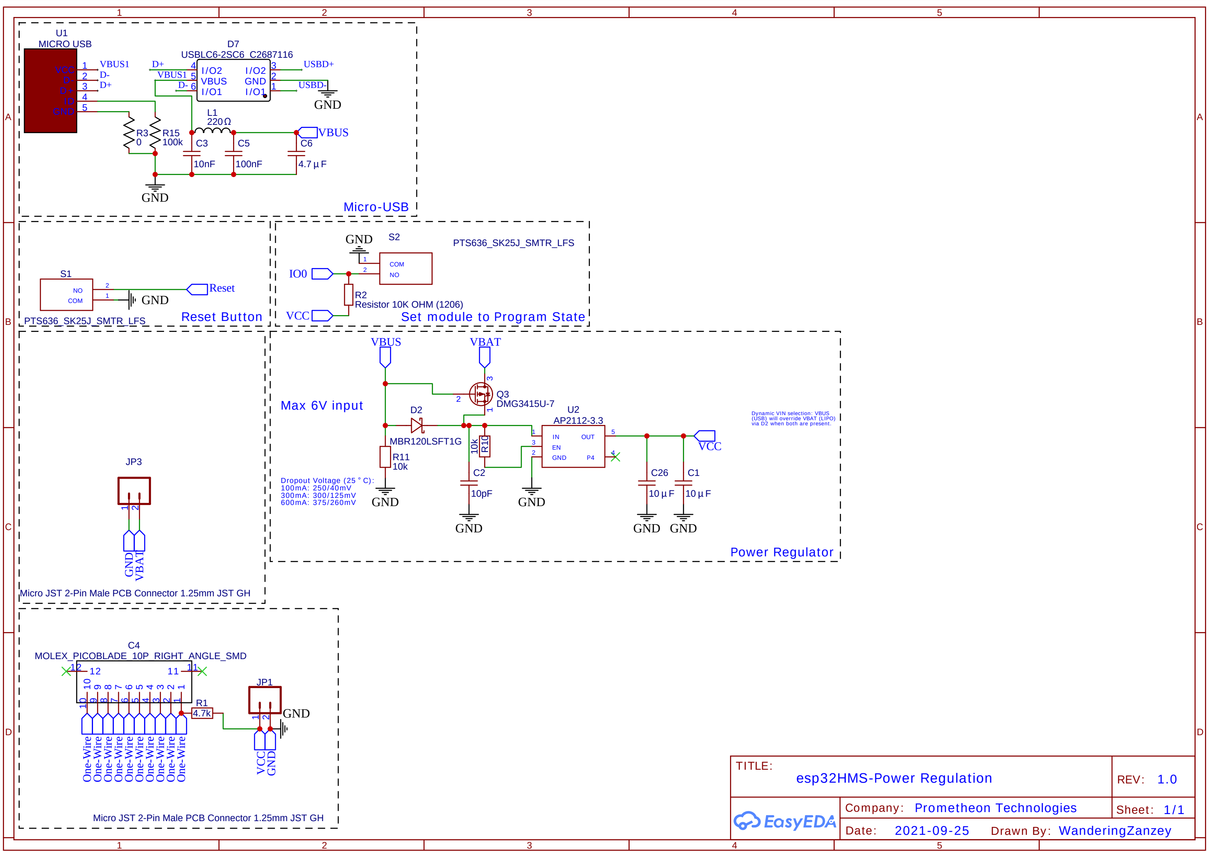
U1
MICRO USB
D7
USBLC6-2SC6 C2687116
VBUS1
D-
D+
USBD+
USBD-
R3
0
R15
100k
L1
220Ω
C3
10nF
C5
100nF
C6
4.7µF
VBUS
Micro-USB
S1
PTS636_SK25J_SMTR_LFS
Reset
Reset Button
S2
PTS636_SK25J_SMTR_LFS
IO0
R2
Resistor 10K OHM (1206)
VCC
Set module to Program State
JP3
GND
VBAT
Micro JST 2-Pin Male PCB Connector 1.25mm JST GH
VBUS
VBAT
Max 6V input
Q3
DMG3415U-7
D2
MBR120LSFT1G
R11
10k
R12
10k
C2
10pF
U2
AP2112-3.3
IN
OUT
EN
GND
C26
10µF
C1
10µF
VCC
Dynamic VIN selection: VBUS (USB) will override VBAT (LiPO) via D2 when both are present.
Dropout Voltage (25 ° C):
100mA: 250/40mV
300mA: 300/125mV
600mA: 375/260mV
Power Regulator
C4
MOLEX_PICOBLADE_10P_RIGHT_ANGLE_SMD
R1
4.7k
JP1
One-Wire
VCC
GND
Micro JST 2-Pin Male PCB Connector 1.25mm JST GH
TITLE:
esp32HMS-Power Regulation
REV: 1.0
Company: Prometheon Technologies
Sheet: 1/1
Date: 2021-09-25
Drawn By: WanderingZanzey

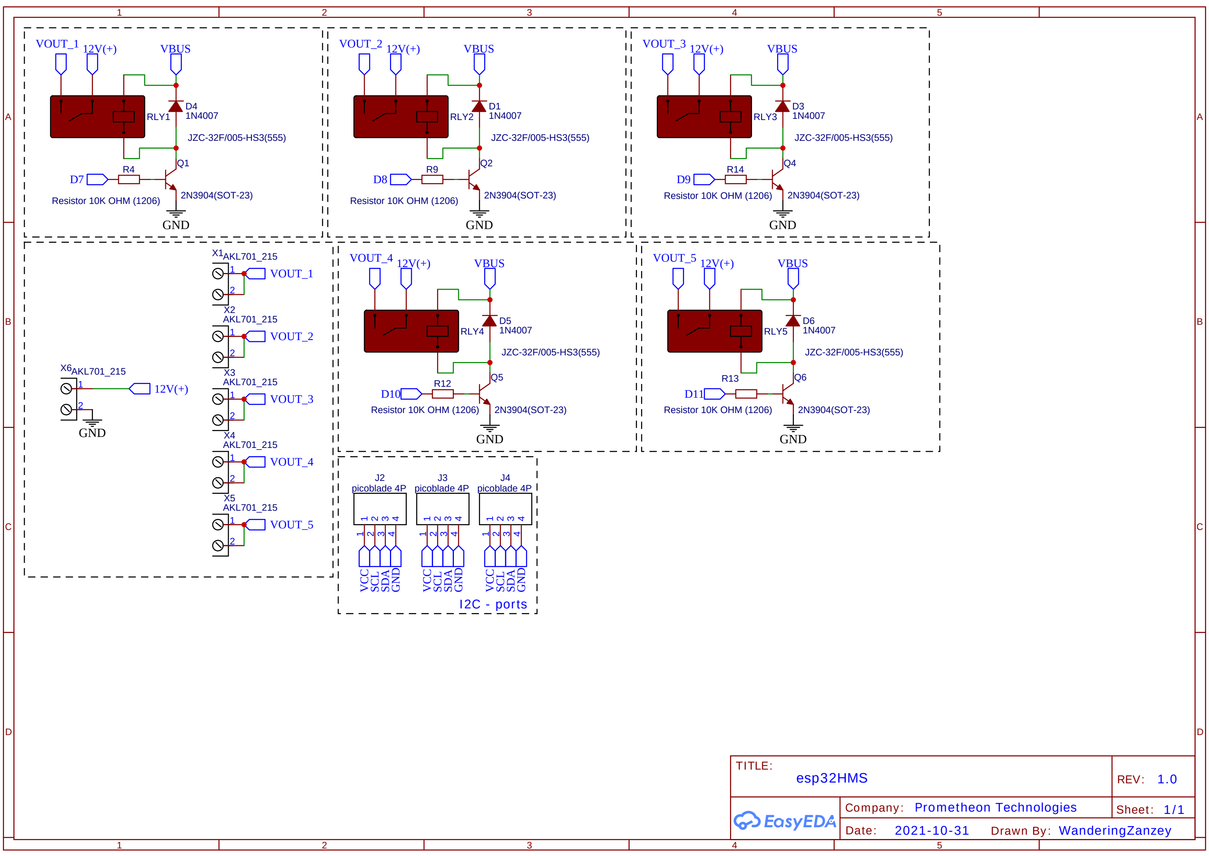
VOUT_1
12V(+)
VBUS
RLY1
D4
1N4007
JZC-32F/005-HS3(555)
D7
R4
Q1
Resistor 10K OHM (1206)
2N3904(SOT-23)
GND
VOUT_2
RLY2
D1
1N4007
D8
R9
Q2
VOUT_3
RLY3
D3
1N4007
D9
R14
Q4
X1
AKL701_215
X2
X3
X4
X5
X6
VOUT_4
RLY4
D5
1N4007
D10
R12
Q5
VOUT_5
RLY5
D6
1N4007
D11
R13
Q6
J2
J3
J4
picoblade 4P
VCC
SCL
SDA
GND
I2C - ports
TITLE:
esp32HMS
REV: 1.0
Company: Prometheon Technologies
Sheet: 1/1
Date: 2021-10-31
Drawn By: WanderingZanzey