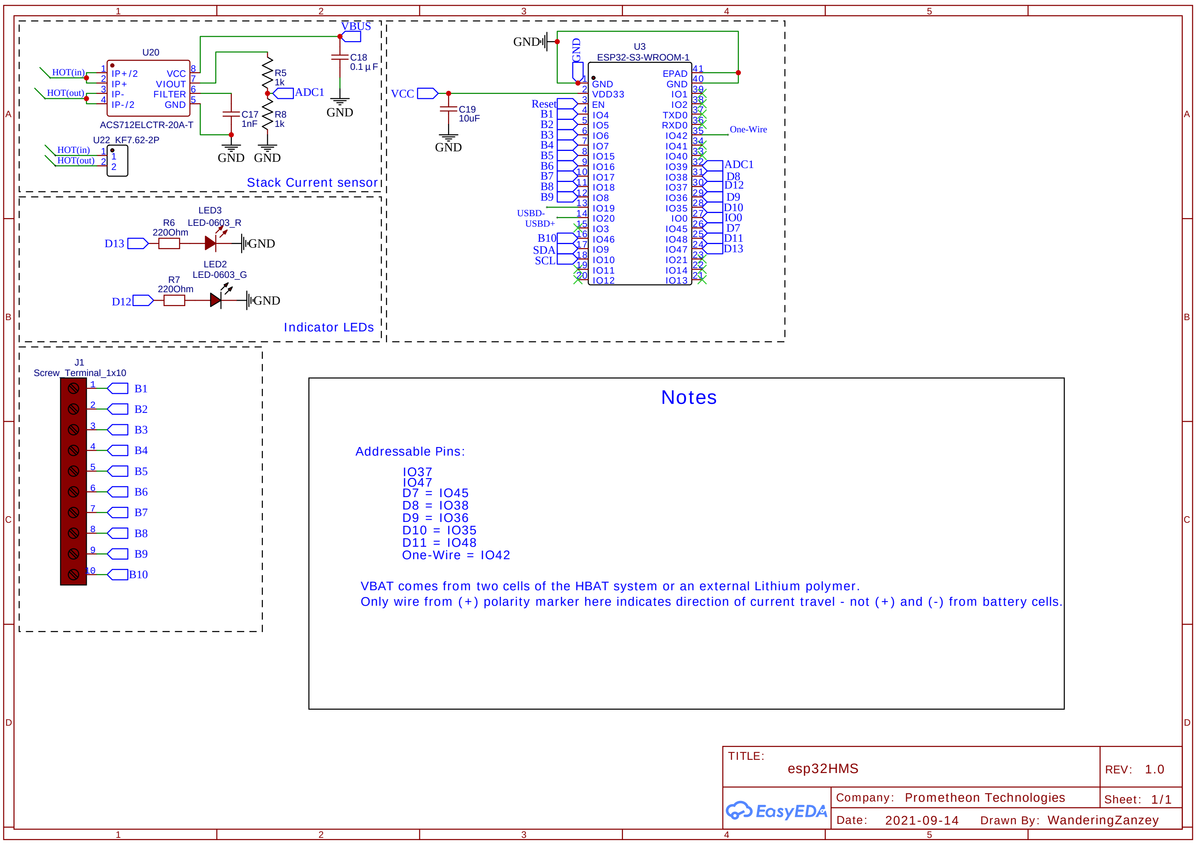

Notes

Addressable Pins:

IO37
IO47
D7 = IO45
D8 = IO38
D9 = IO36
D10 = IO35
D11 = IO48
One-Wire = IO42

VBAT comes from two cells of the HBAT system or an external Lithium polymer.
Only wire from (+) polarity marker here indicates direction of current travel - not (+) and (-) from battery cells.

TITLE: esp32HMS	REV: 1.0
Company: Prometheon Technologies	Sheet: 1/1
Date: 2021-09-14 Drawn By: WanderingZanzey	

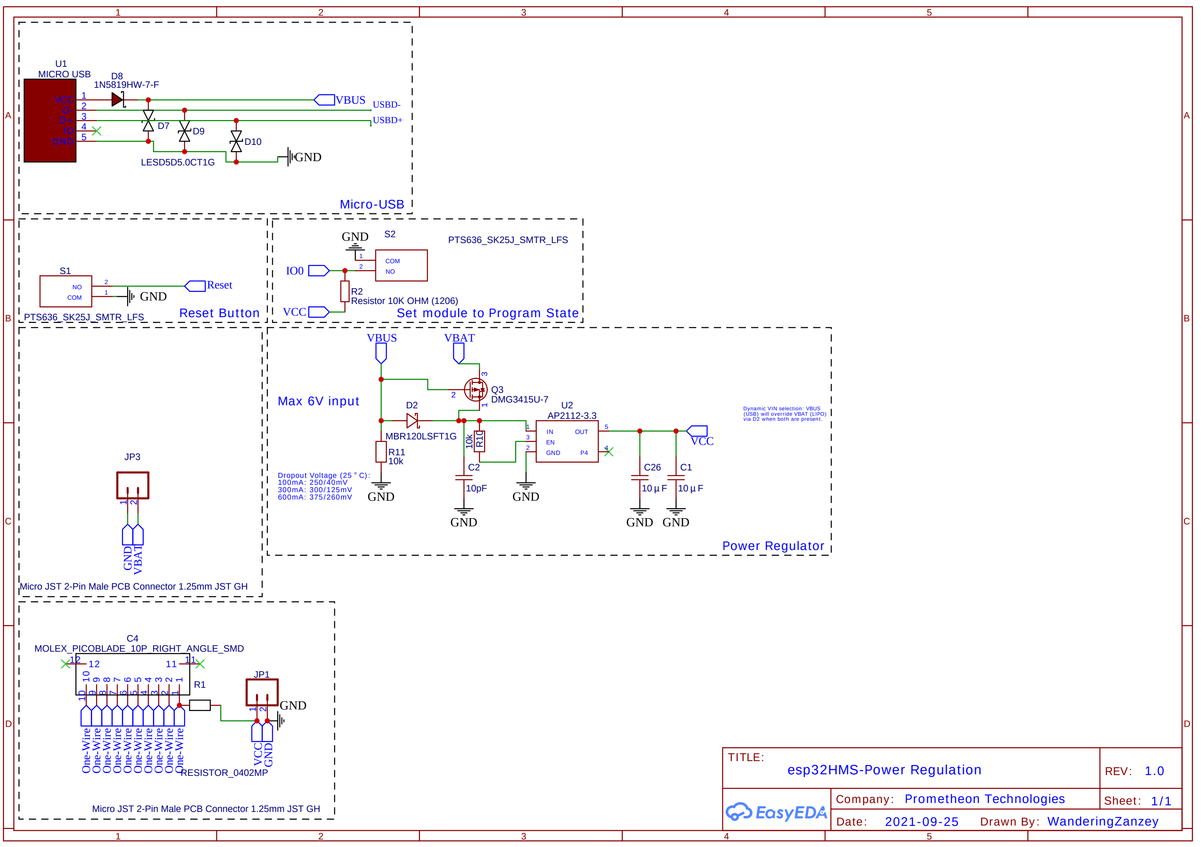

TITLE: esp32HMS-Power Regulation	REV: 1.0
Company: Prometheon Technologies	Sheet: 1/1
Date: 2021-09-25 Drawn By: WanderingZanzey	

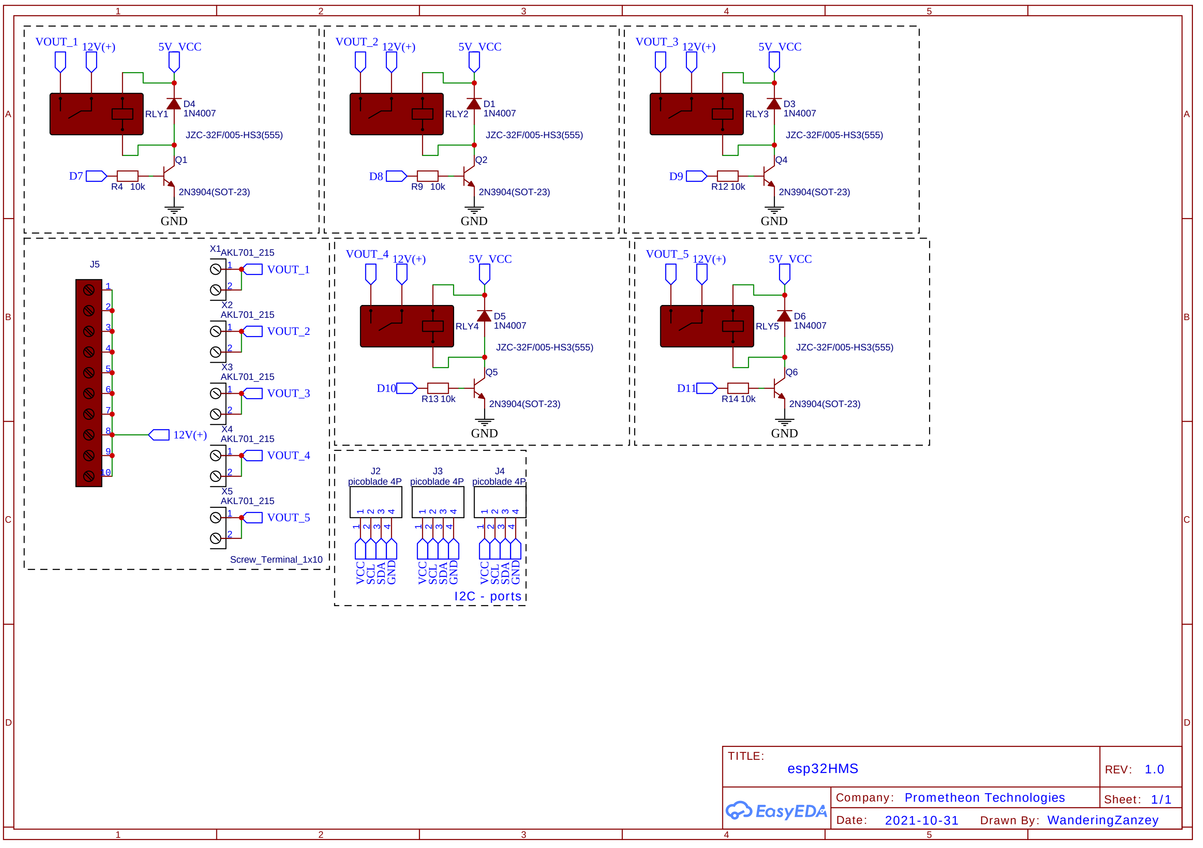

TITLE: esp32HMS	REV: 1.0
Company: Prometheon Technologies	Sheet: 1/1
Date: 2021-10-31 Drawn By: WanderingZanzey	