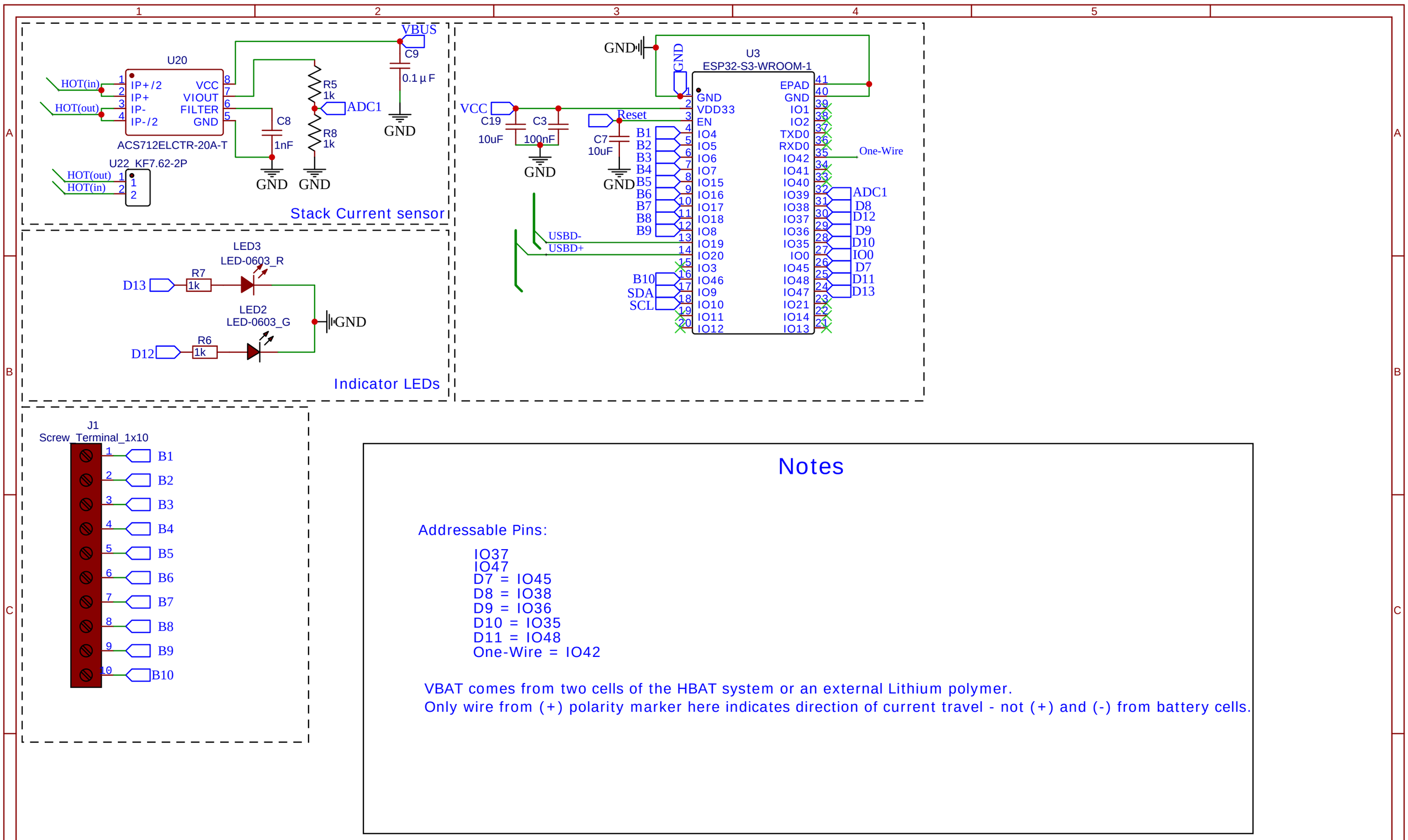
U20
ACS712ELCTR-20A-T
HOT(in)
HOT(out)
IP+/2
IP+
IP-
IP-/2
VCC
VIOUT
FILTER
GND
VBUS
C9
0.1 µ F
R5
1k
ADC1
R8
1k
C8
1nF
U22_KF7.62-2P
Stack Current sensor
LED3
LED-0603_R
D13
R7
1k
LED2
LED-0603_G
D12
R6
1k
Indicator LEDs
U3
ESP32-S3-WROOM-1
VCC
C19
10uF
C3
100nF
Reset
C7
10uF
USBD-
USBD+
One-Wire
ADC1
D8
D12
D9
D10
IO0
D7
D11
D13
SDA
SCL
J1
Screw_Terminal_1x10
B1
B2
B3
B4
B5
B6
B7
B8
B9
B10
Notes
Addressable Pins:
IO37
IO47
D7 = IO45
D8 = IO38
D9 = IO36
D10 = IO35
D11 = IO48
One-Wire = IO42
VBAT comes from two cells of the HBAT system or an external Lithium polymer.
Only wire from (+) polarity marker here indicates direction of current travel - not (+) and (-) from battery cells.
TITLE:
esp32HMS
REV: 1.0
Company: Prometheon Technologies
Sheet: 1/1
Date: 2021-09-14
Drawn By: WanderingZanzey

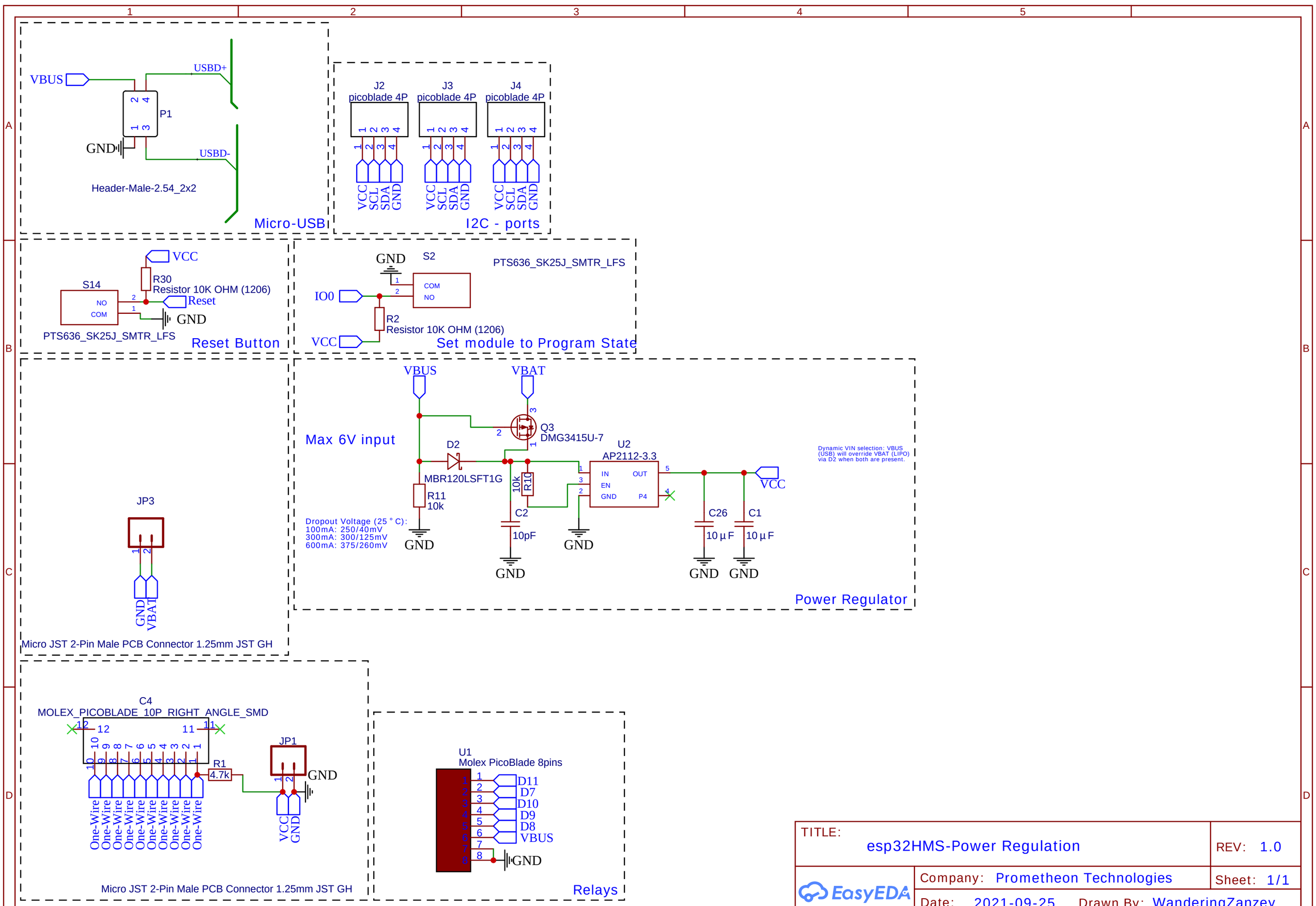
VBUS
USBD+
P1
GND
USBD-
Header-Male-2.54_2x2
Micro-USB
J2
picoblade 4P
J3
picoblade 4P
J4
picoblade 4P
VCC
SCL
SDA
GND
I2C - ports
VCC
R30
Resistor 10K OHM (1206)
S14
NO
COM
Reset
GND
PTS636_SK25J_SMTR_LFS
Reset Button
GND
S2
PTS636_SK25J_SMTR_LFS
IO0
R2
Resistor 10K OHM (1206)
VCC
Set module to Program State
VBUS
VBAT
Q3
DMG3415U-7
Max 6V input
D2
MBR120LSFT1G
R11
10k
10k
R10
C2
10pF
U2
AP2112-3.3
IN
OUT
EN
GND
P4
Dynamic VIN selection: VBUS (USB) will override VBAT (LIPO) via D2 when both are present.
C26
10 µ F
C1
10 µ F
Dropout Voltage (25 ° C):
100mA: 250/40mV
300mA: 300/125mV
600mA: 375/260mV
Power Regulator
JP3
GND
VBAT
Micro JST 2-Pin Male PCB Connector 1.25mm JST GH
C4
MOLEX_PICOBLADE_10P_RIGHT_ANGLE_SMD
One-Wire
R1
4.7k
JP1
VCC
GND
Micro JST 2-Pin Male PCB Connector 1.25mm JST GH
U1
Molex PicoBlade 8pins
D11
D7
D10
D9
D8
VBUS
GND
Relays
TITLE:
esp32HMS-Power Regulation
REV: 1.0
Company: Prometheon Technologies
Sheet: 1/1
Date: 2021-09-25
Drawn By: WanderingZanzey