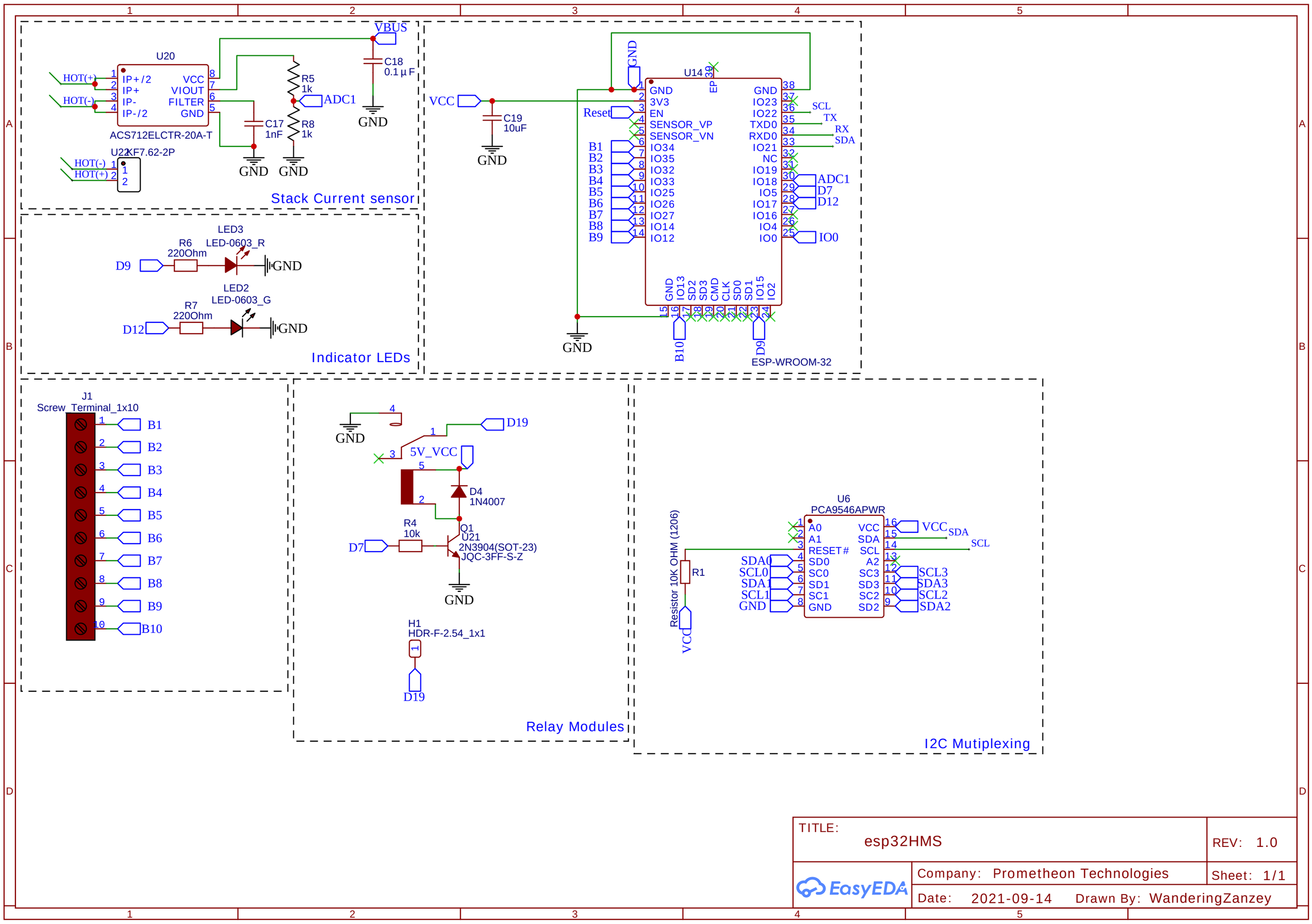

TITLE: esp32HMS	REV: 1.0
Company: Prometheon Technologies	Sheet: 1/1
Date: 2021-09-14 Drawn By: WanderingZanzey	

Only wire from (+) polarity marker here indicates direction of current travel - not (+) and (-) from battery cells.

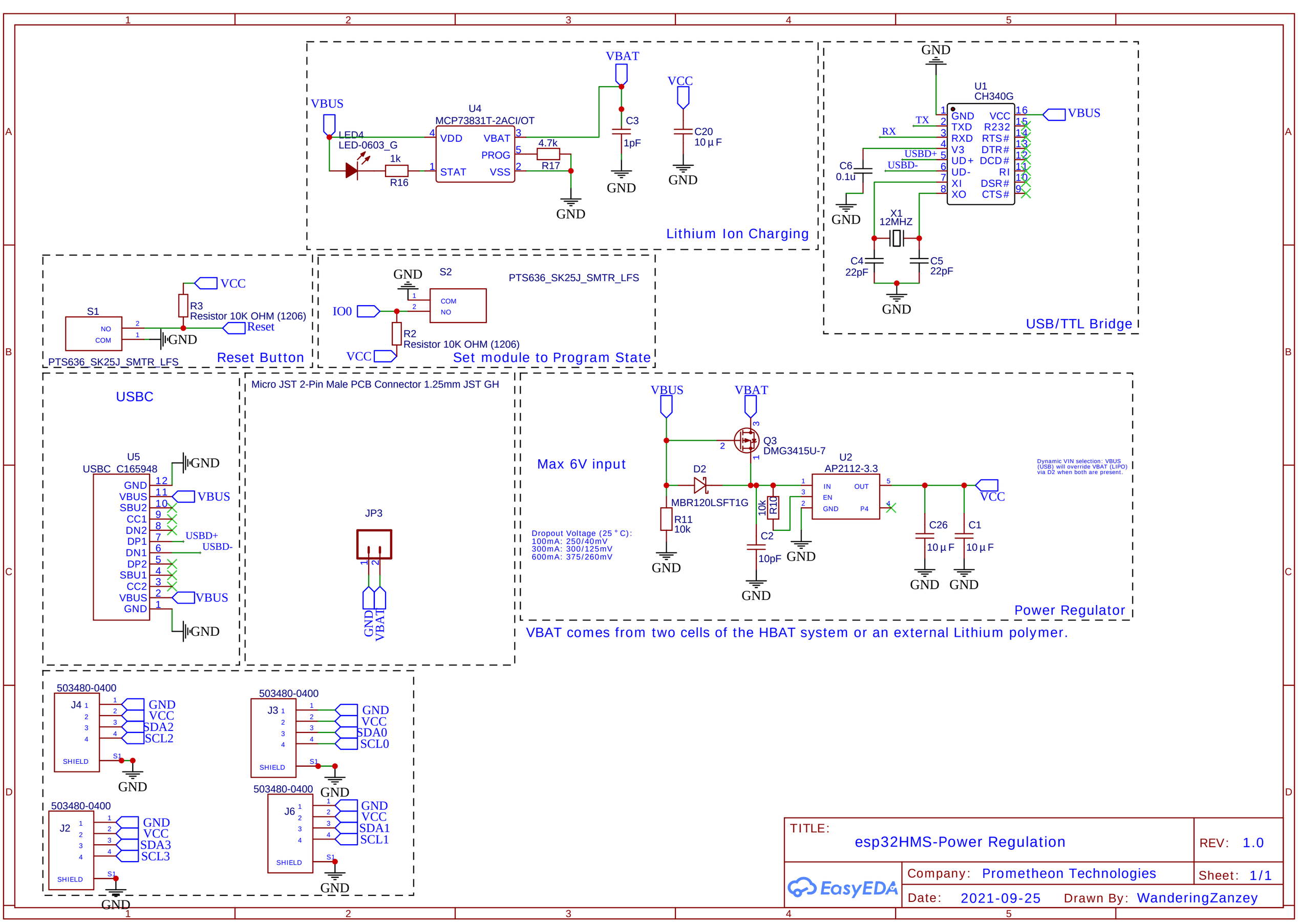

TITLE: esp32HMS-Power Regulation	REV: 1.0
Company: Prometheon Technologies	Sheet: 1/1
Date: 2021-09-25 Drawn By: WanderingZanzey	