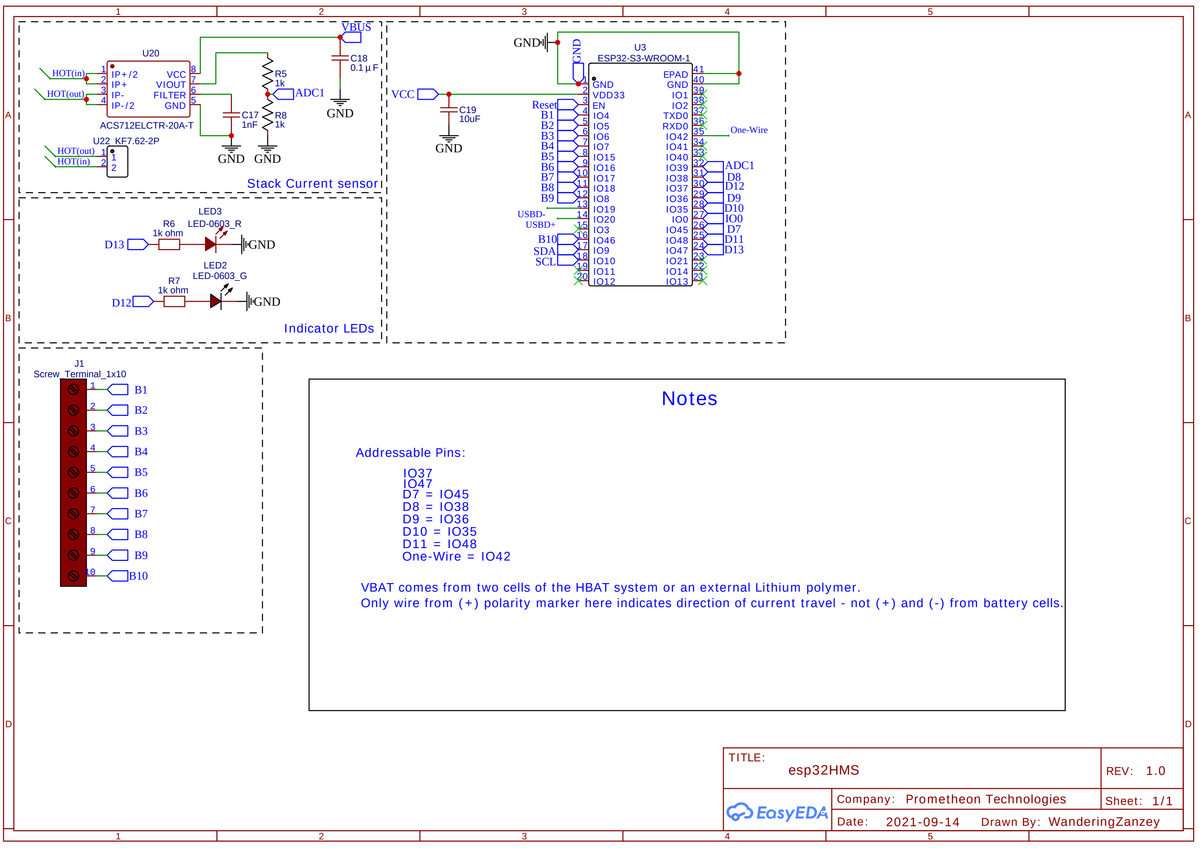
Stack Current sensor
U20
ACS712ELCTR-20A-T
U22_KF7.62-2P
HOT(in)
HOT(out)
VBUS
ADC1
R5 1k
R8 1k
C17 1nF
C18 0.1µF
GND
U3
ESP32-S3-WROOM-1
VCC
C19 10uF
Reset
USBD-
USBD+
SDA
SCL
One-Wire
ADC1
D8
D12
D9
D10
IO0
D7
D11
D13
Indicator LEDs
LED3
LED-0603_R
R6 1k ohm
D13
LED2
LED-0603_G
R7 1k ohm
D12
J1
Screw_Terminal_1x10
B1
B2
B3
B4
B5
B6
B7
B8
B9
B10
Notes
Addressable Pins:
IO37
IO47
D7 = IO45
D8 = IO38
D9 = IO36
D10 = IO35
D11 = IO48
One-Wire = IO42
VBAT comes from two cells of the HBAT system or an external Lithium polymer.
Only wire from (+) polarity marker here indicates direction of current travel - not (+) and (-) from battery cells.
TITLE:
esp32HMS
REV: 1.0
Company: Prometheon Technologies
Sheet: 1/1
Date: 2021-09-14
Drawn By: WanderingZanzey

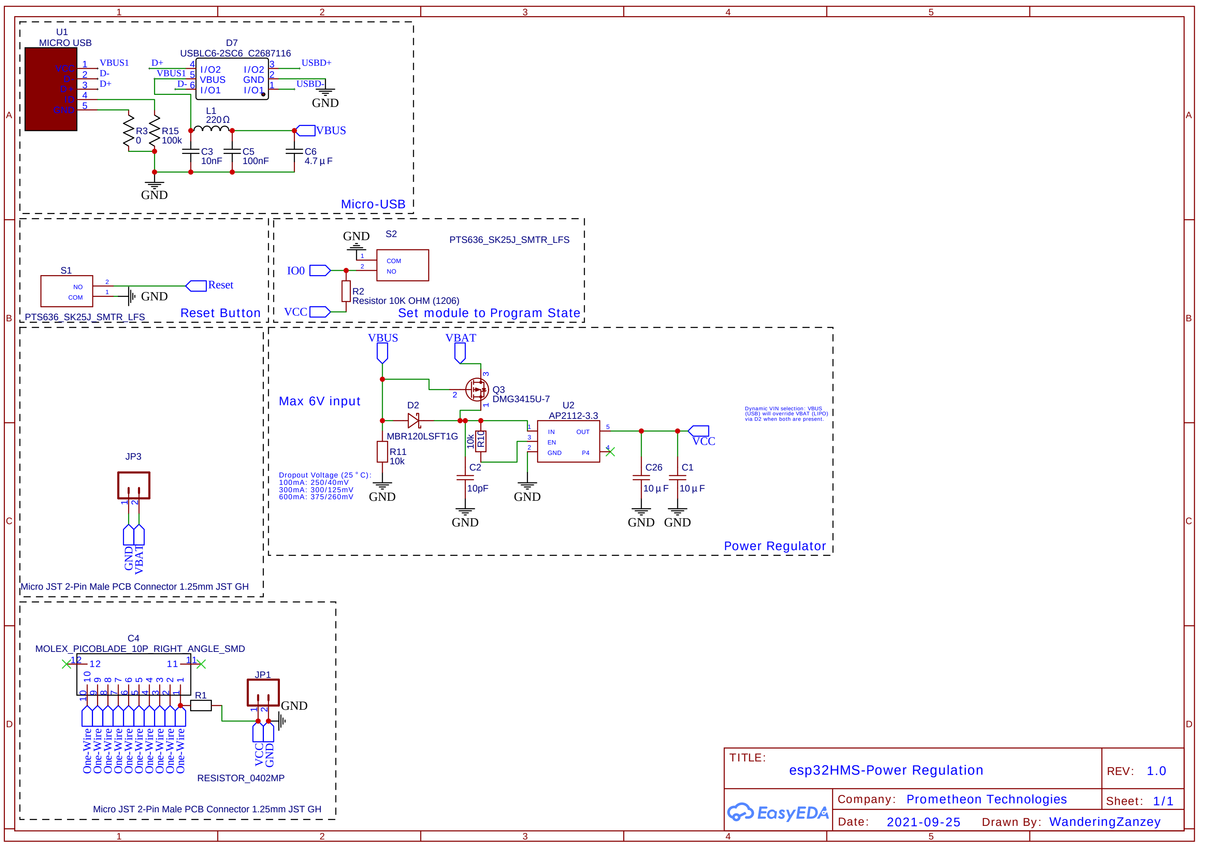
Micro-USB
U1
MICRO USB
D7
USBLC6-2SC6 C2687116
R3 0
R15 100k
L1 220Ω
C3 10nF
C5 100nF
C6 4.7µF
VBUS
GND
Reset Button
S1
PTS636_SK25J_SMTR_LFS
Reset
Set module to Program State
S2
PTS636_SK25J_SMTR_LFS
IO0
R2 Resistor 10K OHM (1206)
VCC
Max 6V input
Q3 DMG3415U-7
D2 MBR120LSFT1G
R11 10k
C2 10pF
U2 AP2112-3.3
C26 10µF
C1 10µF
Dropout Voltage (25 °C):
100mA: 250/40mV
300mA: 300/125mV
600mA: 375/260mV
Power Regulator
JP3
Micro JST 2-Pin Male PCB Connector 1.25mm JST GH
C4
MOLEX_PICOBLADE_10P_RIGHT_ANGLE_SMD
R1
RESISTOR_0402MP
JP1
Micro JST 2-Pin Male PCB Connector 1.25mm JST GH
TITLE:
esp32HMS-Power Regulation
REV: 1.0
Company: Prometheon Technologies
Sheet: 1/1
Date: 2021-09-25
Drawn By: WanderingZanzey

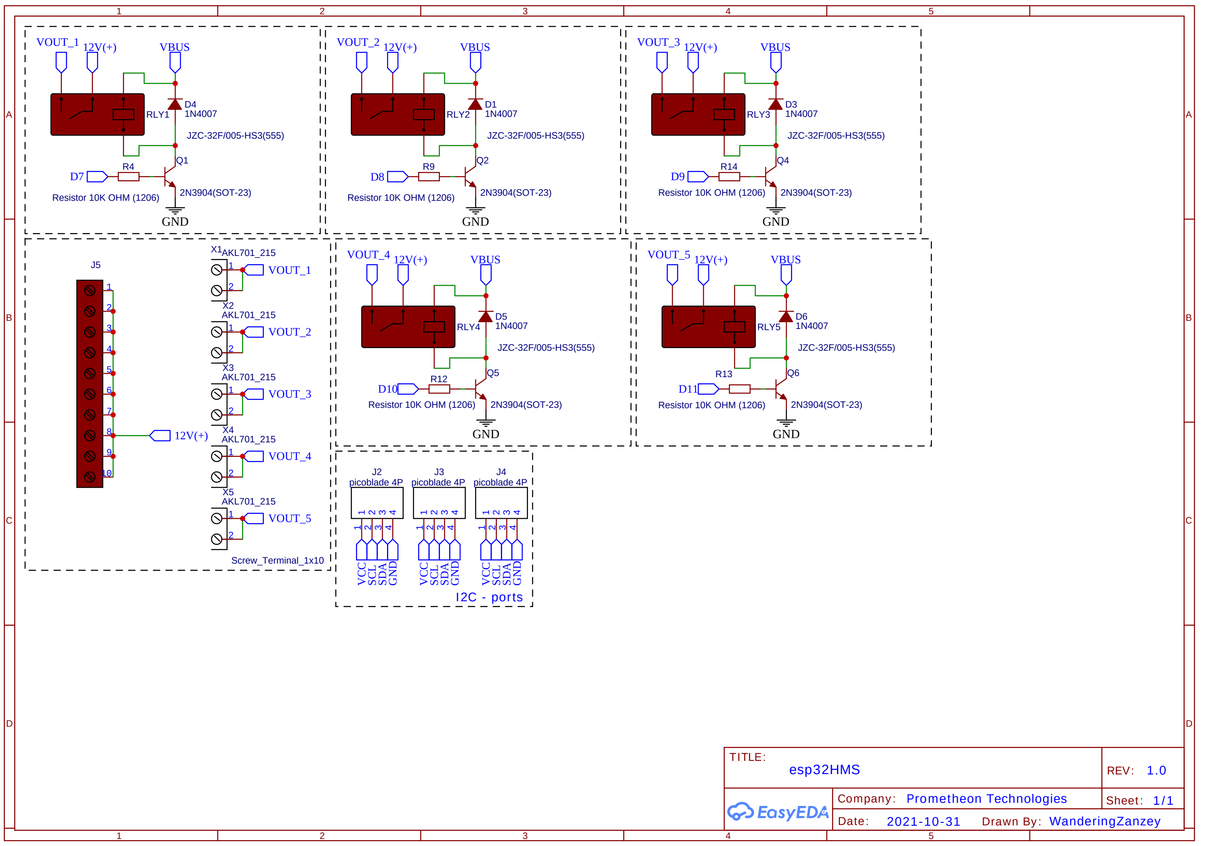
VOUT_1
12V(+)
VBUS
RLY1
D4 1N4007
JZC-32F/005-HS3(555)
Q1
D7
R4
Resistor 10K OHM (1206)
2N3904(SOT-23)
GND
VOUT_2
RLY2
D1 1N4007
Q2
D8
R9
VOUT_3
RLY3
D3 1N4007
Q4
D9
R14
J5
Screw_Terminal_1x10
X1 AKL701_215
X2 AKL701_215
X3 AKL701_215
X4 AKL701_215
X5 AKL701_215
VOUT_4
RLY4
D5 1N4007
Q5
D10
R12
VOUT_5
RLY5
D6 1N4007
Q6
D11
R13
J2 picoblade 4P
J3 picoblade 4P
J4 picoblade 4P
VCC
SCL
SDA
GND
I2C - ports
TITLE:
esp32HMS
REV: 1.0
Company: Prometheon Technologies
Sheet: 1/1
Date: 2021-10-31
Drawn By: WanderingZanzey