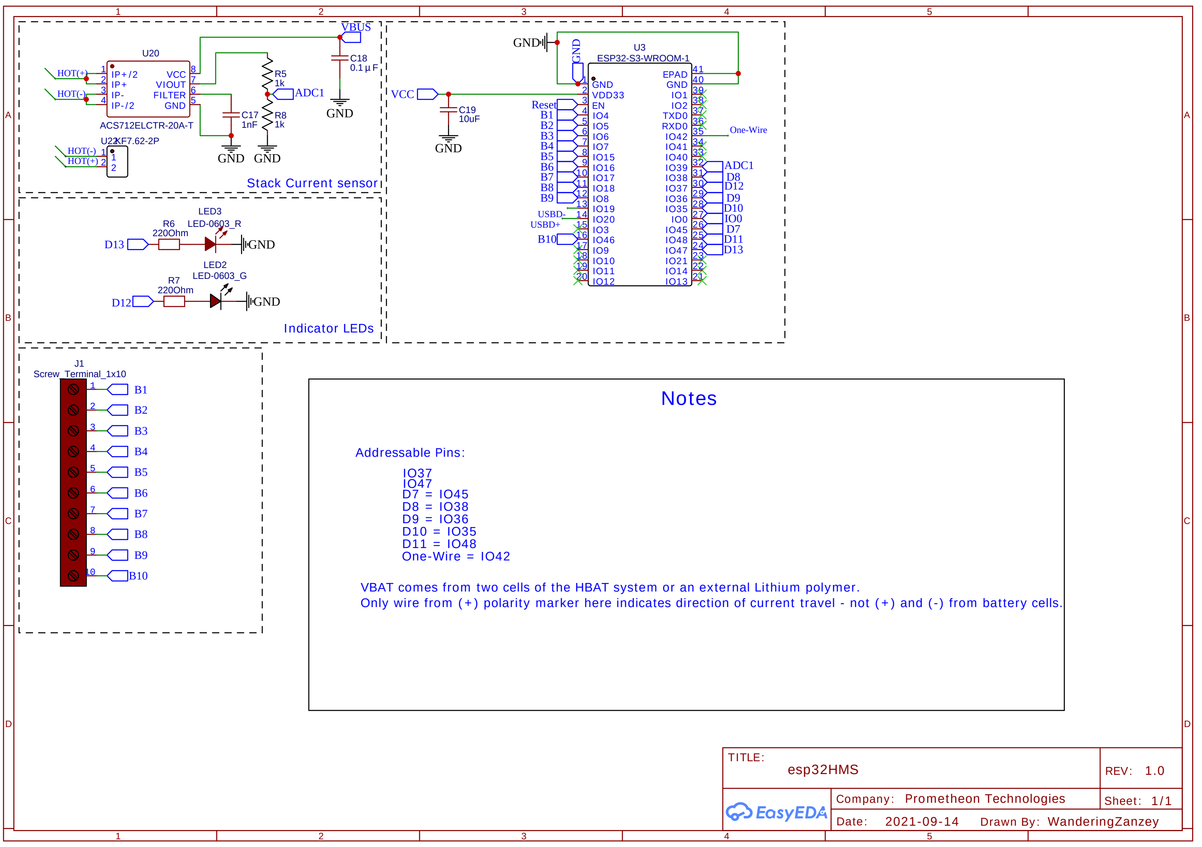
Stack Current sensor
U20
ACS712ELCTR-20A-T
U22KF7.62-2P
HOT(+)
HOT(-)
VBUS
ADC1
GND
VCC
R5 1k
R8 1k
C17 1nF
C18 0.1µF
U3
ESP32-S3-WROOM-1
C19 10uF
One-Wire
Indicator LEDs
LED3 LED-0603_R
LED2 LED-0603_G
R6 220Ohm
R7 220Ohm
D13
D12
J1
Screw_Terminal_1x10
B1
B2
B3
B4
B5
B6
B7
B8
B9
B10
Notes
Addressable Pins:
IO37
IO47
D7 = IO45
D8 = IO38
D9 = IO36
D10 = IO35
D11 = IO48
One-Wire = IO42
VBAT comes from two cells of the HBAT system or an external Lithium polymer.
Only wire from (+) polarity marker here indicates direction of current travel - not (+) and (-) from battery cells.
TITLE:
esp32HMS
REV: 1.0
Company: Prometheon Technologies
Sheet: 1/1
Date: 2021-09-14
Drawn By: WanderingZanzey

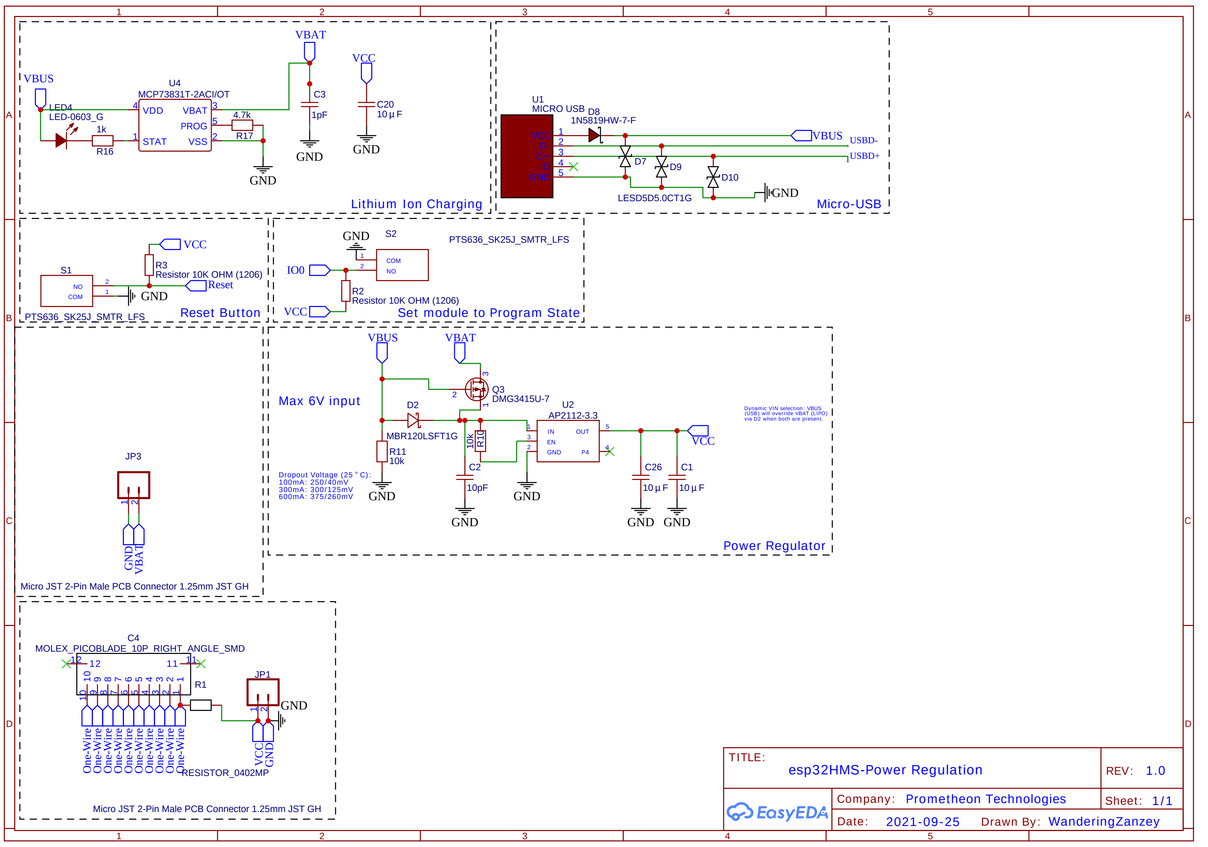
Lithium Ion Charging
U4
MCP73831T-2ACI/OT
LED4 LED-0603_G
R16 1k
R17 4.7k
C3 1pF
C20 10µF
VBUS
VBAT
VCC
GND
Micro-USB
U1
MICRO USB
D8 1N5819HW-7-F
D7
D9
D10
LESD5D5.0CT1G
USBD-
USBD+
Reset Button
S1
PTS636_SK25J_SMTR_LFS
R3 Resistor 10K OHM (1206)
Reset
Set module to Program State
S2
IO0
R2 Resistor 10K OHM (1206)
JP3
Micro JST 2-Pin Male PCB Connector 1.25mm JST GH
Max 6V input
Q3 DMG3415U-7
D2 MBR120LSFT1G
R11 10k
R10 10k
C2 10pF
U2 AP2112-3.3
C26 10µF
C1 10µF
Dropout Voltage (25 °C):
100mA: 250/40mV
300mA: 300/125mV
600mA: 375/260mV
Dynamic VIN selection: VBUS (USB) will override VBAT (LiPo) via D2 when both are present.
Power Regulator
C4
MOLEX_PICOBLADE_10P_RIGHT_ANGLE_SMD
R1 RESISTOR_0402MP
JP1
One-Wire
Micro JST 2-Pin Male PCB Connector 1.25mm JST GH
TITLE:
esp32HMS-Power Regulation
REV: 1.0
Company: Prometheon Technologies
Sheet: 1/1
Date: 2021-09-25
Drawn By: WanderingZanzey

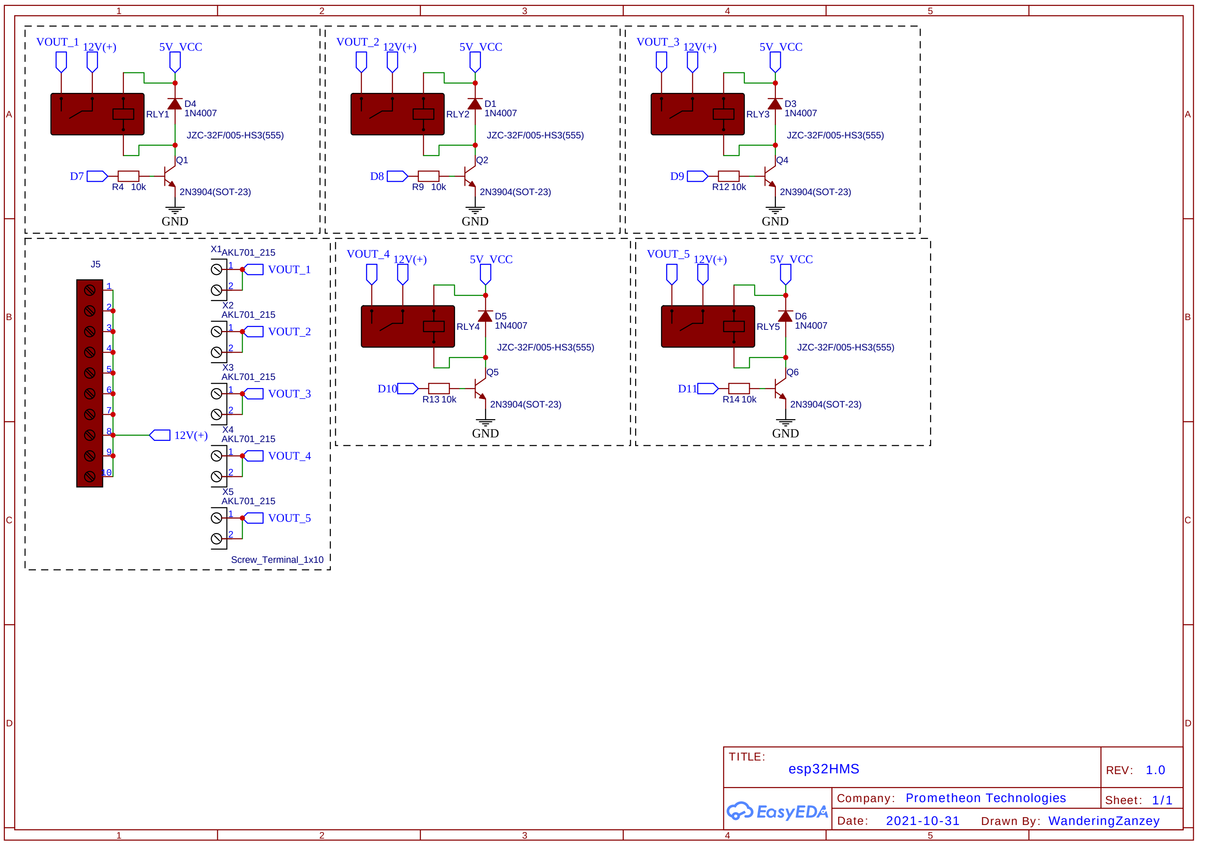
VOUT_1
VOUT_2
VOUT_3
VOUT_4
VOUT_5
12V(+)
5V_VCC
RLY1
RLY2
RLY3
RLY4
RLY5
D4 1N4007
D1 1N4007
D3 1N4007
D5 1N4007
D6 1N4007
JZC-32F/005-HS3(555)
Q1
Q2
Q4
Q5
Q6
2N3904(SOT-23)
D7
D8
D9
D10
D11
R4 10k
R9 10k
R12 10k
R13 10k
R14 10k
GND
J5
Screw_Terminal_1x10
X1 AKL701_215
X2 AKL701_215
X3 AKL701_215
X4 AKL701_215
X5 AKL701_215
TITLE:
esp32HMS
REV: 1.0
Company: Prometheon Technologies
Sheet: 1/1
Date: 2021-10-31
Drawn By: WanderingZanzey