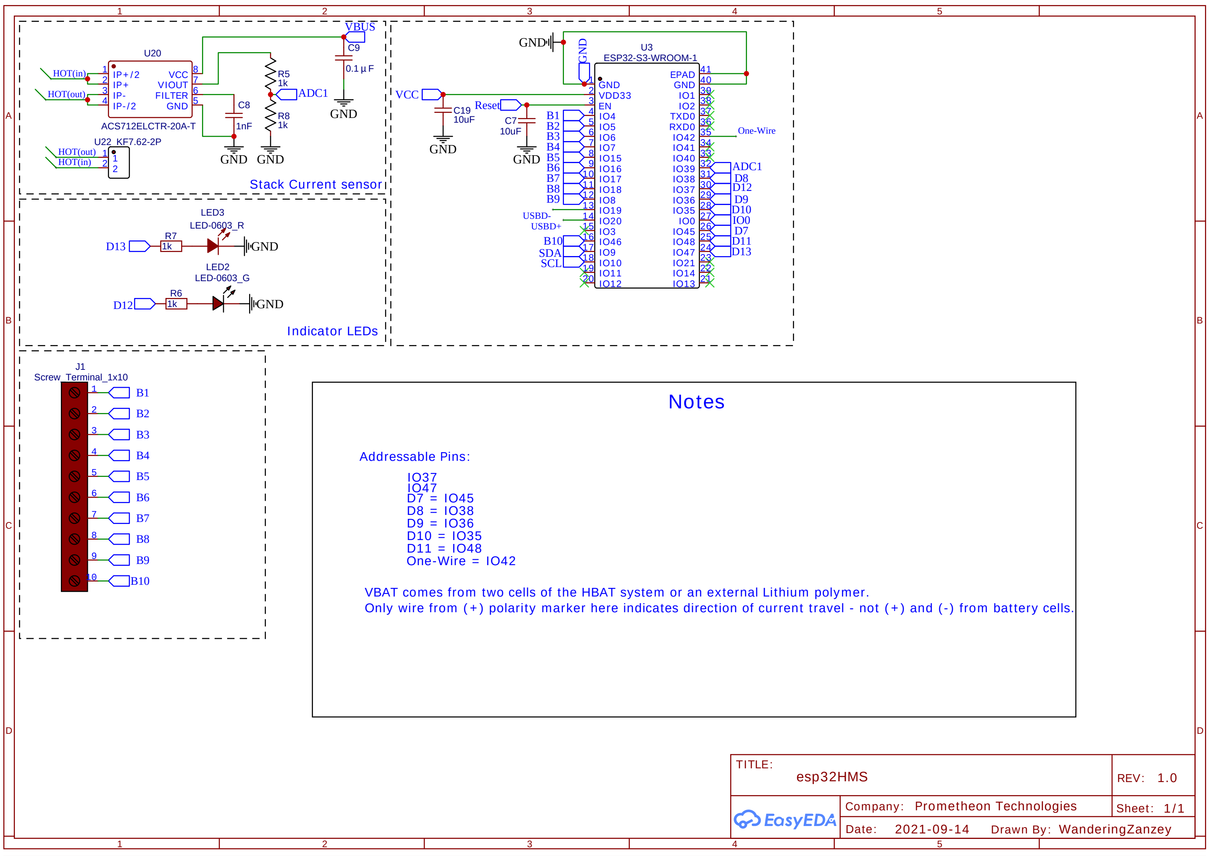

Notes

Addressable Pins:

- IO37
- IO47
- D7 = IO45
- D8 = IO38
- D9 = IO36
- D10 = IO35
- D11 = IO48
- One-Wire = IO42

VBAT comes from two cells of the HBAT system or an external Lithium polymer.
Only wire from (+) polarity marker here indicates direction of current travel - not (+) and (-) from battery cells.

TITLE: esp32HMS		REV: 1.0
EasyEDA	Company: Prometheon Technologies	Sheet: 1/1
	Date: 2021-09-14 Drawn By: WanderingZanzey	

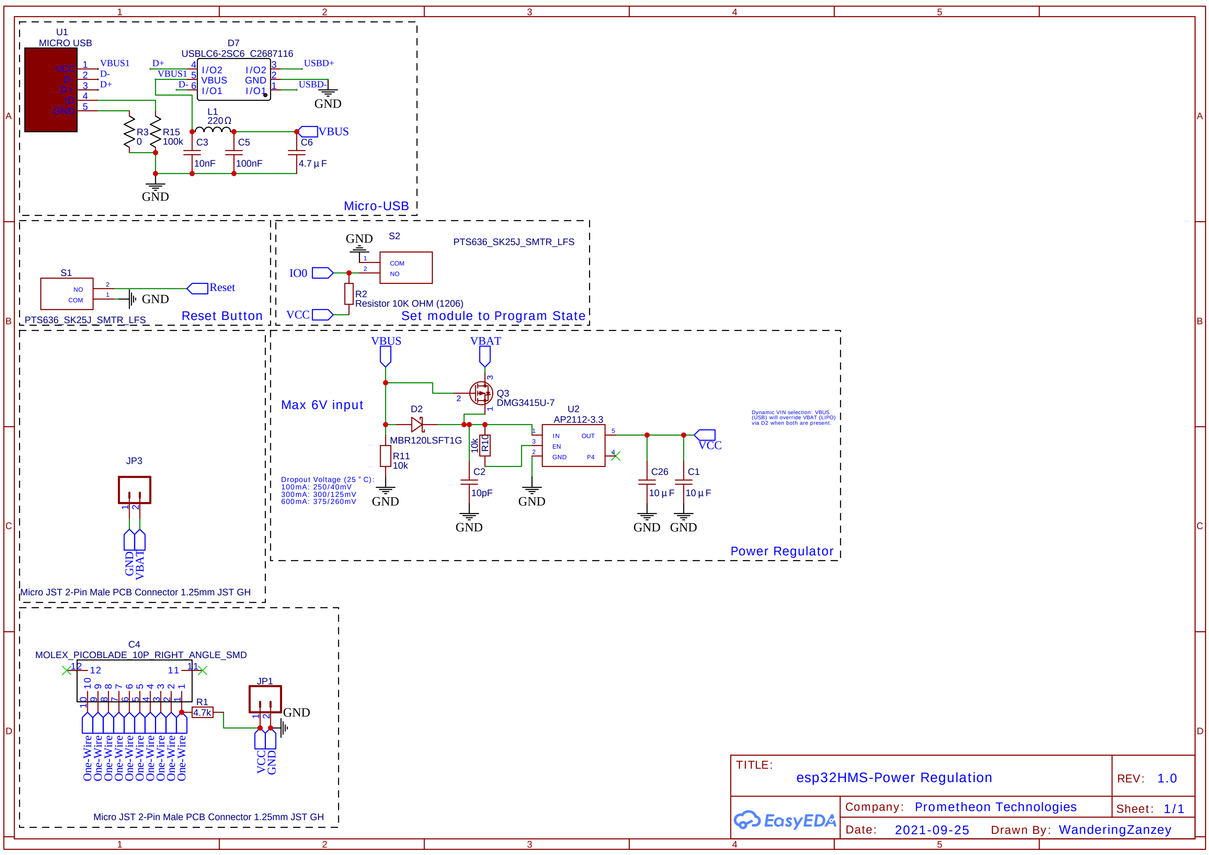

TITLE: esp32HMS-Power Regulation		REV: 1.0
EasyEDA	Company: Prometheon Technologies	Sheet: 1/1
	Date: 2021-09-25 Drawn By: WanderingZanzey	

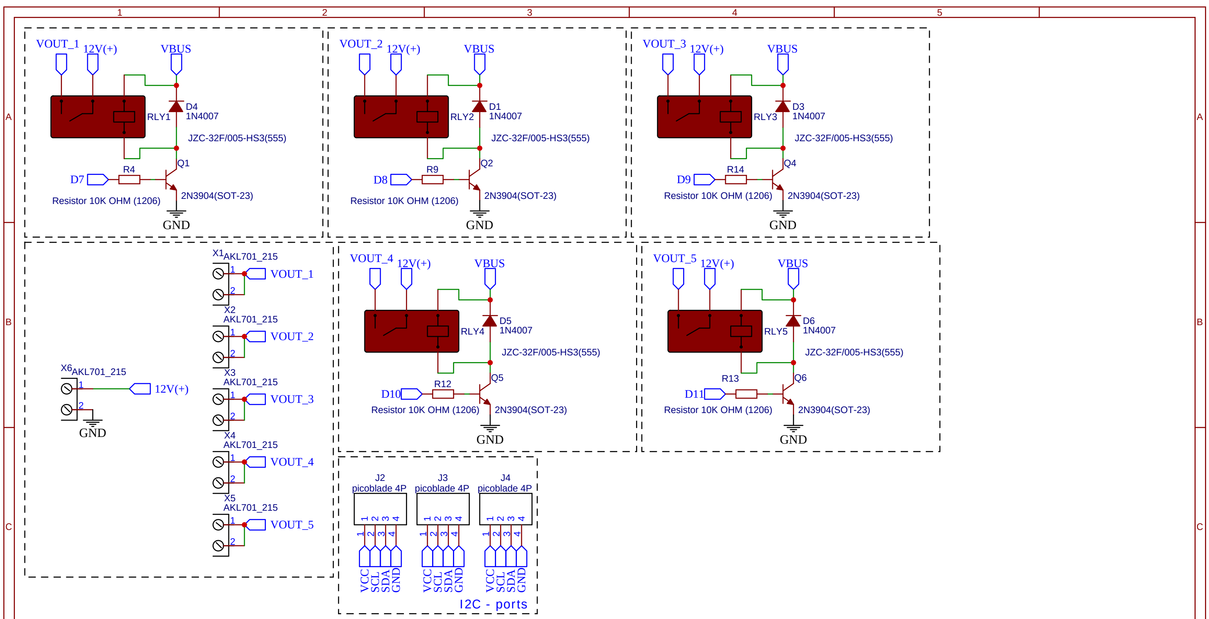

TITLE: esp32HMS		REV: 1.0
EasyEDA	Company: Prometheon Technologies	Sheet: 1/1
	Date: 2021-10-31 Drawn By: WanderingZanzey	