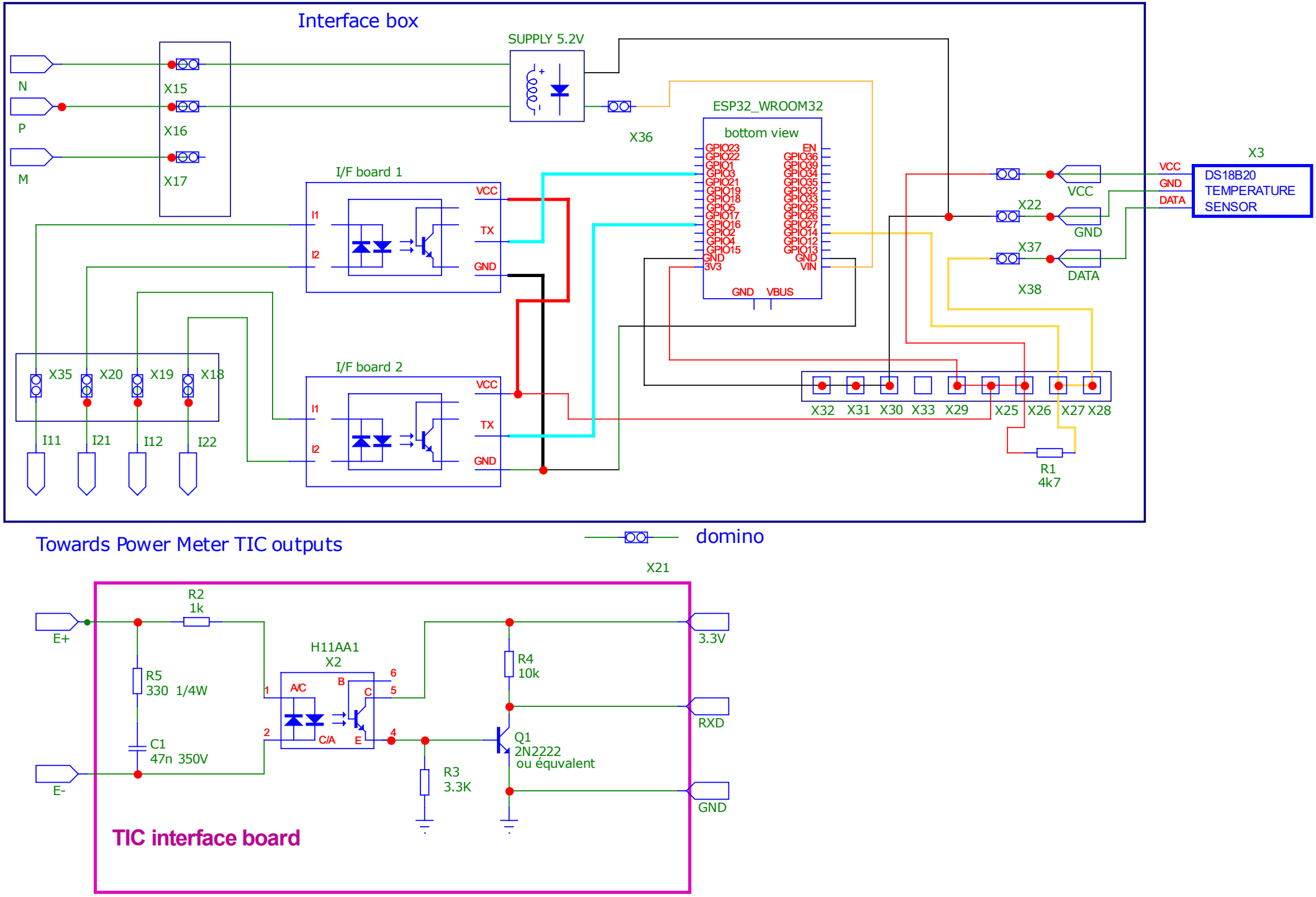
Interface box
SUPPLY 5.2V
N
P
M
X15
X16
X17
X36
ESP32_WROOM32
bottom view
GPIO23
GPIO22
GPIO1
GPIO3
GPIO21
GPIO19
GPIO18
GPIO5
GPIO17
GPIO16
GPIO2
GPIO4
GPIO15
GND
3V3
EN
GPIO36
GPIO39
GPIO34
GPIO35
GPIO32
GPIO33
GPIO25
GPIO26
GPIO27
GPIO14
GPIO12
GPIO13
GND
VIN
GND
VBUS
I/F board 1
I/F board 2
I1
I2
VCC
TX
GND
X35
X20
X19
X18
I11
I21
I12
I22
X32
X31
X30
X33
X29
X25
X26
X27
X28
R1
4k7
X22
X37
X38
VCC
GND
DATA
X3
DS18B20
TEMPERATURE
SENSOR
Towards Power Meter TIC outputs
domino
X21
E+
E-
R2
1k
R5
330 1/4W
C1
47n 350V
H11AA1
X2
A/C
C/A
B
C
E
1
2
4
5
6
R3
3.3K
R4
10k
Q1
2N2222
ou équvalent
3.3V
RXD
GND
TIC interface board