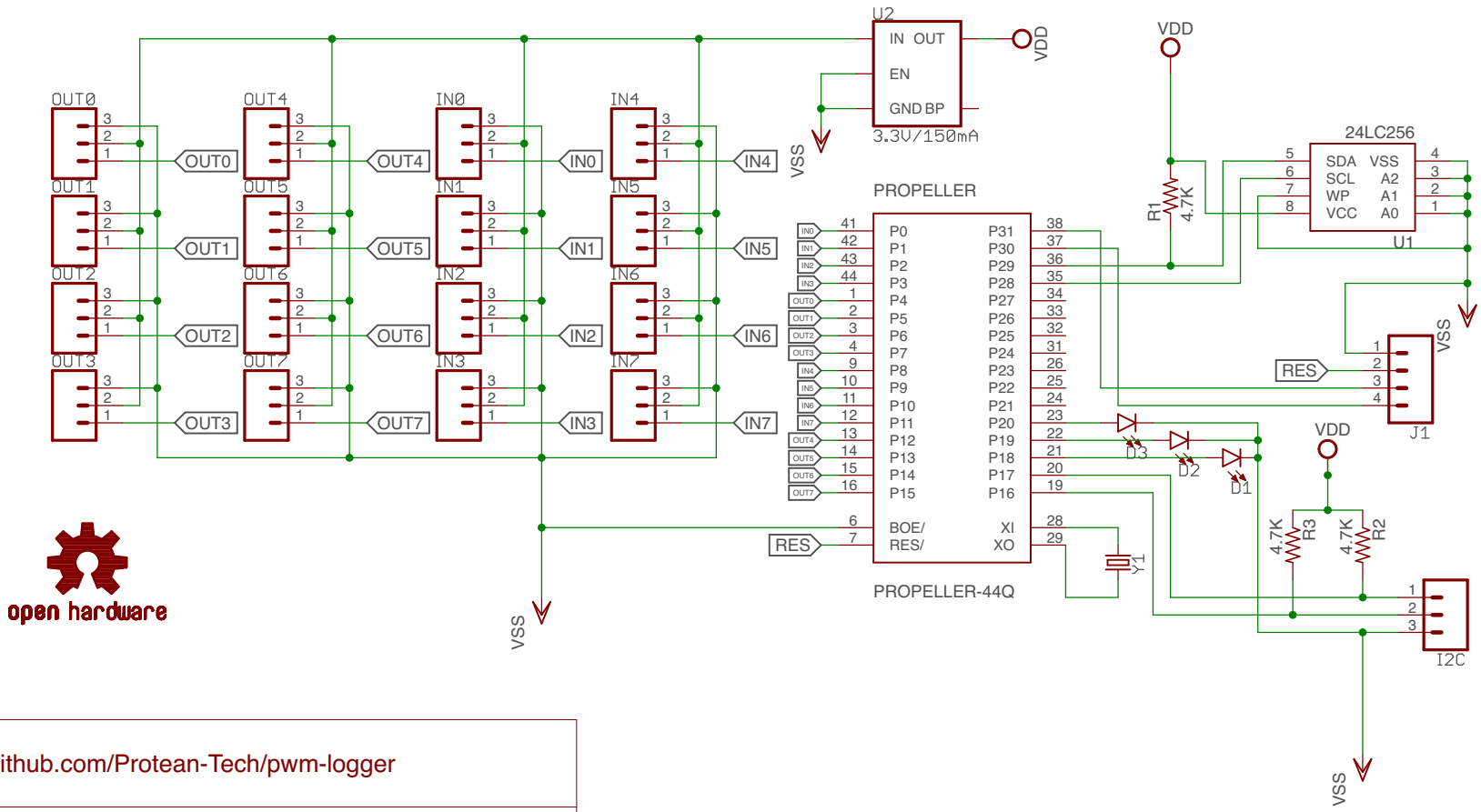

https://github.com/Protean-Tech/pwm-logger

TITLE: pwm-logger	
Document Number:	REV: 0
Date: 7/10/17 11:18 AM	Sheet: 1/1