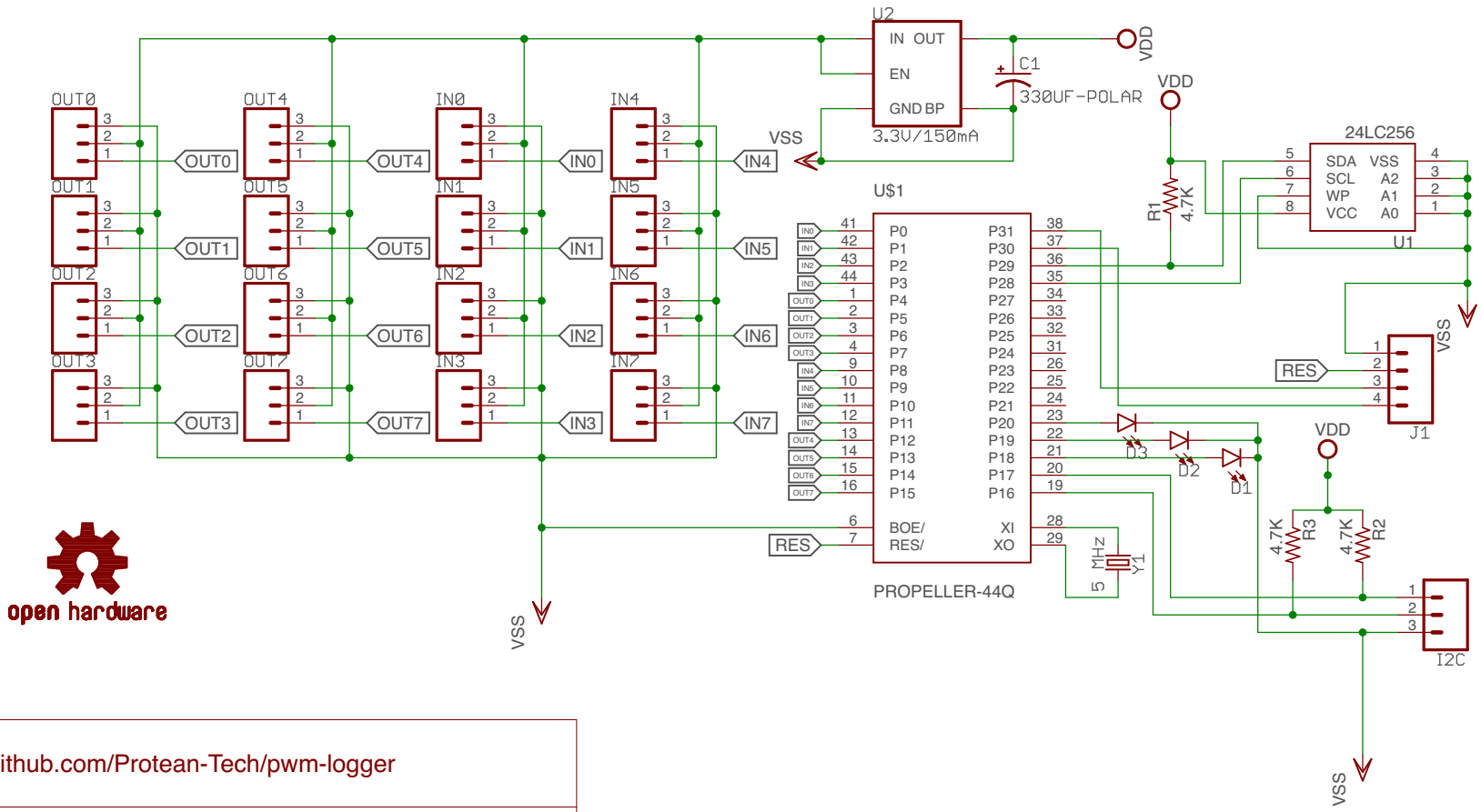

https://github.com/Protean-Tech/pwm-logger

TITLE: pwm-logger	
Document Number:	REV: 0.0.1
Date: 7/21/17 9:41 AM	Sheet: 1/1