Microcontroller

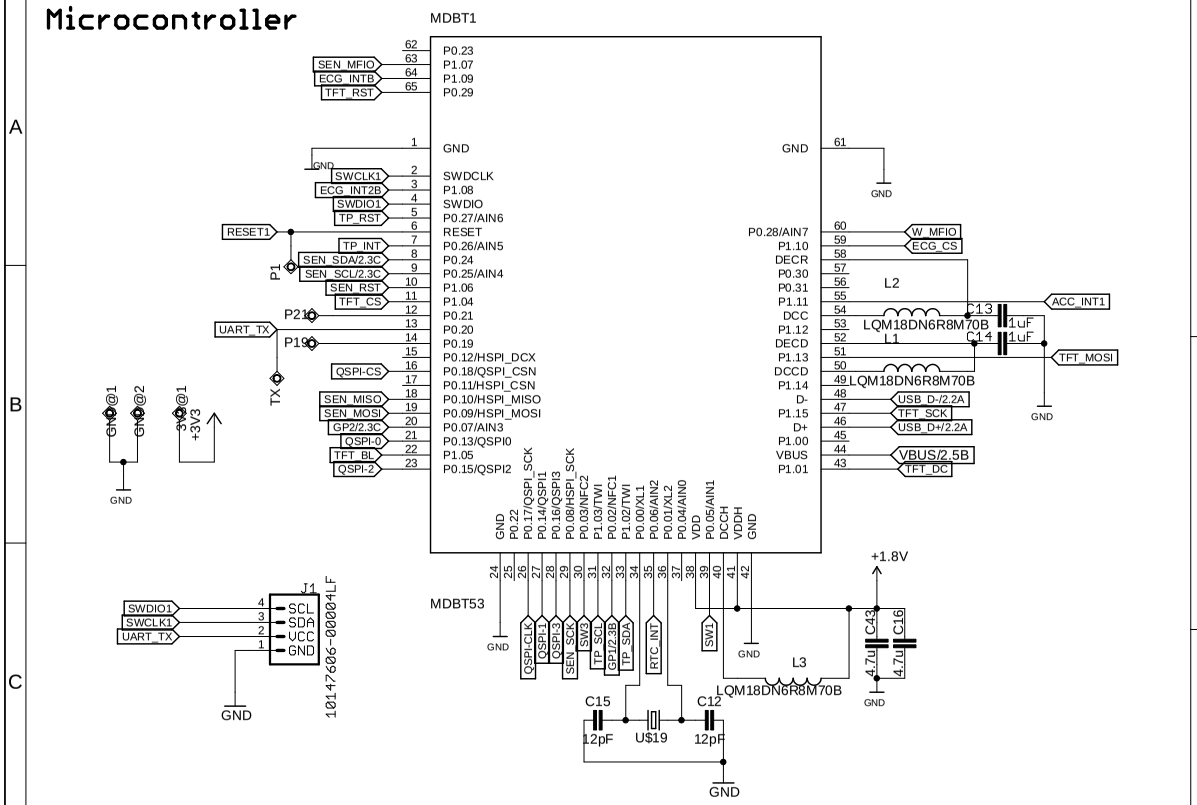

Sensors

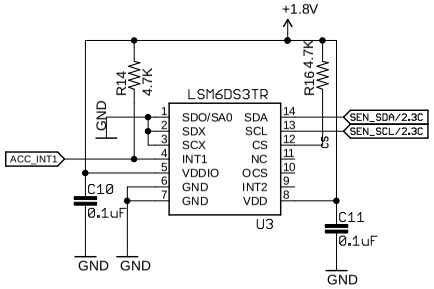

Sensor Connector

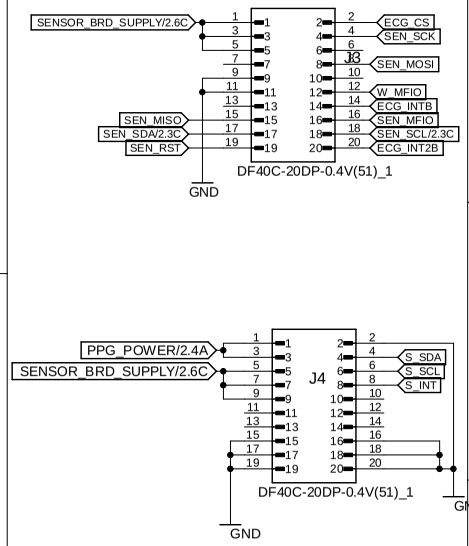

Switch

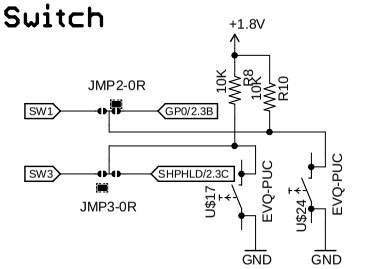

16MB / 128mbit Flash

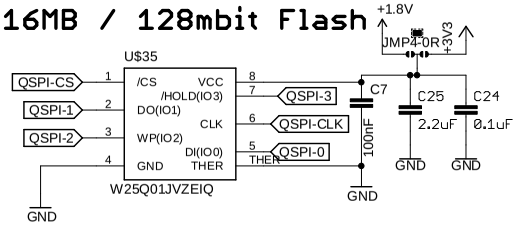

Switch

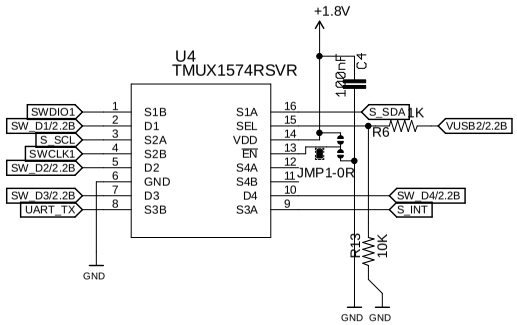

RTC

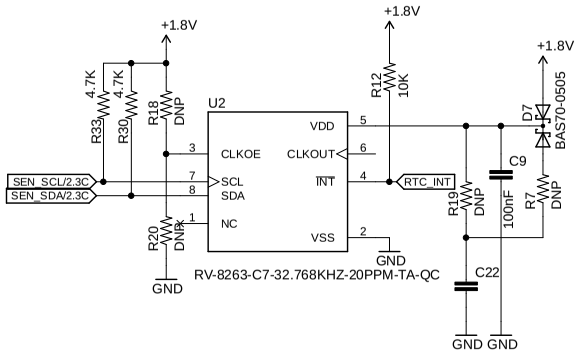

Display Connector

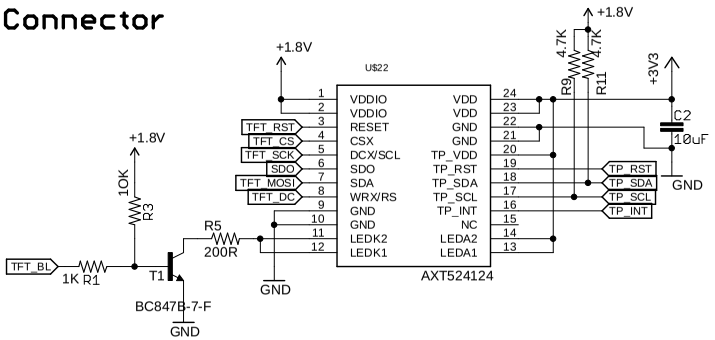

healthypi_move	
nRF5340	
22-05-2024 17:39	
Sheet: 1/2	v4

PROTOCENTRAL

OSHW

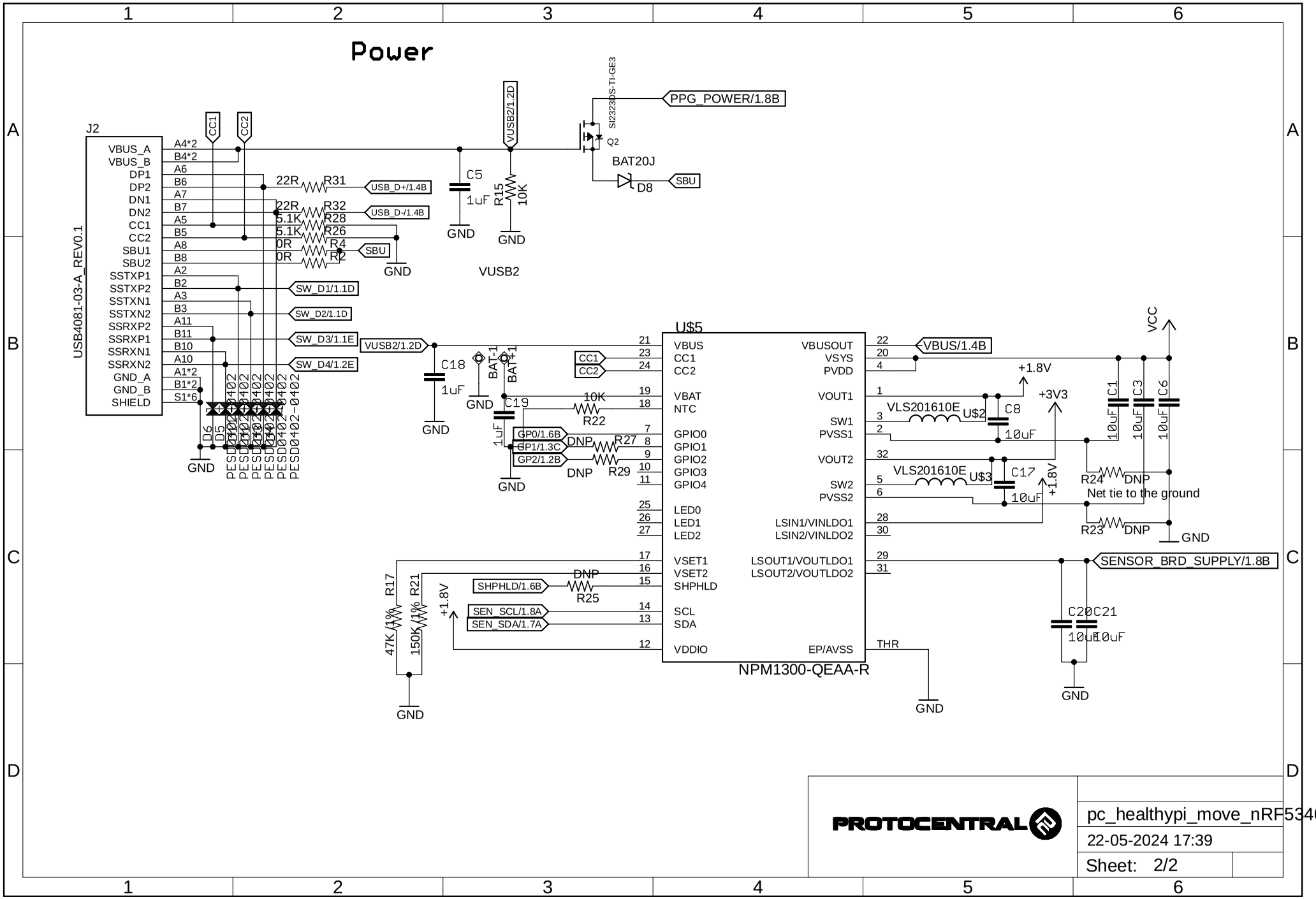
Power
J2
USB4081-03-A_REV0.1
VBUS_A
VBUS_B
DP1
DP2
DN1
DN2
CC1
CC2
SBU1
SBU2
SSTXP1
SSTXP2
SSTXN1
SSTXN2
SSRXP2
SSRXP1
SSRXN1
SSRXN2
GND_A
GND_B
SHIELD
A4*2
B4*2
A6
B6
A7
B7
A5
B5
A8
B8
A2
B2
A3
B3
A11
B11
B10
A10
A1*2
B1*2
S1*6
22R R31
22R R32
5.1K R28
5.1K R26
0R R4
0R R2
USB_D+/1.4B
USB_D-/1.4B
SBU
SW_D1/1.1D
SW_D2/1.1D
SW_D3/1.1E
SW_D4/1.2E
D6 D5
PESD0402-0402
GND
C5 1uF
R15 10K
VUSB2/1.2D
VUSB2
Si2323DS-TI-GE3
Q2
PPG_POWER/1.8B
BAT20J
D8
C18 1uF
BAT-1
C19 1uF
U$5
NPM1300-QEAA-R
VBUS
CC1
CC2
VBAT
NTC
GPIO0
GPIO1
GPIO2
GPIO3
GPIO4
LED0
LED1
LED2
VSET1
VSET2
SHPHLD
SCL
SDA
VDDIO
VBUSOUT
VSYS
PVDD
VOUT1
SW1
PVSS1
VOUT2
SW2
PVSS2
LSIN1/VINLDO1
LSIN2/VINLDO2
LSOUT1/VOUTLDO1
LSOUT2/VOUTLDO2
EP/AVSS
THR
GP0/1.6B
GP1/1.3C
GP2/1.2B
10K R22
DNP R27
DNP R29
SHPHLD/1.6B
DNP R25
SEN_SCL/1.8A
SEN_SDA/1.7A
R17 47K /1%
R21 150K /1%
+1.8V
VBUS/1.4B
VLS201610E U$2
VLS201610E U$3
C8 10uF
C17 10uF
+3V3
VCC
C1 10uF
C3 10uF
C6 10uF
R24 DNP
R23 DNP
Net tie to the ground
SENSOR_BRD_SUPPLY/1.8B
C20 10uF
C21 10uF
PROTOCENTRAL
pc_healthypi_move_nRF5340_v4
22-05-2024 17:39
Sheet: 2/2