Headers

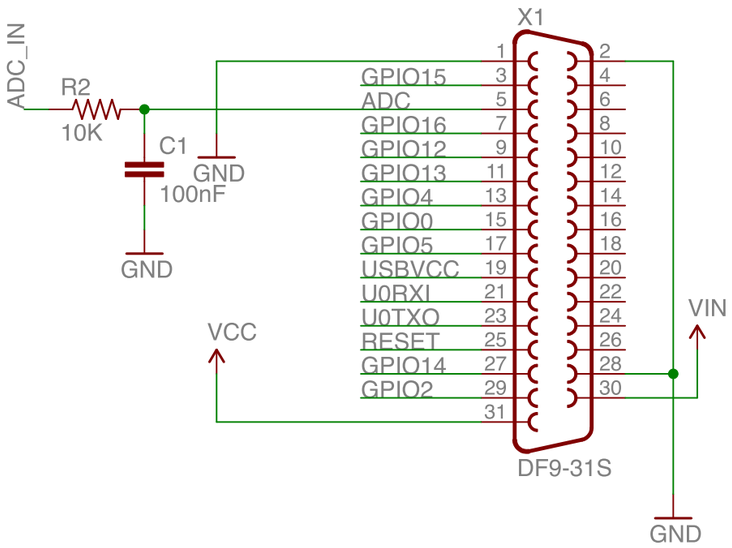

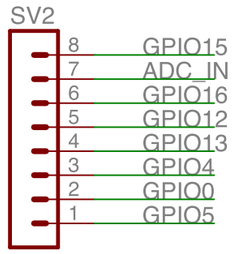

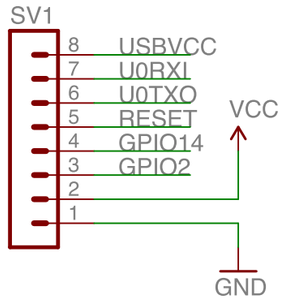

PROTOTYPE HOLE

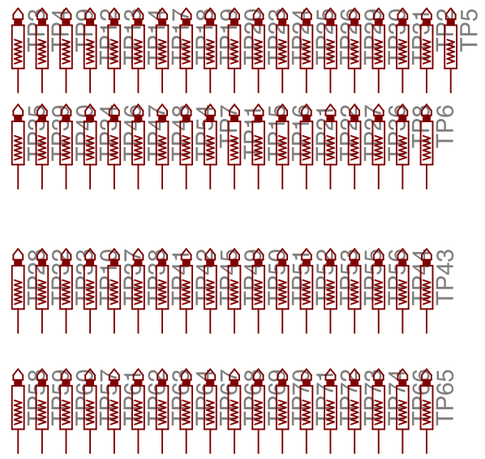

open hardware

OSHW

PROTOCENTRAL

pc_kalam_gpio_cap	
28/12/16 10:35 AM	
Sheet: 1/1	