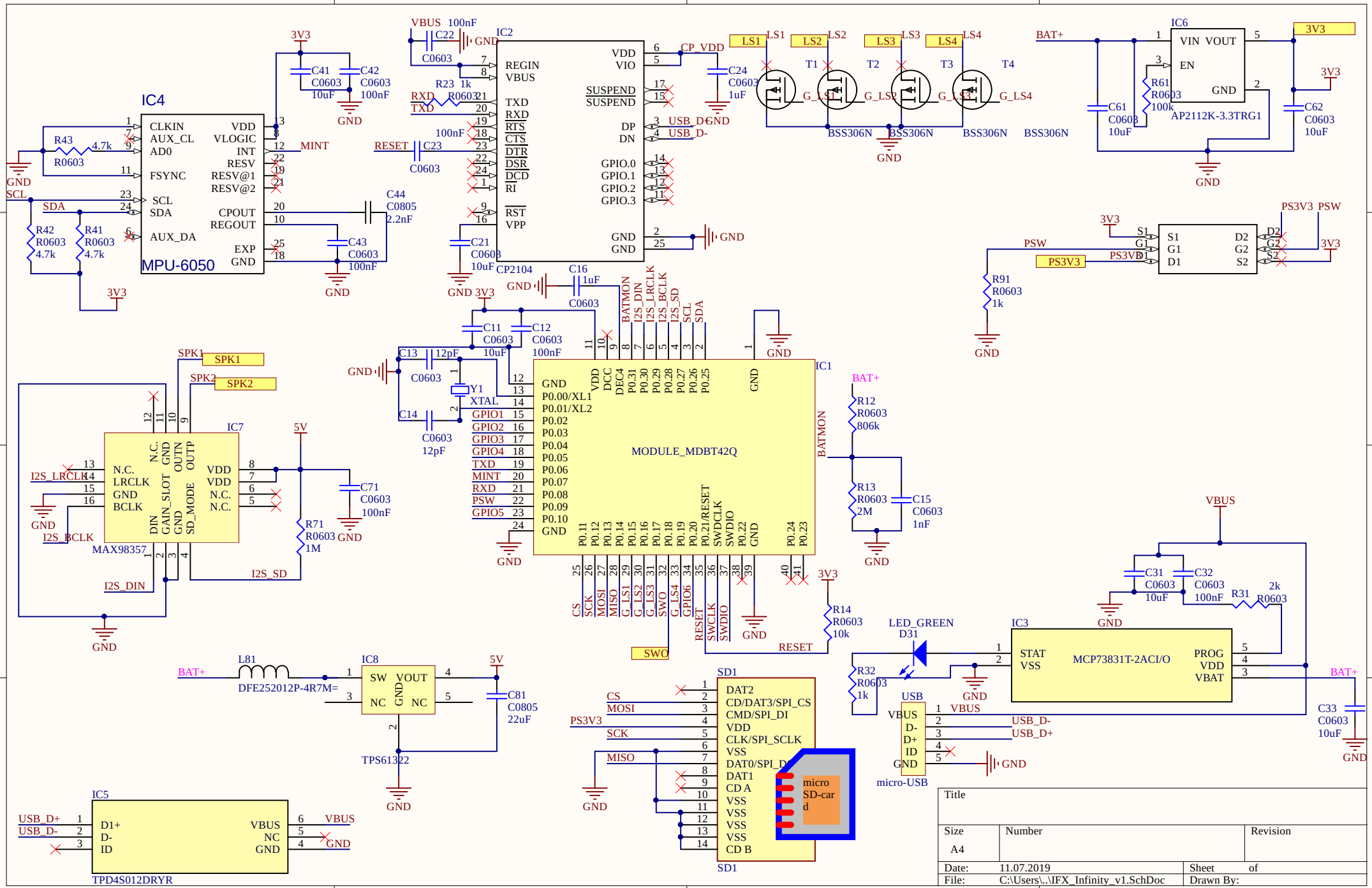
IC4
MPU-6050
CLKIN
AUX_CL
AD0
FSYNC
SCL
SDA
AUX_DA
VDD
VLOGIC
INT
RESV
RESV@1
RESV@2
CPOUT
REGOUT
EXP
GND
MINT
IC2
CP2104
REGIN
VBUS
TXD
RXD
RTS
CTS
DTR
DSR
DCD
RI
RST
VPP
VDD
VIO
SUSPEND
DP
DN
GPIO.0
GPIO.1
GPIO.2
GPIO.3
CP_VDD
USB_D+
USB_D-
IC1
MODULE_MDBT42Q
GND
P0.00/XL1
P0.01/XL2
P0.02
P0.03
P0.04
P0.05
P0.06
P0.07
P0.08
P0.09
P0.10
GPIO1
GPIO2
GPIO3
GPIO4
TXD
MINT
RXD
PSW
GPIO5
XTAL
VDD
DCC
DEC4
P0.31
P0.30
P0.29
P0.28
P0.27
P0.26
P0.25
P0.11
P0.12
P0.13
P0.14
P0.15
P0.16
P0.17
P0.18
P0.19
P0.20
P0.21/RESET
SWDCLK
SWDIO
P0.22
P0.24
P0.23
BATMON
I2S_DIN
I2S_LRCLK
I2S_BCLK
I2S_SD
SCL
SDA
CS
SCK
MOSI
MISO
G_LS1
G_LS2
G_LS3
SWO
G_LS4
GPIO6
RESET
SWCLK
SWDIO
IC6
AP2112K-3.3TRG1
VIN
VOUT
EN
GND
BAT+
3V3
LS1
LS2
LS3
LS4
T1
T2
T3
T4
G_LS1
G_LS2
G_LS3
G_LS4
BSS306N
IC7
MAX98357
N.C.
LRCLK
GND
BCLK
DIN
GAIN_SLOT
GND
SD_MODE
OUTN
OUTP
VDD
VDD
N.C.
N.C.
I2S_LRCLK
I2S_BCLK
I2S_DIN
I2S_SD
SPK1
SPK2
5V
IC8
TPS61322
SW
VOUT
NC
GND
NC
L81
DFE252012P-4R7M=
IC5
TPD4S012DRYR
D1+
D-
ID
VBUS
NC
GND
USB_D+
USB_D-
SD1
micro SD-card
DAT2
CD/DAT3/SPI_CS
CMD/SPI_DI
VDD
CLK/SPI_SCLK
VSS
DAT0/SPI_DO
DAT1
CD A
VSS
VSS
VSS
VSS
CD B
PS3V3
IC3
MCP73831T-2ACI/O
STAT
VSS
PROG
VDD
VBAT
LED_GREEN
D31
USB
micro-USB
VBUS
D-
D+
ID
GND
USB_D-
USB_D+
PSW
PS3V3
R91
R0603
1k
R12
R0603
806k
R13
R0603
2M
R14
R0603
10k
R32
R0603
1k
R71
R0603
1M
R43
4.7k
R0603
R42
R0603
4.7k
R41
R0603
4.7k
R23
1k
R0603
R61
R0603
100k
C22
C0603
C41
C0603
10uF
C42
C0603
100nF
C23
C0603
C44
C0805
2.2nF
C43
C0603
100nF
C21
C0603
10uF
C24
C0603
1uF
C16
1uF
C0603
C11
C0603
10uF
C12
C0603
100nF
C13
12pF
C0603
C14
C0603
12pF
Y1
C71
C0603
100nF
C15
C0603
1nF
C61
C0603
10uF
C62
C0603
10uF
C31
C0603
10uF
C32
C0603
100nF
R31
2k
R0603
C81
C0805
22uF
C33
C0603
10uF
Title
Size
A4
Number
Revision
Date: 11.07.2019
Sheet of
File: C:\Users\..\IFX_Infinity_v1.SchDoc
Drawn By: