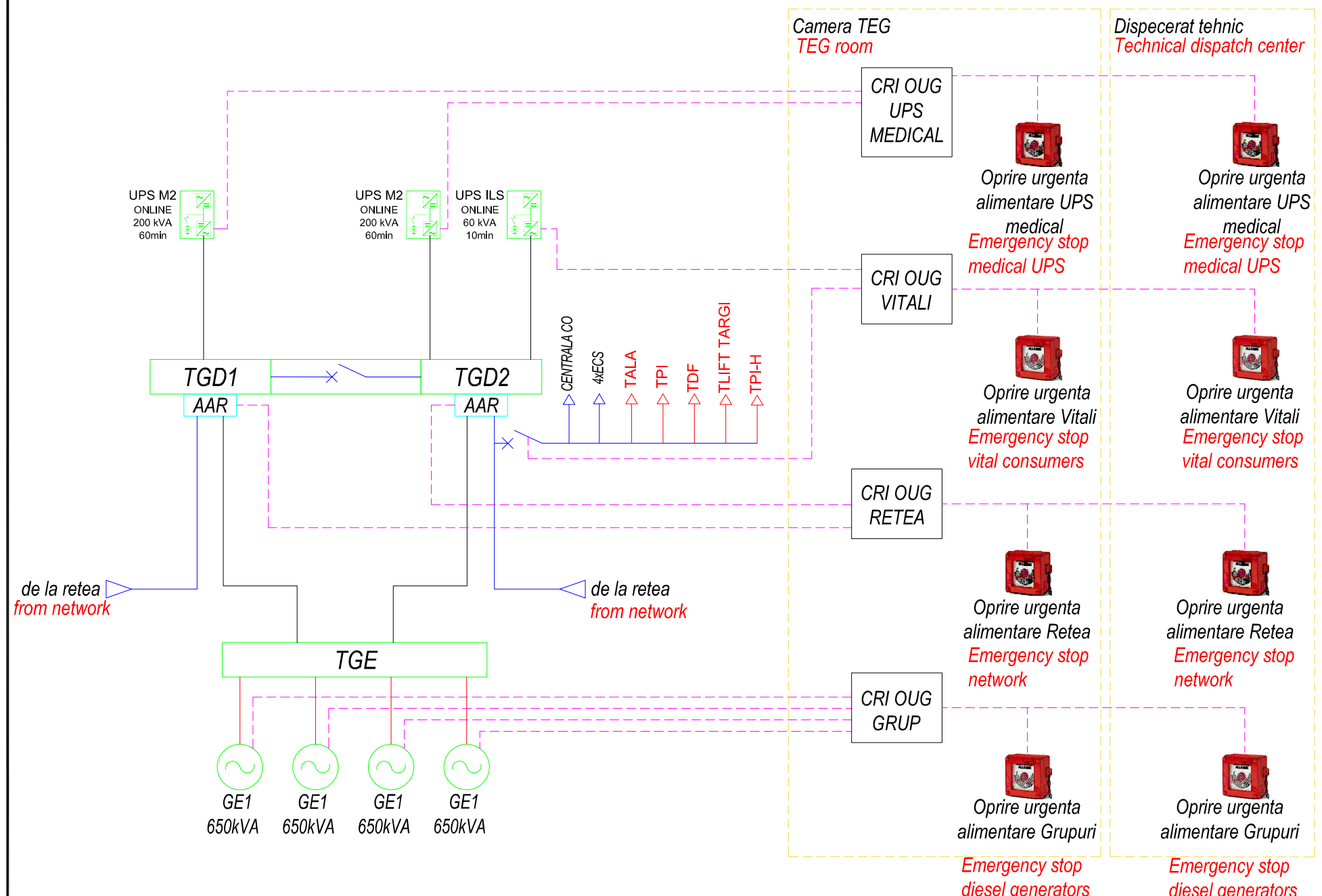

TGD1	Tablou General de Distributie 1	General switchboard 1
TGD2	Tablou General de Distributie 2	General switchboard 2
TGE	Tablou Grup Electrogen	Diesel Generator switchboard
GE	Grup Electrogen	Diesel Generator
TALA	Tablou Adapost Local Antiaerian	Civil protection shelter switchboard
TCV	Tablou Consumatori Vitali	Vital consumers switchboard
TDF	Tablou de Desfumare	Smoke exhaust switchboard
TPI	Tablou Pompe Incendiu	Fire pumps switchboard
TPI-H	Tablou Pompe Incendiu - Heliport	Heliport Fire pumps switchboard
UPS ILS	UPS Iluminat de Siguranta	Uninterruptible Power Supply for emergency lighting
UPS M1	UPS Medical 1	Medical uninterruptible Power Supply 1
UPS M2	UPS Medical 2	Medical uninterruptible Power Supply 2
ECS	Echipament de Control si Semnalizare	Control and signaling equipment
CO	Echipament detectie monoxid de carbon	Carbon monoxide detection control panel
CRI OUG	Cofret relee intermediare oprire de urgenta	Intermedite relays box for emergency stop

Buton oprire de urgenta cu geam cu lampa de semnalizare functionare — Emergency stop button with glass, with operation signal lamp

Cablu comanda — Command cable

Noata:
1.Oprirea de urgenta pentru consumatorii vitali se face doar dupa deconectarea de la retea
2.Repornirea alimentarii se poate face doar dupa inlocuirea geamului si resetarea protectiilor/echipamentelor delestate

Noata:
1.Emergency stop for vital consumers made only after disconnecting from the network
2.Restarting the power supply can be done only after replacing the glass and resetting the protected protections / equipment.

VERIFICATOR / EXPERT	NUME	SEMNATURA	CERINTELE

REFERAT de verificare/ RAPORT de expertiza tehnica
Nr. - Data: -

TRACTEBEL ENGIE
TRACTEBEL ENGINEERING S.A.
Aleeandru Constantinescu, S—011 473
Bucharest - ROMANIA
tel: +40 31 2248 101 - fax: +40 31 2248 201
eng@eeengineer@tractebel.engie.com
tractebel.engie.com

ATELIER OF ARCHITECTURE CHRISTIAN TANASCAUX

Proiect : Interconectarea cladirilor existente si constructie noua in incinta Spitalului Clinic Judetean de Urgente « Pius Branzeu » Timisoara, in vederea reorganizarii circuitelor medicale pentru departamentele: UPU, Chirurgie, ATI si Centru de Mari Arsi.

Locatie : Bulevardul Liviu Rebreanu 156, Timisoara 300723
Beneficiar : Consiliul Judetean Timis
Investitor : Ministerul Sanatatii - Romania

Pr. Nr: P.013049
Faza: PT+DE

SPECIFICATIE	NUME	SEMNATURA	Scara: --
SEF PROIECT	Arh.Christian TANASCAUX		Format: A3
MANAGER PROIECT	Ing. Liviu POPA-BELEGANTE		
VERIFICAT	Ing. Ionel OPREA		Data: FEBRUARIE 2021
DESENAT	Ing. Constantin SAMOILA		
PROIECTAT	Ing. Constantin SAMOILA		

Denumire desen:
Schema oprire de urgenta
Emergency stop diagram

Rev. 01

Pagina 1/1

Nr desen: P.013049_D8_IE036