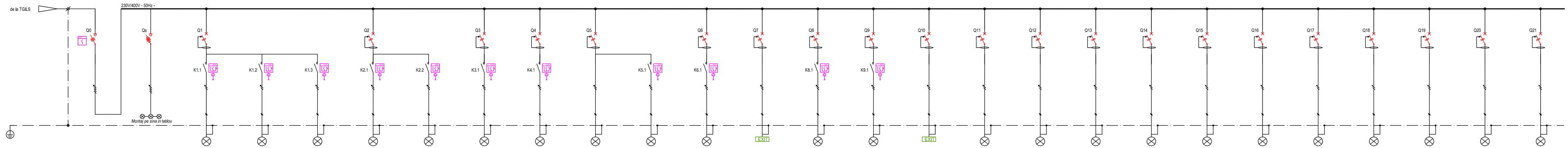

Circuit	1Q0	Cs	C1-b1	C1-b3	C1-b4	C2-b2	C2-b5	C3-b7	C4-b6	C5	C5-b8	C6-b9	C7	C8-be1	C9-be2	C10	C11	C12	C13	C14	C15	C16	C17	C18	C19	C20	C21
Descriere	INTRERUPATOR GENERAL	SEMNALIZARE PREZENTA TENSIUNE PE BARE	ILUMINAT	ILUMINAT	ILUMINAT	ILUMINAT	ILUMINAT	ILUMINAT	ILUMINAT	ILUMINAT	ILUMINAT	ILUMINAT	ILUMINAT	ILUMINAT	ILUMINAT	ILUMINAT	ILUMINAT	ILUMINAT	ILUMINAT	ILUMINAT	ILUMINAT	ILUMINAT	ILUMINAT	ILUMINAT	ILUMINAT	ILUMINAT	ILUMINAT
Destinatie	-	-	p0019	p0018	p0021	p0018	p0021	p0061	p0061	P0015, p0016	P0001	P0001	iluminat evacuare	iluminat scara exterioara	iluminat scara exterioara	iluminat evacuare scara exterioara	p0008	p0126, p0124, p0127	p0131, p0130, p0129	p0065, p0067, p0066	p0026, p0028, p0024	p0031	p0031	p0031	p0031	p0073,p0074	p0073,p0074
P [kW]	7.5/7	-	0.07	0.07	0.21	0.07	0.21	0.28	0.32	0.07	0.47	0.50	0.20	0.07	0.07	0.20	0.36	0.18	0.29	0.18	0.21	0.25	0.29	0.21	0.25	0.15	0.15
I [A]	11	-	0.07	0.07	0.21	0.07	0.21	0.28	0.32	0.07	0.47	0.50	0.20	0.07	0.07	0.20	0.36	0.18	0.29	0.18	0.21	0.25	0.29	0.21	0.25	0.15	0.15
Intrerupator	32A/4P	6A/3P+N	10A/2P			10A/2P		10A/2P	10A/2P	10A/2P		10A/2P	10A/2P	10A/2P	10A/2P	10A/2P	10A/2P	10A/2P	10A/2P	10A/2P	10A/2P	10A/2P	10A/2P	10A/2P	10A/2P	10A/2P	10A/2P
Curent Diferential ID [A]	–	–	0.03			0.03		0.03	0.03	0.03		0.03	0.03	0.03	0.03	0.03	0.03	0.03	0.03	0.03	0.03	0.03	0.03	0.03	0.03	0.03	0.03
Contactor	–	–	10A/2P+1ND	10A/2P+1ND	10A/2P+1ND	10A/2P+1ND	10A/2P+1ND	10A/2P+1ND	10A/2P+1ND	--	10A/2P+1ND	10A/2P+1ND	–	10A/2P+1ND	10A/2P+1ND	–	--	--	–	--	--	--	–	–	–	–	–
Tip Cablu	NHXH FE180 E90	–	NHXH FE180 E90	NHXH FE180 E90	NHXH FE180 E90	NHXH FE180 E90	NHXH FE180 E90	NHXH FE180 E90	NHXH FE180 E90	NHXH FE180 E90	NHXH FE180 E90	NHXH FE180 E90	NHXH FE180 E90	NHXH FE180 E90	NHXH FE180 E90	NHXH FE180 E90	NHXH FE180 E90	NHXH FE180 E90	NHXH FE180 E90	NHXH FE180 E90	NHXH FE180 E90	NHXH FE180 E90	NHXH FE180 E90	NHXH FE180 E90	NHXH FE180 E90	NHXH FE180 E90	NHXH FE180 E90
Sectiune	5G6	–	3G1.5	3G1.5	3G1.5	3G1.5	3G1.5	3G1.5	3G1.5	3G1.5	3G1.5	3G1.5	3G1.5	3G1.5	3G1.5	3G1.5	3G1.5	3G1.5	3G1.5	3G1.5	3G1.5	3G1.5	3G1.5	3G1.5	3G1.5	3G1.5	3G1.5

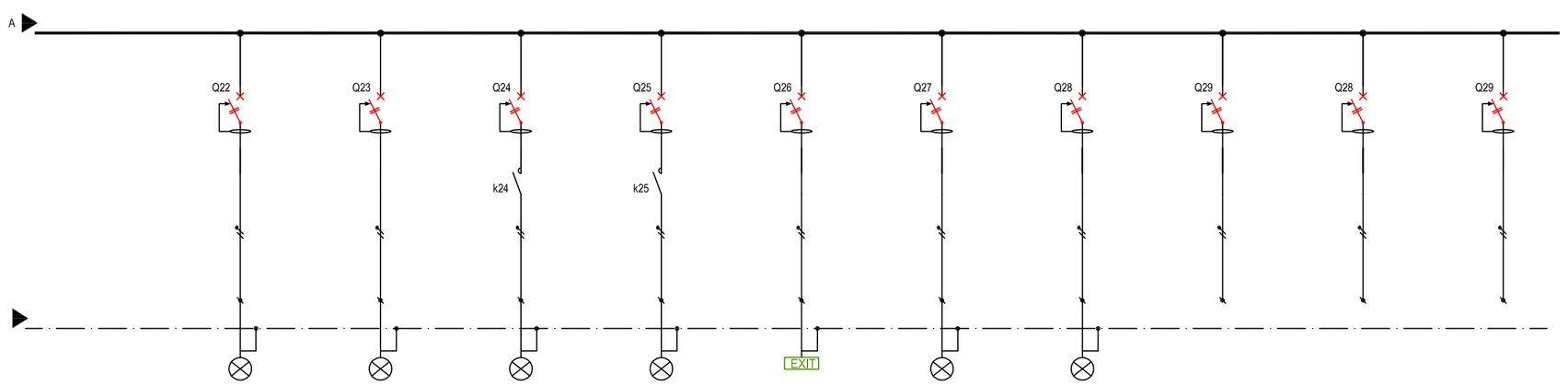

Circuit	C22	C23	C24-bsc1	C24-bsc2	C26	C27	C28	C29	C30	C31
Descriere	ILUMINAT	ILUMINAT	ILUMINAT	ILUMINAT	ILUMINAT	ILUMINAT	ILUMINAT	Rezerva	Rezerva	Rezerva
Destinatie	p0062, p0007	p0000	casa scarii	casa scarii	iluminat evacuare casa scarii	p0025	iluminat copertina aces	–	--	--
P [kW]	0.29	0.36	0.2	0.2	0.1	0.05	0.4	0,50	0,50	0,50
I [A]	0.29	0.36	0.9	0.9	0.9	0.2	1.9	1.2	1.2	1.2
Intrerupator	10A/2P	10A/2P	10A/2P	10A/2P	10A/2P	10A/2P	10A/2P	10A/2P	10A/2P	10A/2P
Curent Diferential ID [A]	0.03	0.03	0.03	0.03	0.03	0.03	0.03	0.03	0.03	0.03
Contactor	–	–	10A/2P+1ND	10A/2P+1ND	–	–	–	–	--	--
Tip Cablu	NHXH FE180 E90	NHXH FE180 E90	NHXH FE180 E90	NHXH FE180 E90	NHXH FE180 E90	NHXH FE180 E90	NHXH FE180 E90	–	--	--
Sectiune	3G1.5	3G1.5	3G1.5	3G1.5	3G1.5	3G1.5	3G1.5	–	--	--

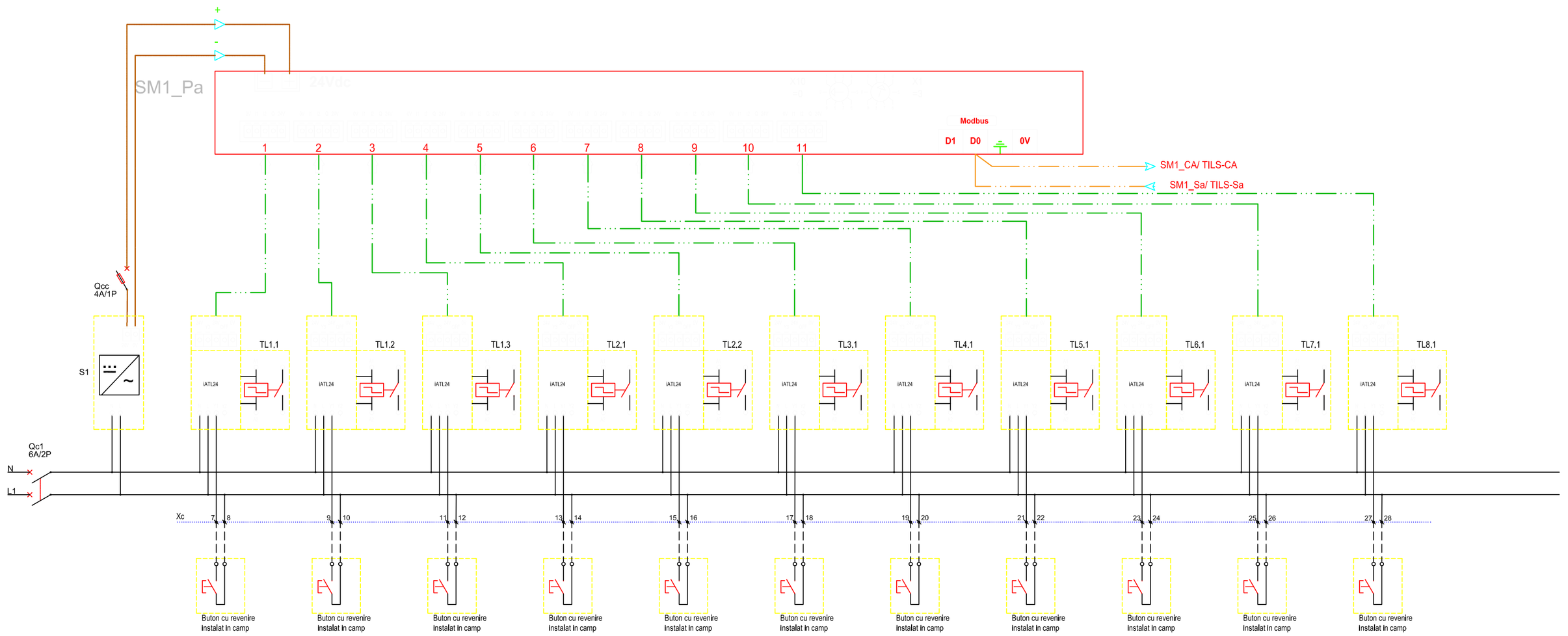

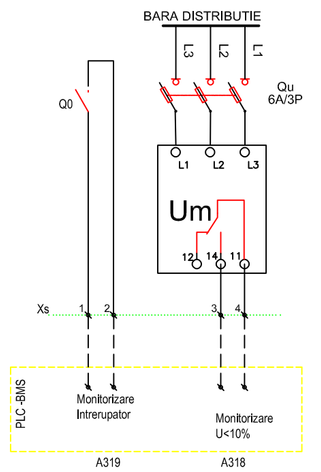

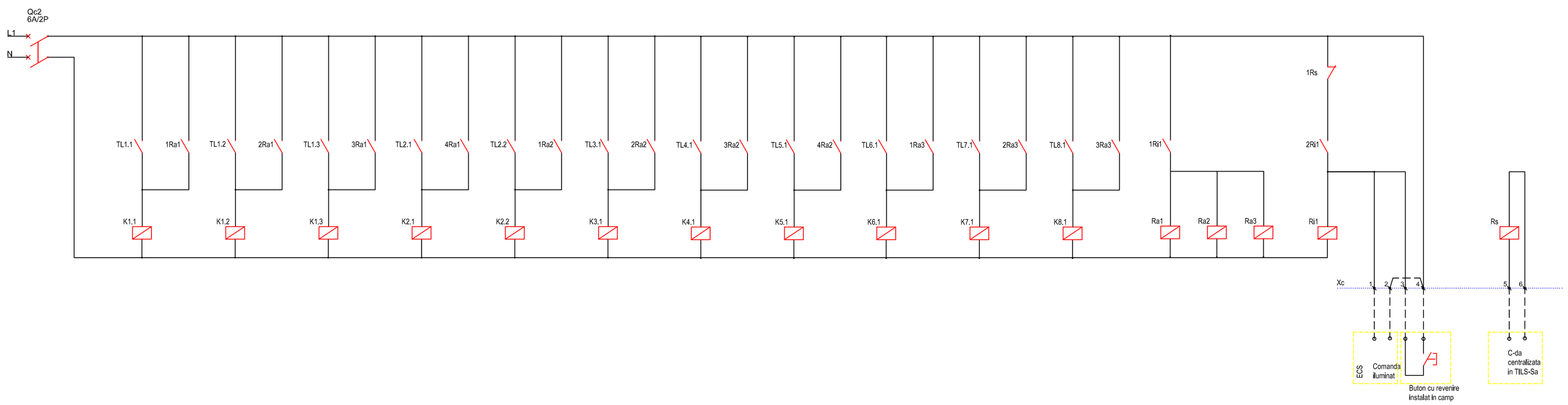

Um=400V - TN-S
In = 32A
Isc=6kA
IP - 31
Carcasa metalica vopsita in camp electrostatic
Intrari-Iesiri cabluri pe sus prin gherea laterala
Tabloul va fi prevazute cu o rezerva de spatiu si distribuite neechipata de 30% .
Concepitia sistemului trebuie sa fie validata prin incercari tip, conform SR EN 61439-1.
Carcasa metalica a tablouluii electric se va lega la conductorul principal de legare la pamant.
Tabloul electric se va verifica vizual si se va face proba sub tensiune inainte de racordarea circuitelor electrice

VERIFICATOR / EXPERT	NUME	SEMNATURA	CERINTELE

TRACTEBEL ENGIE
TRACTEBEL ENGINEERING S.A.
Str. Barbu Vacarescu nr. 310, Sector 2, 077 075 Bucuresti - Romania
tel: +40 21 2040 111 / fax: +40 21 2040 201
www.tractebel-engineering.ro / www.engie.ro
e-business@tractebel.com

ATELIER OF ARCHITECTURE CHRISTIAN TANASCAUX

REFERAT de verificare/ RAPORT de expertiza tehnica
Nr. -
Data: -

Proiect : Interconectarea cladirilor existente si construcilie noua in incinta Spitalului Clinic Judetean de Urgente « Pius Branzeu » Timisoara, in vederea reorganizarii circuitelor medicalle pentru departamentele: UPU, Chirurgie, ATI si Centru de Mari Arsi.

Pr. Nr: P.013049

Locatie : Bulevardul Liviu Rebreanu 156, Timisoara 300723
Beneficiar : Consiliul Judetean Timis
Investitor : Ministerul Sanatatii - Romania

SPECIFICATIE	NUME	SEMNATURA
SEF PROIECT	Arh.Christian TANASCAUX	
MANAGER PROIECT	Ing. Liviu POPA- BELEGANTE	
VERIFICAT	Ing. Ionel OPREA	
DESENAT	Ing. Constantin SAMOILA	
PROIECTAT	Ing. Constantin SAMOILA	

Scara: –
Format: A0+
Data: Februarie 2021

Denumire desen:
SCHEMA MONOFILARA TILS-Pa
SINGLE LINE DIAGRAM TILS-Pa

Faza: PT+DE
Rev. 00
Pagina 1/1

Nr desen: P.013049_D8_IE075