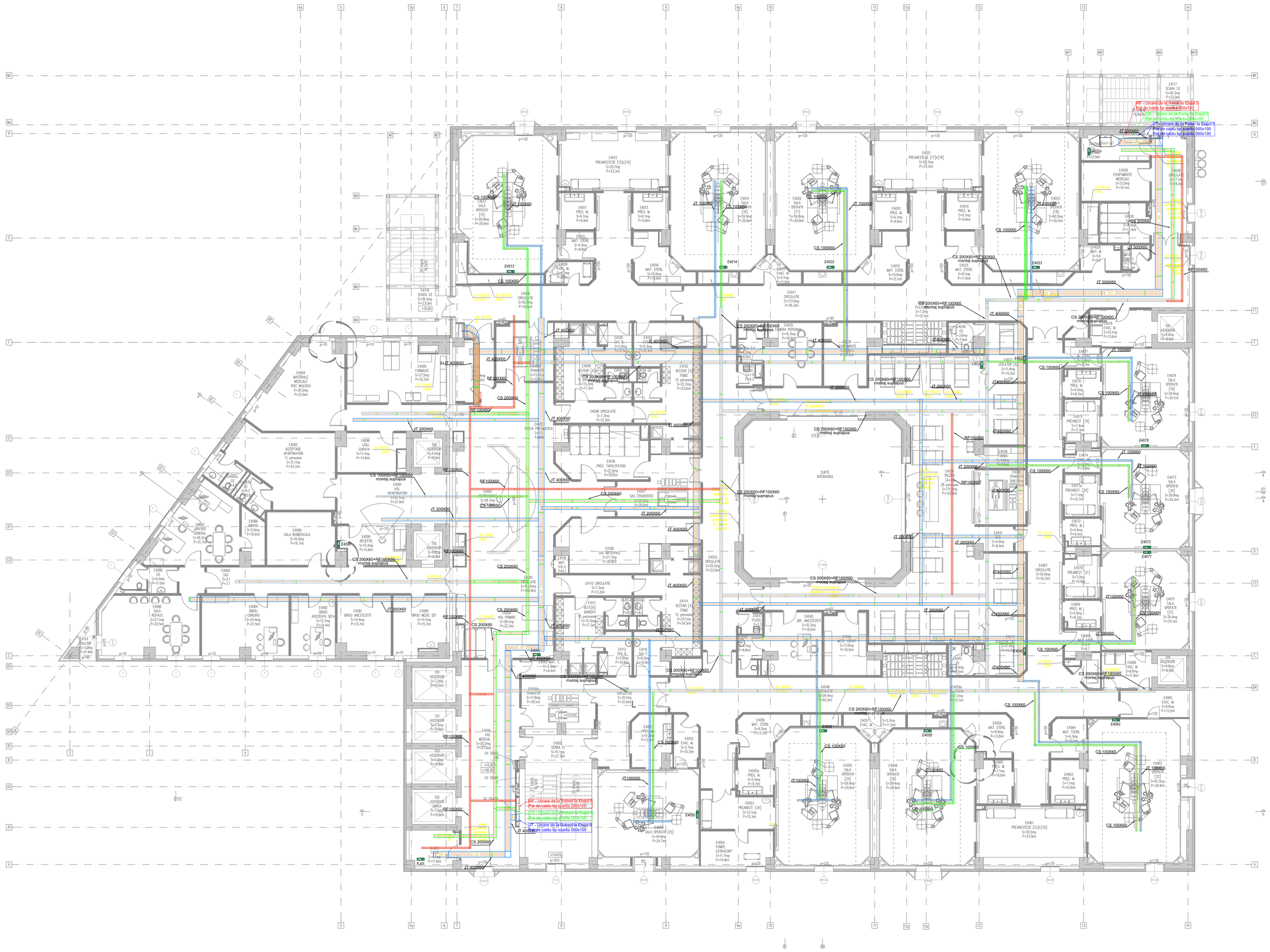

D1

Detaliu de montaj pat de cablu cu tija filetata in plafon de beton armat

Detail of cable tray assembly with threaded rod in concrete ceiling

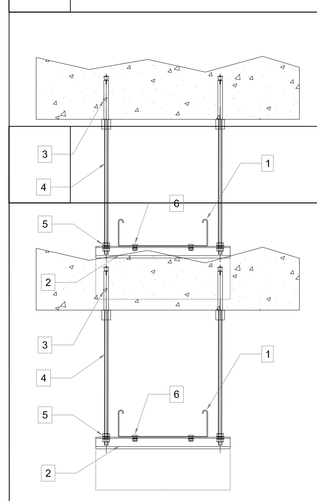

No.	Descriere	Description
1	Pat de cablu	Cable tray
2	Profil C	C Profile
3	Diblu	Expansion rel
4	Tija filetata	Threaded rod
5	Piulita + saiba	Nut + washer
6	Surub + saiba + piulita	Screw + washer + nut

D2

Detaliu de montaj pat de cablu suprapuse cu montant si consola in plafon de beton armat

Detail of cable tray assembly superimposed with upright and console in concrete ceiling

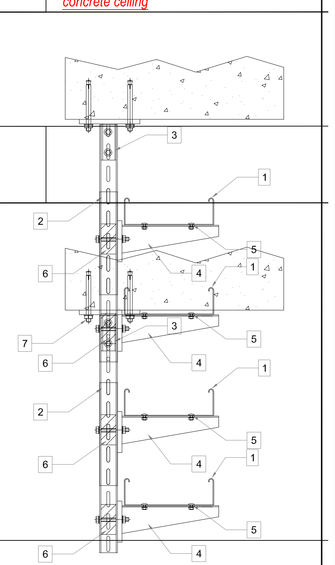

No.	Descriere	Description
1	Pat de cablu	Cable tray
2	Profil U	U Profile
3	Tija filetata	Threaded rod
4	Consola	Console
5	Surub + saiba + piulita	Screw + washer + nut
6	Distanter	Spacer
7	Corespund	Expansion rel

D3

Detaliu de montaj pat de cablu cu tija filetata in plafon de beton armat

Detail of cable tray assembly with threaded rod in concrete ceiling

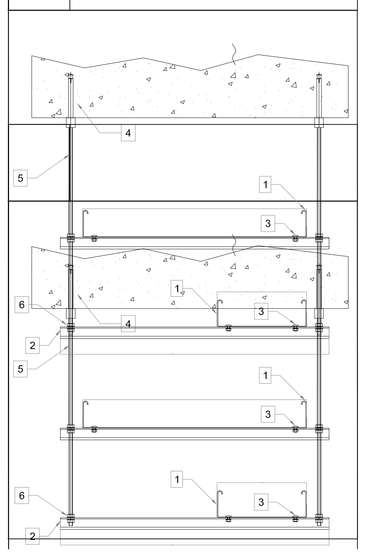

LEGENDA:
LEGEND:

	Platbanda de otel zincat OL-Zn 25x4mm, conexiune la priza de pamant a centuri/echipamentelor din camerele tehnice prin intermediul pleselor de separatie. Galvanized steel flatbar OL-Zn 25x4mm, connection to the grounding of the bells / equipment in the technical rooms through the separation pieces.
	Piesa de separatie pentru masurarea rezistentei de disperse a prizei de pamant *Separation piece for measuring the dispersion resistance of the earth grounding*
PLAY	Bara egalizare potential montata incastrat conectata la centura principala de legare la pamant. *Grounding plate recessed mounted, connected to the main grounding belt*
	Pat de cablu fibtail pentru joasa tensiune, zincat la rece, dimensiunile indicate pe plan *Cable tray used for low voltage, cold galvanized, dimensions indicated on the plan*
	Pat de cablu fibtail pentru curenti slabi, zincat la rece, dimensiunile indicate pe plan *Cable tray used for low currents, cold galvanized, dimensions indicated on the plan*
	Pat de cablu rezistent la foc 90 minute, fibtail pentru iluminat de siguranta si echipamente cu rol in securitate in caz de incendiu, zincat la rece, dimensiunile indicate pe plan *Fire resistant cable tray 90 minutes, used for safety lighting and equipment with a role in safety in case of fire, cold galvanized, dimensions indicated on the plan*
	Pat de cablu fibtail pentru joasa tensiune, zincat la cald, cu capac de protectie, dimensiunile indicate pe plan *Cable tray used for low voltage, hot-dip galvanized, with protective cover, dimensions indicated on the plan*
	Pat de cablu rezistent la foc 90 minute fibtail pentru iluminat de siguranta si echipamente cu rol in securitate in caz de incendiu, zincat la cald, cu capac de protectie, dimensiunile indicate pe plan *Fire resistant cable tray 90 minutes used for safety lighting and fire safety equipment, hot-dip galvanized, with protective cover, dimensions indicated on the plan*
	Patun de cablu folosite pentru curenti slabi si iluminat de siguranta, echipamente cu rol in securitate in caz de incendiu, montate suprapus, dimensiunile indicate pe tipuri
	Patun de cablu folosite pentru curenti slabi si iluminat de siguranta, echipamente cu rol in securitate in caz de incendiu, montate suprapus, dimensiunile indicate pe tipuri *Patun de cablu folosite pentru curenti slabi si iluminat de siguranta, echipamente cu rol in securitate in caz de incendiu, montate suprapus, dimensiunile indicate pe tipuri.