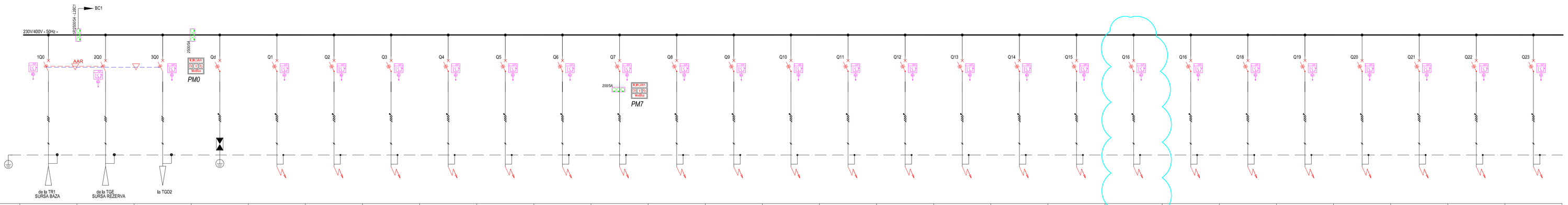

Circuit	1C0	2C0		Cd	C1	C2	C3	C4	C5	C6	C7	C8	C9	C10	C11	C12	C13	C14	C15	C16	C17	C18	C19	C20	C21	C22	C23
Descriere	INVERSOR AUTOMAT DE SURSA		CUPLA	DESCARCATOR SUPRATENSIUNI ATMOSFERICE	Tablou Consumatori vitali	Tablou Electric UPS-M1	RACORD	RACORD	RACORD	RACORD	Racord CT	Tablou Electric CARM1	Tablou Electric CARM2	Tablou Electric UPSG	Tablou Electric UPSG	Tablou Electric UPS Subsol a	Tablou Electric UPS Subsol b	Tablou Electric UPS Parter a	Tablou Electric UPS Parter b	Racord DEGIVRARE RAMPA AMBULANTE	Tablou Electric UPS Etaj1 a	Tablou Electric UPS Etaj1 b	Tablou Electric UPS Etaj2 a	Tablou Electric UPS Etaj2 b	Tablou Electric UPS Etaj3 a	Tablou Electric UPS Etaj3 b	Tablou Electric UPS Etaj4 a
Destinatie	–	–		–	TCV	TUPS-M1	LIFT1	LIFT2	LIFT3	LIFT4	CT	TCARM1	TCARM2	TUPSG	TUPSG	TUSa	TUSb	TUPa	TUPb	DEGIVRARE RAMPA AMBULANTE	TUE1a	TUE1b	TUE2a	TUE2b	TUE3a	TUE3b	TUE4a
P [kW]	5100/ 1226	5100/ 1226		–	67/ 53	811 / 164	15	15	15	15	85/ 60	63/ 10	87,5/ 14	600/ 163	588/ 183	20/ 8,1	26/ 11	59/ 26	37/ 15	20	59/26	45/18	31/ 12	15/ 5,7	48/ 17	91/ 33	43/ 17
I [A]	2085	2085		PRD1/50kA	90	279	25.5	25.5	25.5	25.5	101	17	23	276	311	14	18	43	26	34	44	29	21	10	30	55	28
Intrerupator	2500A/3P	2500A/3P	2500A/3P	100A/4P	100A/4P	630A/4P	40A/4P	40A/4P	40A/4P	40A/4P	160A/4P	63A/4P	63A/4P	315A/4P	315A/4P	50A/4P	50A/4P	50A/4P	50A/4P	50A/4P	63A/4P	50A/4P	50A/4P	50A/4P	50A/4P	63A/4P	50A/4P
Curent Diferential ID [A]	–	–		–	–	–	–	–	–	–	–	–	–	–	–	–	–	–	–	–	–	–	–	–	–	–	–
Contactor	–	–	–	–	–	–	–	–	–	–	–	–	–	–	–	–	–	–	–	–	–	–	–	–	–	–	–
Tip Cablu	N2XH	N2XH	N2XH	–	NHXH	N2XH	N2XH	N2XH	N2XH	N2XH	N2XH	N2XH	N2XH	N2XH	N2XH	N2XH	N2XH	N2XH	N2XH	N2XH	N2XH	N2XH	N2XH	N2XH	N2XH	N2XH	N2XH
Sectiune	8x3x(1x240) + 4x(1G240)	8x3x(1x240) + 4x(1G240)	8x3x(1x240) + 4x(1G240)	–	4x35+16	2x4x(1x185)+1x(1x185)	5x10	5x10	5x10	5x10	4x70+35	5x16	5x16	4x(1x185)+1x95	4x(1x185)+1x95	5G10	5G10	5G10	5G10	5G10	5G16	5G10	5G10	5G10	5G10	5G16	5G10

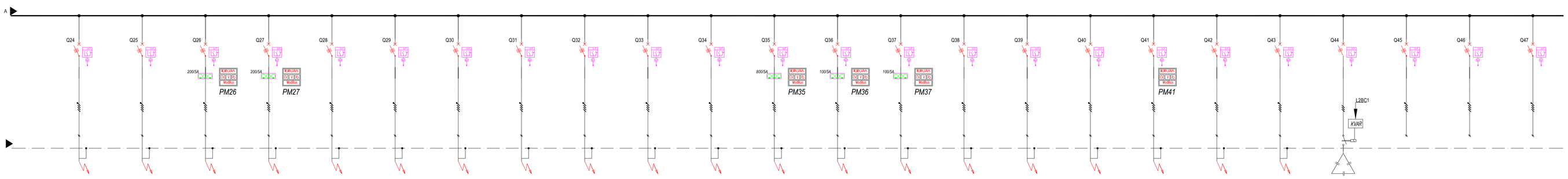

Circuit	C24	C25	C26	C27	C28	C29	C30	C31	C32	C33	C34	C35	C36	C37	C38	C39	C40	C41	C42	C43	C44	C45	C46	C47
Descriere	Tablou Electric UPS Etaj4 b	Tablou Electric UPS Etaj5	Racord	Racord	Tablou Electric HVAC1	Tablou Electric HVAC2	Tablou Electric Pompe FRIG	Tablou Electric HVAC-S	Tablou Electric HVAC-E1	RACORD	RACORD	Chiller 1	RACORD	RACORD	Tablou Electric STR	Tablou Electric FM-VC	Tablou Electric FM-AC	Tablou Electric AM	Tablou Electric HVAC-MA	RACORD	Baterie Condensatori	REZERVA	REZERVA	REZERVA
Destinatie	TUE4b	TUE5	POMPA CALDURA	POMPA CALDURA	THVAC1	THVAC2	TPF	THVAC-S	THVAC-E1	SERVICII GENERATOR	SERVICII GENERATOR	Chiller 1	Sterilizator 1800L	Sterilizator 1800L	TSTR	TFM-VC	TFM-AC	TAM	THVAC-MA	pompa apa pluviala	BC 1	–	–	–
P [kW]	49/18	39/ 13	85.5	85.5	797/ 396	798/ 394	68/ 33	97 / 51	126/ 58	3	3	407/ 284	50	50	120/ 58	72/ 46	102/ 36	27/ 19	296/ 141	14,4	300kVAr (12x25kVAr)	–	–	–
I [A]	31	21	145	145	673	670	57	87	98	2.55	2.55	484	85	85	99	78	60	32	240	26		–	–	–
Intrerupator	50A/4P	50A/4P	160A/4P	160A/4P	800A/4P	800A/4P	80A/4P	100A/4P	125A/4P	16A/4P	16A/4P	630A/4P	100A/4P	100A/4P	125A/4P	80A/4P	80A/4P	50A/4P	250A/4P	63A/4P	630A/3P	100A/4P	100A/4P	100A/4P
Curent Diferential ID [A]	–	–	–	–	–	–	–	–	–	–	–	–	–	–	–	–	–	–	–	–	–	–	–	–
Contactor	–	–	–	–	–	–	–	–	–	–	–	–	–	–	–	–	–	–	–	–	–	–	–	–
Tip Cablu	N2XH	N2XH	N2XH	N2XH	N2XH	N2XH	N2XH	N2XH	N2XH	N2XH	N2XH	N2XH	N2XH	N2XH	N2XH	N2XH	N2XH	N2XH	N2XH	N2XH	N2XH	–	–	–
Sectiune	5G10	5G10	4x70+35	4x70+35	2x3(1x240)+(1x240)	2x3(1x240)+(1x240)	4x25+16	4x35+16	4x35+16	5x2.5	5x2.5	2x3x(1x185)+(1x185)	4x35+16	4x35+16	4x50+25	4x25+16	4x25+16	5x16	4x120+70	5x16	2x(3x185+95)	–	–	–

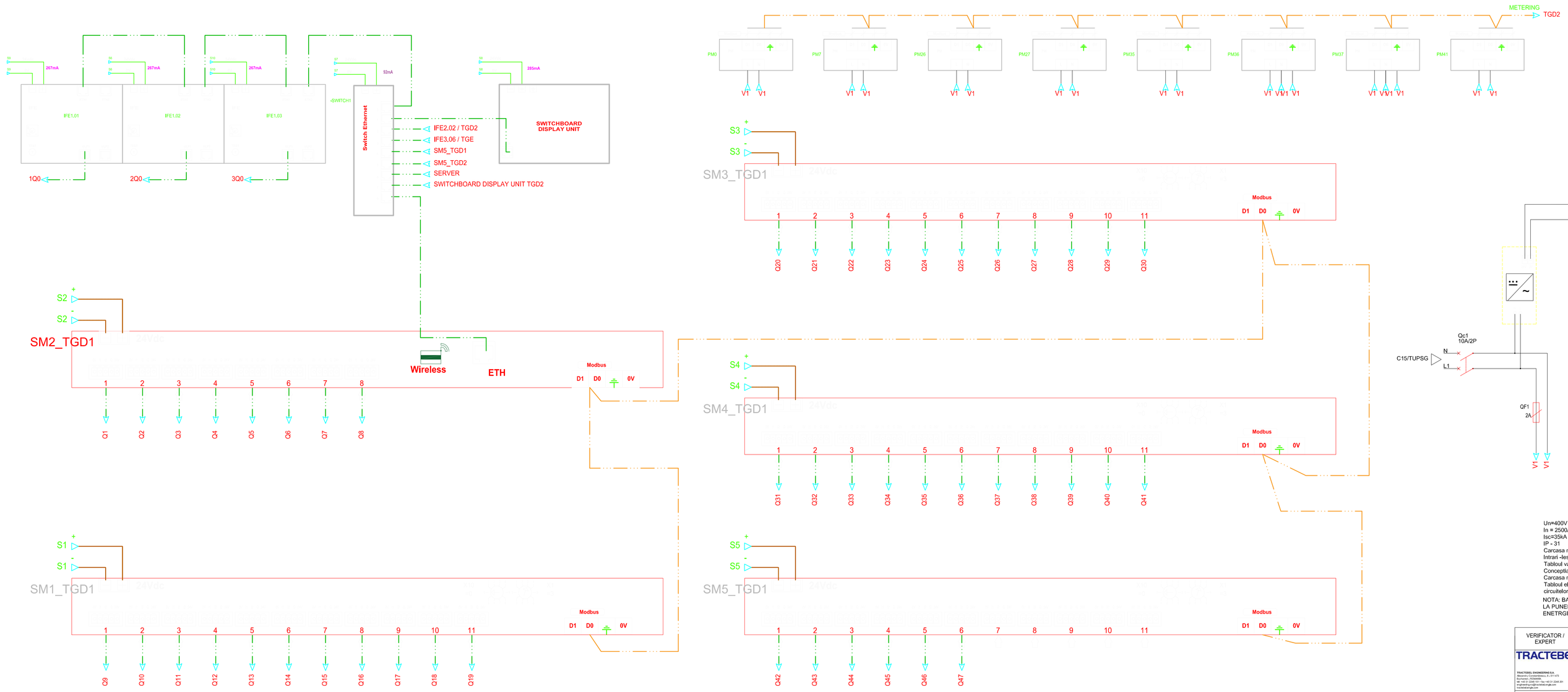

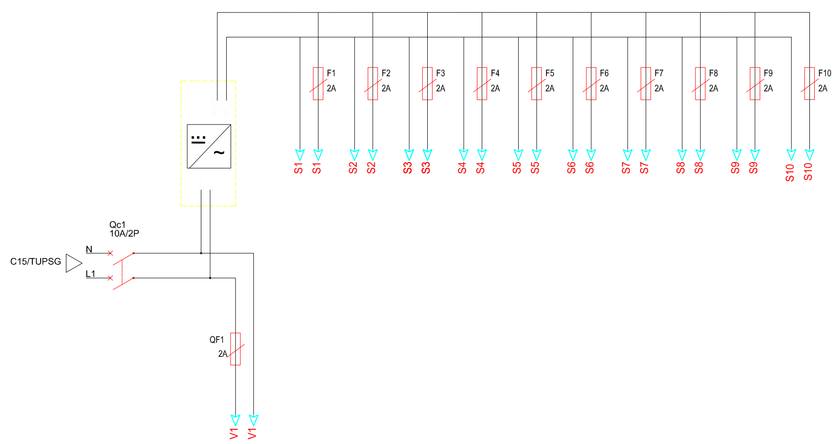

Un=400V - TN-C-S
In = 2500A
Isc=35kA
IP - 31
Carcasa metalica vopsita in camp electrostatic
Intrari -Iesiri cabluri pe sus prin ghena laterala
Tabloul va fi prevazute cu o rezerva de spatiu si distribuite neechipata de 30% .
Conceptia sistemului trebuie sa fie validata prin incercari tip, conform SR EN 61439-1.
Carcasa metalica a tablouluí electric se va lega la conductorul principal de legare la pamant.
Tabloul electric se va verifica vizual si se va face proba sub tensiune inainte de racordarea circuitelor electrice
NOTA: BATERIA DE COMPENSARE SE VA INSTALA DUPA REALIZARE MASURITORILOR LA PUNEREA IN FUNCTIUNE A INSTALATIEI SI DETERMINARI VALORI REALE A ENETRGIEI REACTIVE

Inversorul automat de sursa (AAR) va avea urmatoarele functii:
- Functionare in regim automat
- Functionare In regim manual cu posibilitate de selecare sursa
- Semalizare prezenta/lipsa tensiune pe fiecare sursa
- Posibilitate de setare timp de intarziere la revenire pe sursa de baza
- C-da start/stop generatoare

VERIFICATOR / EXPERT	NUME	SEMNATURA	CERINTELE	REFERAT de verificare/ RAPORT de expertiza tehnica Nr: - Data: -

TRACTEBEL ENGINEERING S.A.
Bucuresti - Romania
Str. Ion Mihalache nr. 15-17, sector 1
tel: (+40 21) 2066 111* fax: (+40 21) 2066 201
www.tractebel-engineering.ro; info@tractebel.ro
ATELIER OF ARCHITECTURE CHRISTIAN TANASCAUX

Proiect : Interconectarea cladirilor existente si construcie noua in incinta Spitalului Clinic Judetean de Urgente « Pius Branzeu » Timisoara, in vederea reorganizarii circuitelor medicale pentru departamentele: UPU, Chirurgie, ATI si Centru de Mari Arsi.

Pr. Nr: P.013049

Locatie : Bulevardul Liviu Rebreanu 156, Timisoara 300723
Beneficiar : Consiliul Judetean Timis
Investitor : Ministerul Sanatatii - Romania

Faza: PT+DE

SPECIFICATIE	NUME	SEMNATURA	Scara: --
SEF PROIECT	Arh.Christian TANASCAUX		Format: A0+
MANAGER PROIECT	Ing. Liliu POPA- BELEGANTE		
VERIFICAT	Ing. Ionel OPREA		Data: Februarie 2021
DESENAT	Ing. Constantin SAMOILA		
PROIECTAT	Ing. Constantin SAMOILA		

Denumire desen: SCHEMA MONOFILARA TGD1
SINGLE LINE DIAGRAM TGD1

Rev. 01

Pagina 1/1

Nr desen: P.013049_D8_IE040