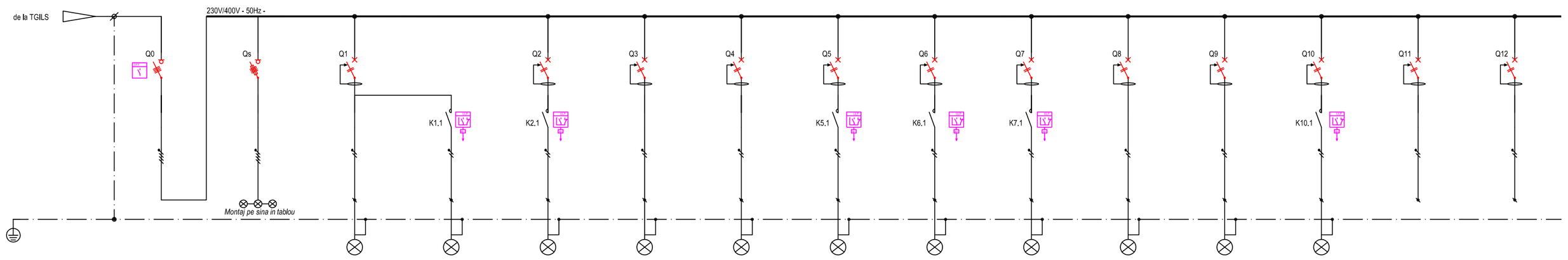

Circuit	1Q0	Cs	C1	C1-b1	C2	C3	C4	C5-b3	C5-b5	C5-b7	C8	C9	C10	C11	C12
Descriere	INTRERUPATOR GENERAL	SEMNALIZARE PREZENTA TENSIUNE PE BARE	ILUMINAT	ILUMINAT	ILUMINAT	ILUMINAT	ILUMINAT	ILUMINAT	ILUMINAT	ILUMINAT	ILUMINAT	ILUMINAT	ILUMINAT	Rezerva	Rezerva
Destinatie	-	-	e5000	e5000	e5000	e5003, e5005	Iluminat evacuare e5	iluminat terasa	iluminat terasa	iluminat terasa	e5007a, e5007b,	e5007c, e5007d, e5007e, e5007f,	iluminat terasa	–	–
P [kW]	3.5 / 2.8	-	0.05	0.05	0.05	0.15	0.20	0.65	0.68	0.60	0.32	0.36	0.3	0,50	0,50
I [A]	4.4	-	0.2	0.2	0.2	0.7	0.9	3.1	3.2	2.8	1.5	1.7	1.4	1.2	1.2
Intrerupator	32A/4P	6A/3P+N	10A/2P	–	10A/2P	10A/2P	10A/2P	10A/2P	10A/2P	10A/2P	10A/2P	10A/2P	10A/2P	10A/2P	10A/2P
Curent Diferential ID [A]	–	–	0.03	–	0.03	0.03	0.03	0.03	0.03	0.03	0.03	0.03	0.03	0.03	0.03
Contactor	–	–		10A/2P+1ND	10A/2P+1ND	–	–	10A/2P	10A/2P	10A/2P	–	–	10A/2P	–	–
Tip Cablu	NHXH FE180 E90	–	NHXH FE180 E90	NHXH FE180 E90	NHXH FE180 E90	NHXH FE180 E90	NHXH FE180 E90	NHXH FE180 E90	NHXH FE180 E90	NHXH FE180 E90	NHXH FE180 E90	NHXH FE180 E90	NHXH FE180 E90	–	–
Sectiune	5G6	–	3G1.5	3G1.5	3G1.5	3G1.5	3G1.5	3G1.5	3G1.5	3G1.5	3G1.5	3G1.5	3G1.5	–	–

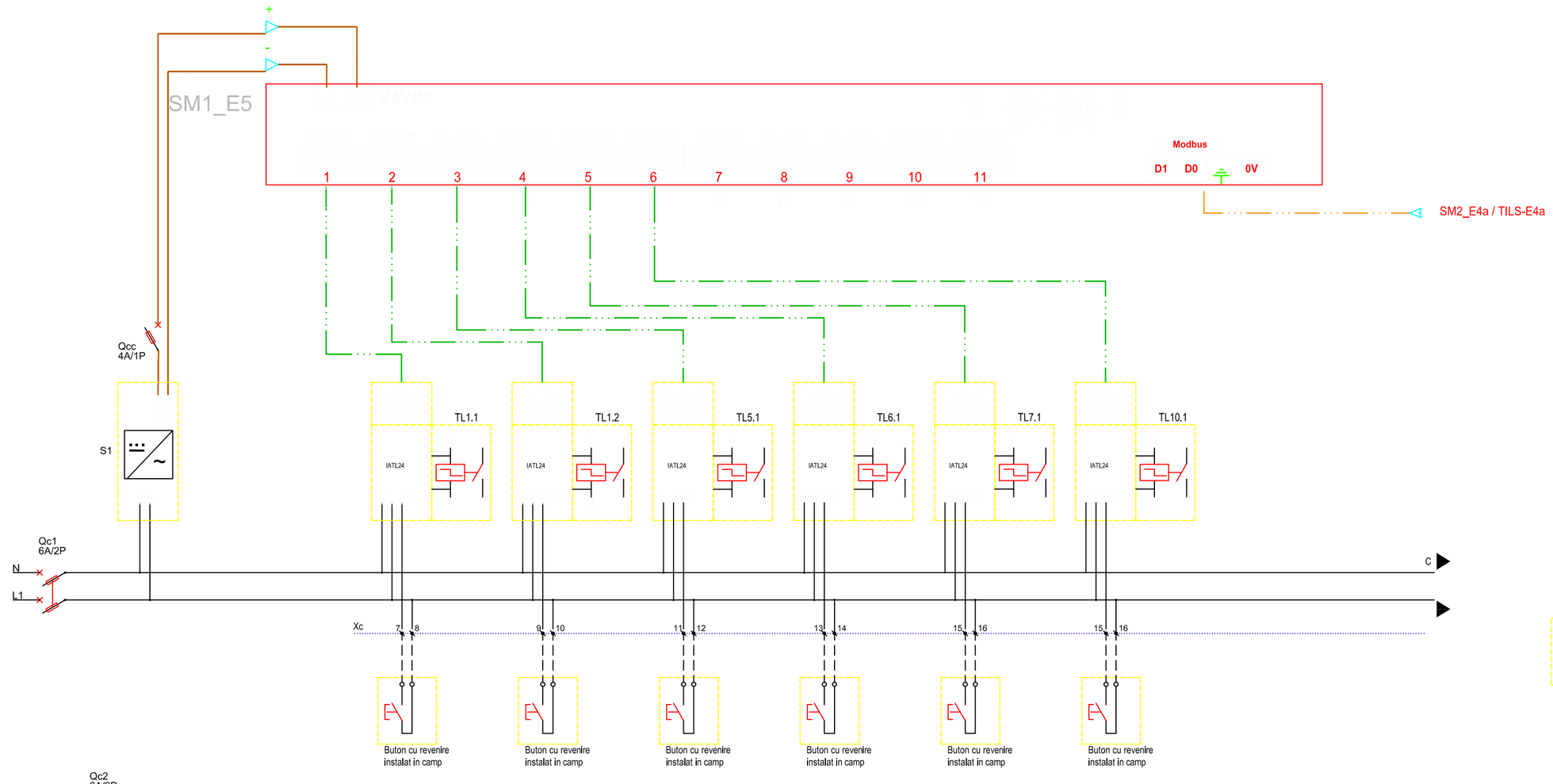

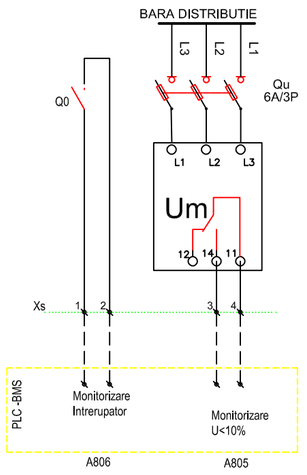

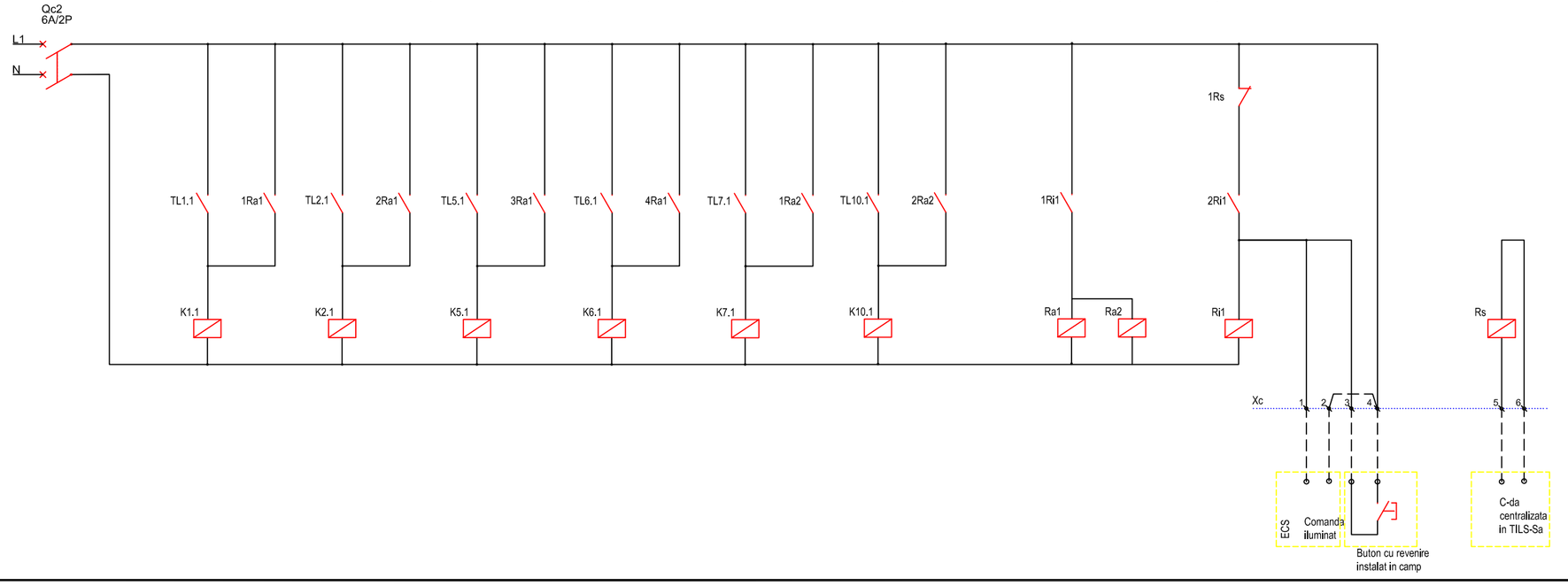

Un=400V - TN-S
In = 32A
Isc=6kA
IP - 31
Carcasa metalica vopsita in camp electrostatic
Intrari -Iesiri cablurl pe sus prin ghena laterala
Tabloul va fi prevazute cu o rezerva de spatiu si distribuite neechipata de 30% .
Conceptia sistemului trebuie sa fie validata prin incercari tip, conform SR EN 61439-1.
Carcasa metalica a tabloului electric se va lega la conductorul principal de legare la pamant.
Tabloul electric se va verifica vizual si se va face proba sub tensiune inainte de racordarea circuitelor electrice

VERIFICATOR / EXPERT	NUME	SEMNATURA	CERINTELE	REFERAT de verificare/ RAPORT de expertiza tehnica Nr. - Data: -	
TRACTEBEL ENGIE TRACTEBEL ENGINEERING S.A. Bucharest - Romania Str.Ion Mihalache 11-15, Sector 1, 013343 Phone: +40 21 529 2000 Fax: +40 21 2300 201 engineering@tractebel-engie.com tractebel.engie.com	ATELIER OF ARCHITECTURE CHRISTIAN TANASCAUX			Proiect : Interconectarea cladirilor existente si constructie noua in incinta Spitalului Clinic Judetean de Urgente + Plus Branzeu + Timisoara, in vederea reorganizarii circuitelor medicale pentru departamentele: UPU, Chirurgie, ATI si Centru de Mari Arsi.	Pr. Nr: P.013049
				Locatie : Bulevardul Liviu Rebreanu 156, Timisoara 300723 Beneficiar : Consiliul Judetean Timis Investitor : Ministerul Sanatatii - Romania	Faza: PT+DE
SPECIFICATIE	NUME	SEMNATURA	Scara: –		
SEF PROIECT	Arh.Christian TANASCAUX		Format: A0+	Denumire desen: SCHEMA MONOFILARA TILS-E5 SINGLE LINE DIAGRAM TILS-E5	Rev. 00
MANAGER PROIECT	Ing. Liviu POPA- BELEGANTE				
VERIFICAT	Ing. Ionel OPREA		Data: Februarie 2021		
DESENAT	Ing. Constantin SAMOILA				Pagina 1/1
PROIECTAT	Ing. Constantin SAMOILA			Nr desen: P.013049_D8_IE086	