This drawing cannot be reproduced nor given to a third party without a written authorization by CAVAGNA GROUP DIV. PERGOLA S.r.l (ITALY)

Chromium plated valve except inlet thread

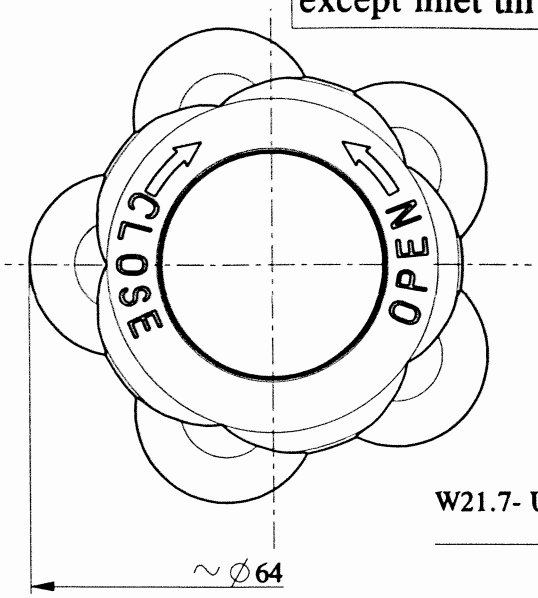


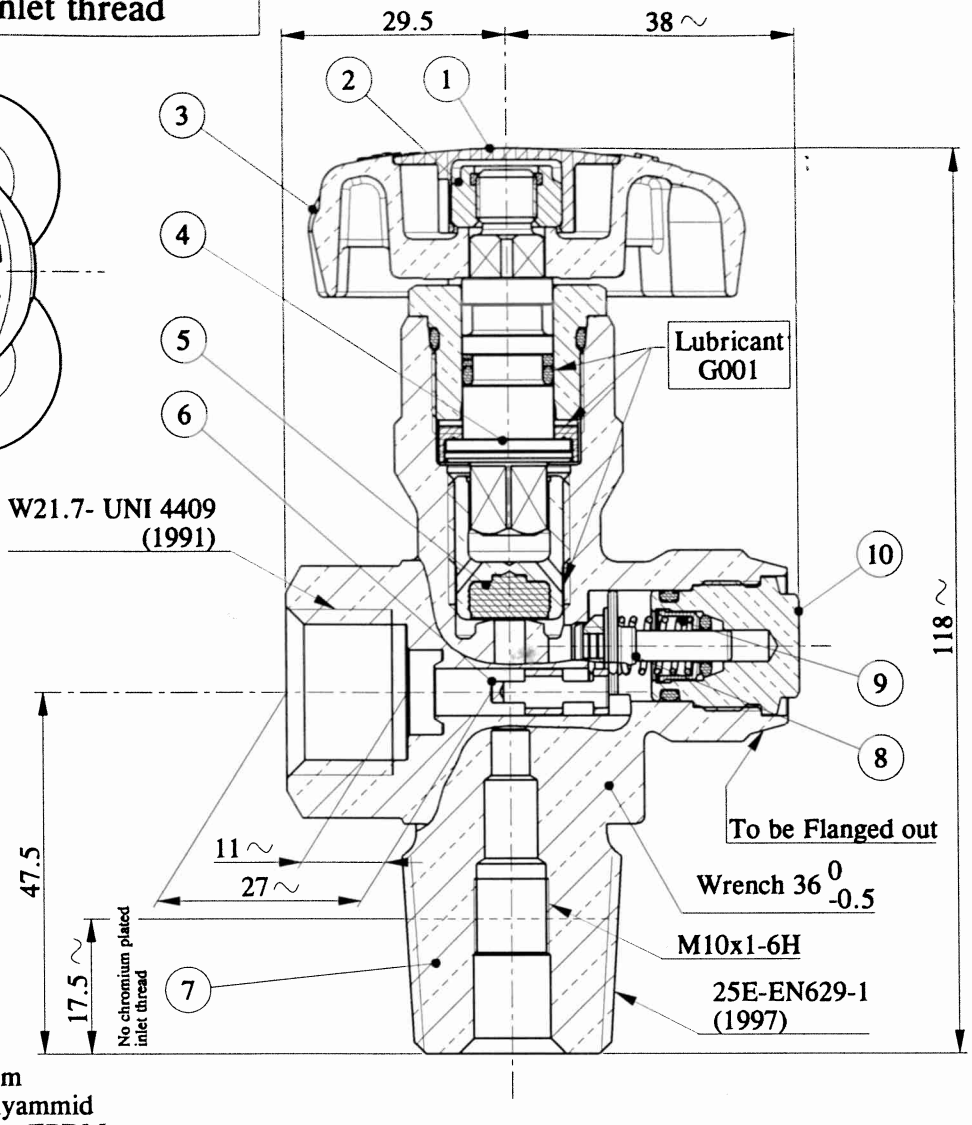


Markings:
- CAVAGNA GROUP symbol
- EU
- EN 849
- Month and two last figures of the year of costruction.
- $N_2$
- 25E
- .... (Production order)
- ⚠

Temperature Range: -20°/ +65°C
Residual Pressure valve: 1-4 bar
Gland Nut Closing Torque: 45-60 Nm
Pin Range: 4mm — Seat pad: Polyammid
Orifice: ∅4mm — Toroidal rings: EPDM
W.P.: 230 bar — Antifriction ring: DELRIN

| POS | DENOMINATION | Q. | MATERIAL | DRAW NR. |
|---|---|---|---|---|
| 10 | Assembled Ring nut | 1 | / | 1079500007 |
| 9 | Spring | 1 | Stainless steel AISI 302 | 0701100159 |
| 8 | Assembled piston | 1 | / | 0309500204 |
| 7 | Chromium plated Body | 1 | Cu Zn40 Pb2 (CW617N) UNI EN12165 | 0171680559 |
| 6 | Bush | 1 | Cu Zn39 Pb3 (CW614N) UNI EN12164 | 1571100043 |
| 5 | Assembled piston | 1 | / | 0379500029 |
| 4 | Assembled spindle | 1 | / | 1379500051 |
| 3 | Handwheel | 1 | EN AC-AlSi11Cu2(Fe) UNI EN 1706 | 0271103032 |
| 2 | Handwheel Nut | 1 | Zinc-coated Steel -6-th Class | 1071100047 |
| 1 | Protection cap blue | 1 | PA 6 | 1671101012 |

| | | | | | | |
|---|---|---|---|---|---|---|
| DESCRIPTION | Cylinder valve with non-refill and non-empting device for Nitrogen(N2) | | | | | |
| | RESPONS. | DRAWN | ISSUE | GEN. TOLL. ± / | ANG.TOL.±/° | SCALA 1:1 |
| | DATE | 22-06-04 | 22-06-04 | GEN. FILLET | SFORMO / | SHEET 1 di 1 |
| | SIGNATURE | Tosoni | Cazzago | MATERIAL | | |
| | PROJECT 1388 | REFERENCE AZRB002205 | HOMOLOGATION L.31.008 | RAW NR. - | / | |
| | MODIFY NUMBER | 0163 | WEIGHT kg 0.785 | REVISION 1A.. | DRAW NUMBER | |
| | MODIFY DATE | 06-08-04 | RELEASE LEVEL | - | VGE3RAZ005 | |
| | MODIFY SIGN. | | B work in progress | - | | |

cavagna group pergola