This is your final project title for the report and presentation

A Minor Project Report

submitted in partial fulfilment of the requirements for the award of

Diploma

in

Computer Engineering

of

State Board of Technical Education, Kerala

by

YOUR NAME (2301112345)

MEMBER 2 (2301112346)

MEMBER 3 (2301112347)

MEMBER 4 (2301112348)

Department of Computer Engineering
Government Polytechnic College, Mananthavady

2025-26

DEPARTMENT OF COMPUTER ENGINEERING
GOVERNMENT POLYTECHNIC COLLEGE
MANANTHAVADY

Certificate

03-03-2026

This is to certify that the minor project report entitled **This is your final project title for the report and presentation** *is a bonafide record of the work done by* **Your Name (2301112345)** *along with* MEMBER 2 (2301112346), MEMBER 3 (2301112347) *and* MEMBER 4 (2301112348) *under our guidance towards partial fulfillment of the requirements for the award of* **Diploma in Computer Engineering** *of the State Board of Technical Education, Government of Kerala during the year 2025-26.*

(Guide) *(Head of Department)* *(Co-ordinator)*

(Seal)

ACKNOWLEDGEMENTS

I express my sincere gratitude and thanks to **Mr. Biju M J**, Principal Govt. Polytechnic College, Mananthavady and **Mr. Karunakaran V N**, Head of the Computer Engineering Department for providing necessary facilities and their encouragement and support during the course of this project.

I owe special thanks to the project guide **Ms. Remitha N V**, Lecturer in Computer Engineering, coordinators **Mr. Amal Wilson**, Lecturer in Computer Engineering and **Ms. Aiswarya M**, Lecturer in Computer Engineering for their corrections, suggestions and sincere efforts to co-ordinate the project under a tight schedule.

I express my sincere thanks to all staff members in the Department of Computer Engineering who have taken sincere efforts in guiding and correcting me in conducting this project.

Next, I would like to acknowledge the heartfelt efforts, comments, criticisms, co-operation and tremendous support given to me by my dear friends during the project activities and also during the presentation without which this work would have been all the more difficult to accomplish.

Finally, I wish to thank my family and friends for their unwavering support and motivation, which kept me focused and driven to complete this report.

ABSTRACT

Give a brief description of your work and its relevance in selected area of work. Try to keep the content in one or two paragraphs never exceeding a page.

TABLE OF CONTENTS

ACKNOWLEDGEMENTS **i**

ABSTRACT **ii**

1 Introduction **1**

1.1 Overview 1

1.2 Background & Motivation 2

1.3 Problem Statement 2

1.4 Objectives 2

1.5 Methodology 2

1.6 Organization of the Report 3

2 Requirements Specifications **4**

2.1 Methodology 4

2.2 Hardware Requirements 4

2.3 Software Requirements 5

2.4 Functional Requirements 5

2.4.1 Requirement 1 5

2.4.2 Requirement 2 5

2.4.3 Requirement 3 5

2.5 Non Functional Requirements 5

2.5.1 Requirement 1 5

2.5.2 Requirement 2 5

2.5.3 Requirement 3 5

3 Design **6**

3.1 System architecture 6

3.2 Circuit Diagram/Schematic 6

3.3 Dataflow Diagrams 6

3.4 Database Design 6

3.5 UI/UX Designs 6

4 Implementation **7**

4.1 Module Descriptions and Interfaces 7

4.2 Core Algorithms 7

4.3 Challenges 7

5 Testing **8**

5.1 Test Scenarios 8

5.2 Test Cases and Results 8

5.3 Validation 8

6 Results and Analysis **9**

6.1 Screenshots 9

6.2 Performance Analysis 9

6.3 Comparison 10

6.4 Limitations 10

7 Conclusions and Future Scope **11**

7.1 Conclusion 11

7.2 Future Scope 11

REFERENCES **12**

A User Manuals **14**

B Datasheets of Components **15**

C Source Code 16

CHAPTER 1

Introduction

Give an overview of the topic in one or two paragraphs.

1.1 Overview

Brief summary of the project.

Lorem ipsum dolor sit amet, consectetur adipiscing elit. Etiam varius mauris massa, a sagittis purus vulputate et. Aenean egestas faucibus enim, non auctor nunc euismod quis. Sed finibus eget diam in dapibus. Nam lacinia ipsum sit amet libero cursus, vulputate tincidunt erat eleifend. Suspendisse malesuada neque in nibh laoreet, nec pulvinar urna maximus. Nullam faucibus urna a rutrum hendrerit. Pellentesque posuere ac quam ac ultrices. Cras aliquam dui quis ex mollis, a semper ex imperdiet. Nullam imperdiet vitae nunc a auctor. Duis sodales rutrum orci, at hendrerit erat tincidunt fermentum. In nec ornare nisi. Sed posuere urna suscipit ligula tristique, maximus imperdiet sapien sollicitudin. Vivamus ullamcorper elementum nisi, laoreet feugiat nisl.

Praesent commodo vestibulum odio, et elementum quam luctus vitae. Quisque pretium suscipit mauris sed auctor. Duis ullamcorper sed tortor ut commodo. Lorem ipsum dolor sit amet, consectetur adipiscing elit. Duis feugiat sapien vitae leo sodales finibus ac id felis. Sed pellentesque, mi ut lobortis vulputate, nisi magna

fringilla urna, non tincidunt neque velit ac tellus. Duis fermentum tincidunt velit at porta. Nullam augue dolor, congue nec nisl vitae, placerat mollis dui. Nunc faucibus id lectus vitae vestibulum. Aliquam posuere quam vitae mi gravida, et efficitur diam mollis.

1.2 Background & Motivation

Give reasons for the need of your project. Why this is needed, what was missing, what motivated you to do this project etc.

1.3 Problem Statement

State the problem here. Include what is missing, what are the problems due to that and son on, and what your project tries to solve.

1.4 Objectives

Clear, bulleted goals of your project work.

1. Design a ...
2. Develop a ...
3. Optimize the ...

1.5 Methodology

A brief mention of the tools/approach used and why did you choose them.

1.6 Organization of the Report

Briefly explain how the report is organized like, Chapter 2 explains the objectives, Chapter 3 discusses about the objectives ....

CHAPTER 2

Requirements Specifications

Specify the software requirement specifications

Lorem ipsum dolor sit amet, consectetur adipiscing elit. Etiam varius mauris massa, a sagittis purus vulputate et. Aenean egestas faucibus enim, non auctor nunc euismod quis. Sed finibus eget diam in dapibus. Nam lacinia ipsum sit amet libero cursus, vulputate tincidunt erat eleifend. Suspendisse malesuada neque in nibh laoreet, nec pulvinar urna maximus. Nullam faucibus urna a rutrum hendrerit. Pellentesque posuere ac quam ac ultrices. Cras aliquam dui quis ex mollis, a semper ex imperdiet. Nullam imperdiet vitae nunc a auctor. Duis sodales rutrum orci, at hendrerit erat tincidunt fermentum. In nec ornare nisi. Sed posuere urna suscipit ligula tristique, maximus imperdiet sapien sollicitudin. Vivamus ullamcorper elementum nisi, laoreet feugiat nisl.

2.1 Methodology

Specify the methods you used to collect and filter the requirements

2.2 Hardware Requirements

List of components (Microcontrollers, Sensors, Actuators).

2.3 Software Requirements

OS, IDEs (VS Code, Arduino IDE), Languages (C++, Python).

2.4 Functional Requirements

What the system must do.

2.4.1 Requirement 1

2.4.2 Requirement 2

2.4.3 Requirement 3

2.5 Non Functional Requirements

Reliability, power consumption, response time ...

2.5.1 Requirement 1

2.5.2 Requirement 2

2.5.3 Requirement 3

CHAPTER 3

Design

3.1 System architecture

3.2 Circuit Diagram/Schematic

3.3 Dataflow Diagrams

3.4 Database Design

3.5 UI/UX Designs

CHAPTER 4

Implementation

4.1 Module Descriptions and Interfaces

Description of parts of your code.

4.2 Core Algorithms

Explaination of the logic.

4.3 Challenges

Technical challenges faced during the project

CHAPTER 5

Testing

5.1 Test Scenarios

What are to be tested?

5.2 Test Cases and Results

A table showing test cases and their results.

No.	Input	Expected Result	Actual Result	Pass/Fail

5.3 Validation

Does the project meet the original objectives?

CHAPTER 6

Results and Analysis

6.1 Screenshots

This is how you will insert a figure. You can refer the figure like this. See Figure 6.1.

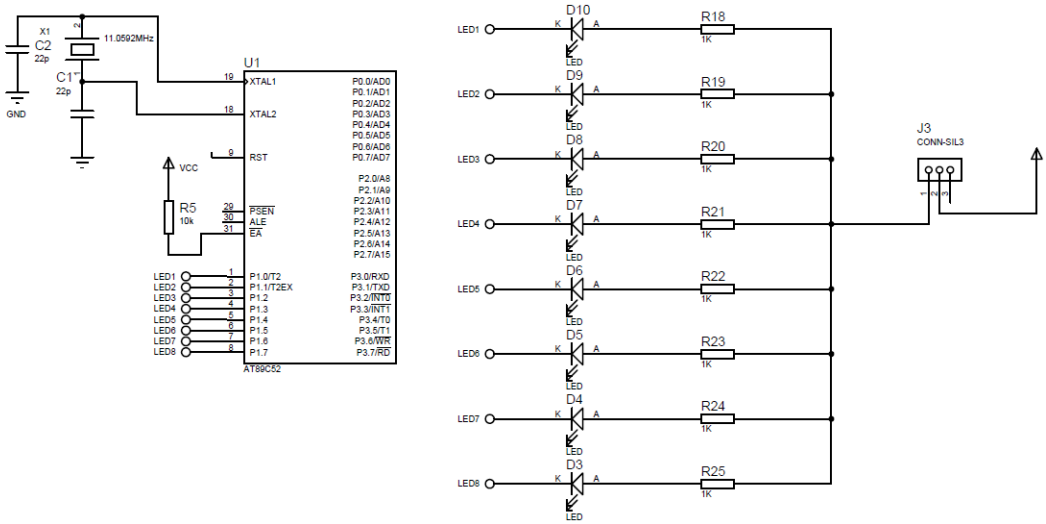

Figure 6.1: This is a sample figure

6.2 Performance Analysis

Response times, accuracy rates, or power efficiency.

6.3 Comparison

How your results compare to manual methods or existing tech.

6.4 Limitations

Honest look at what the system cannot do yet.

CHAPTER 7

Conclusions and Future Scope

7.1 Conclusion

7.2 Future Scope

REFERENCES

[1] J. Burroughs, "X-10 home automation using the pic16f877a," *Microchip Application notes on X-10 Home Automation Using the PIC16F877A*, vol. 1, no. AN236, pp. 1–26, 2010.

[2] K. Gill, S.-H. Yang, F. Yao, and X. Lu, "A zigbee-based home automation system," *Transactions on Consumer Electronics*, vol. 55, no. 2, pp. 422–430, 2009.

[3] H. Khan, Rafiqu, I. andDr Othman 0Khalifa, J. Omar, A. Hassan, and I. Adam, "Communication system for controlling smart appliances using power line communication," in *Information and Communication Technologies, 2006. ICTTA '06. 2nd*, pp. 2595 – 2600, IEEE, 2006.

[4] R. A. Rashid, M. A. Sarijari, M. R. A. Rahim, and T. Z. Yang, "Flood transmission based protocol for home automation system via power line communication," in *International Conference on Computer and Communication Engineering*, pp. 867 – 870, IEEE, 2008.

[5] B. S. Park, C. S. Kang, and E. J. Lim, "Automatic repeat protocol for distribution automation system through powerline communication," in *International Symposium on Power Line Communications and Its Applications,*, pp. 316 – 321, IEEE, 2008.

[6] J. Ahn, J. Heo, S. Lim, and W. Kim, "A study of iso/ieee1073 platform based on power line communication," in *Proceedings of 14th Asia-Pacific Conference on Communications,*, pp. 1 – 4, IEEE, 2008.

[7] A. T. Sherman, D. Phatak, B. Sonawane, and V. G. Relan, "Location authentication through power line communication: Design, protocol, and analysis of a new out-of-band strategy," in *International Symposium onPower Line Communications and Its Applications (ISPLC)*, pp. 279 – 284, IEEE, 2010.

[8] S. Eom, H.-M. Oh, T. Jeon, Y. Kim, J.-J. Lee, and S. C. andYoung Chai Ko, "Physical layer certification system of power line communication korea standard," in *International Symposium onPower Line Communications and Its Applications*, pp. 325 – 330, IEEE, 2009.

[9] C. D and J. T, "Narrowband, low data rate communications on the low-voltage mains in the cenelec frequencies. multiplicative signal fading and efficient modulation schemes," *Transactions on Power Delivery*, vol. 17, no. 3, pp. 724 – 729, 2002.

[10] R. S, A. M, and H. A, "Mv and lv powerline communications: new proposed iec standards," in *Transmission and Distribution Conference*, pp. 235 – 239, IEEE, 1999.

[11] C. V and S. N, "Effects of power lines on performance of home control system," in *International Conference on Power Electronics, Drives and Energy Systems*, pp. 1 – 6, IEEE, 2006.

APPENDIX A

User Manuals

Specify the user manuals for your project, Installation steps, Operating instructions and Troubleshooting (Common errors and fixes).

APPENDIX B

Datasheets of Components

Summarized specs of the main sensors/IC.

APPENDIX C

Source Code

The entire source code. Preferrably provide the Github link to your project.