The Izze-Racing Inertial Measurement Unit (IMU) measures acceleration and angular rate for all three orthogonal axes, and outputs data at up to 250Hz via CAN.

SENSOR SPECIFICATIONS

Acceleration Measurement Range	±2, ±4, ±8, ±16 g
Angular Rate Measurement Range	±125, ±250, ±500, ±1000, ±2000, ±4000 dps
Acceleration, Nonlinearity	< 0.5% FS
Acceleration, Thermal Drift	< 0.10 mG/˚C
Angular Rate, Nonlinearity	< 0.01% FS
Angular Rate, Thermal Drift	< 0.005 deg/˚C-s
Temperature, Resolution	0.1˚C
Temperature, Accuracy (typ)	±1.0˚C
Package Temperature Range	-20˚C to 125˚C
Sampling Rate / Filtering (ODR)	12, 26, 52, 104, 208, 416, 833, 1667, 3333, 6667Hz
Low-Pass Filter, Accelerometer	ODR / 2
Low-Pass Filter, Gyroscope	ODR / 3
Output Rate	12–250Hz, changes with ODR

ELECTRICAL SPECIFICATIONS

Supply Voltage, V_s	5 to 10 V, maximum of 16 V *
Supply Current, I_s (typ)	25 mA
Features	• Reverse polarity protection • Over-temperature protection (125˚C)

*Supply voltage is rated up to 16V DC, but transient voltages exceeding this may cause sensor to prematurely fail. Thus, battery voltage is not recommended.

MECHANICAL SPECIFICATIONS

Weight	10 g
L x W x H (max)	29 x 29 x 6.5 mm
Protection Rating	IP67

WIRING SPECIFICATIONS:

Wire	26 AWG M22759/32, DR25 jacket
Cable Length (typ.)	500 mm
Connector	None

Supply Voltage, V_s	Red	(twisted)
Ground	Black	
CAN +	Blue	(twisted)
CAN -	White	

© Izze-Racing 2025

CAN SPECIFICATIONS

Standard	CAN 2.0A (11-bit identifier), ISO-11898
Bit Rate	1 Mbit/s (default)
Byte Order	Big-Endian / Motorola
Data Conversion	0.1dps per bit, 0.01g per bit, 0.1˚C per bit, signed
CAN ID's (Default)	Angular Rate: 1260 (Dec) / 0x4EC (Hex) Acceleration: 1261 (Dec) / 0x4ED (Hex)
Termination	None

CAN ID: 0x4EC

Angular Rate, X-Axis		Angular Rate, Y-Axis		Angular Rate, Z-Axis		Unused	
Byte 0 (MSB)	Byte 1 (LSB)	Byte 2 (MSB)	Byte 3 (LSB)	Byte 4 (MSB)	Byte 5 (LSB)	Byte 6 (MSB)	Byte 7 (LSB)

CAN ID: 0x4ED

Acceleration, X-Axis		Acceleration, Y-Axis		Acceleration, Z-Axis		Temperature	
Byte 0 (MSB)	Byte 1 (LSB)	Byte 2 (MSB)	Byte 3 (LSB)	Byte 4 (MSB)	Byte 5 (LSB)	Byte 6 (MSB)	Byte 7 (LSB)

* The default CAN ID (0x4EC) is adjustable

BASE CAN ID PROGRAMMING – RECEIVER:

To modify the IMU's base CAN ID, gyro scale, accelerometer scale, sampling frequency, or bit rate, send the following CAN message at 1Hz for at least 10 seconds and then reset the IMU by disconnecting power for 5 seconds.

CAN ID = Base ID (Default = 0x4EC)

Programming Constant		New CAN Base ID (11-bit)		Gyro Scale	Accel Scale	Frequency/ODR	Bit Rate
Byte 0 (MSB)	Byte 1 (LSB)	Byte 2 (MSB)	Byte 3 (LSB)	Byte 4	Byte 5	Byte 6	Byte 7
30000 = 0x7530		1 = 0x001 ⋮ 2047 = 0x7FF		1 = +/- 125dps 2 = +/- 250dps 3 = +/- 500dps 4 = +/- 1000dps 5 = +/- 2000dps 6 = +/- 4000dps	1 = +/- 2G 2 = +/- 4G 3 = +/- 8G 4 = +/- 16G	1 = 12Hz 2 = 26Hz 3 = 52Hz 4 = 104Hz 5 = 208Hz 6 = 416Hz 7 = 833Hz 8 = 1667Hz 9 = 3333Hz 10 = 6667Hz	1 = 1 Mbit/s 2 = 500 kbit/s 3 = 250 kbit/s 4 = 125 kbit/s

CAN messages should only be sent to the IMU during the configuration sequence.
DO NOT continuously send CAN messages to the IMU.

© Izze-Racing 2025

DIMENSIONS:

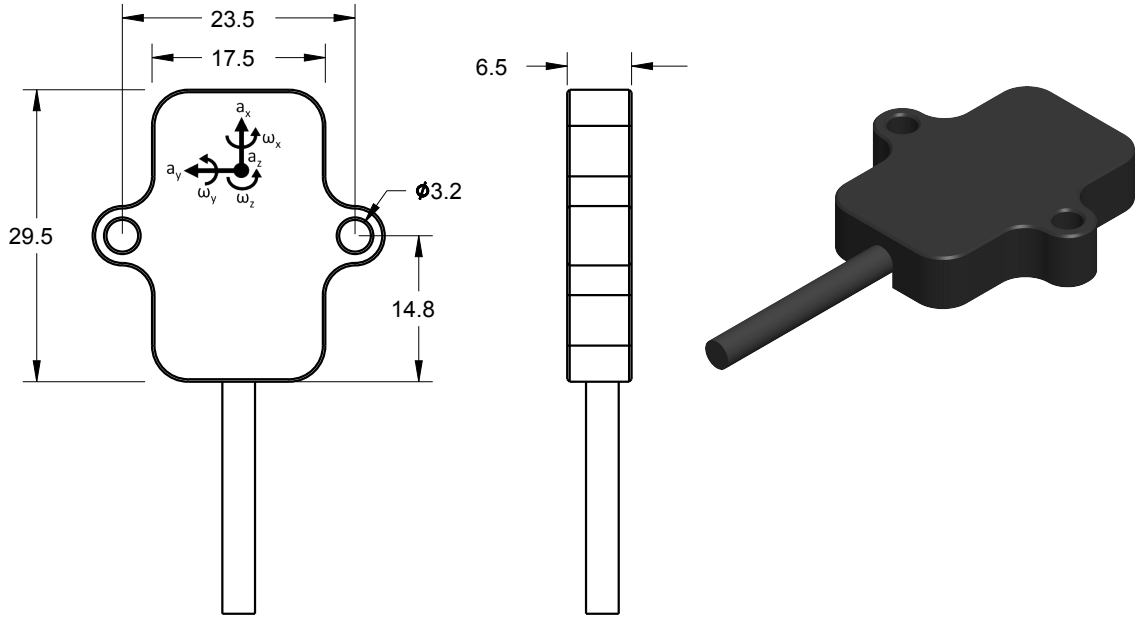

ADDITIONAL INFORMATION:

- Mount the IMU with Velcro or rubber bushings to attenuate chassis/engine vibrations (or use a lower ODR / sampling frequency)
    - For chassis inertial measurements, we recommend an ODR of 12-52Hz

© Izze-Racing 2025