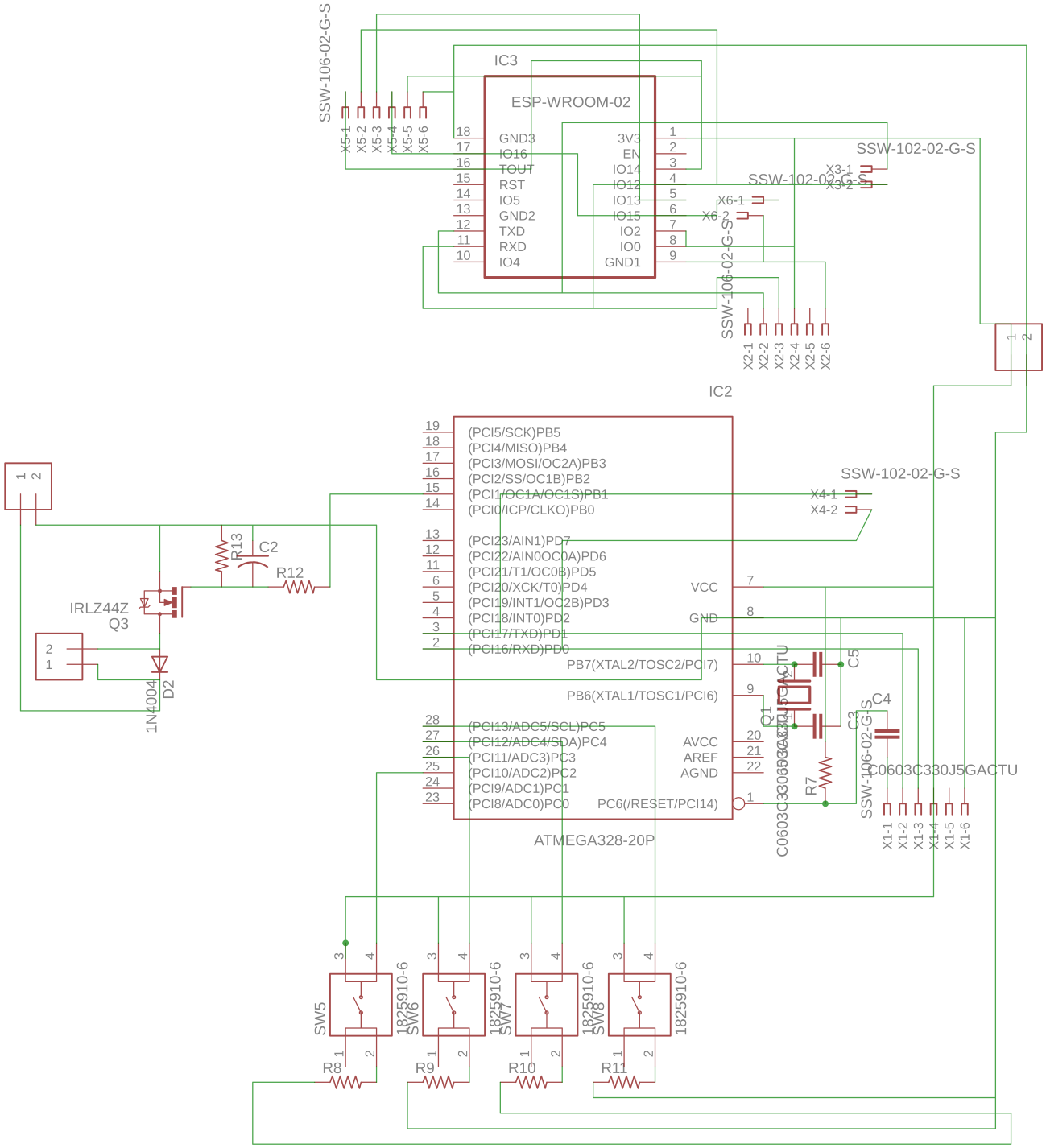
IC3
ESP-WROOM-02
GND3
IO16
TOUT
RST
IO5
GND2
TXD
RXD
IO4
3V3
EN
IO14
IO12
IO13
IO15
IO2
IO0
GND1
SSW-106-02-G-S
X5-1
X5-2
X5-3
X5-4
X5-5
X5-6
SSW-102-02-G-S
X3-1
X3-2
X6-1
X6-2
X2-1
X2-2
X2-3
X2-4
X2-5
X2-6
IC2
(PCI5/SCK)PB5
(PCI4/MISO)PB4
(PCI3/MOSI/OC2A)PB3
(PCI2/SS/OC1B)PB2
(PCI1/OC1A/OC1S)PB1
(PCI0/ICP/CLKO)PB0
(PCI23/AIN1)PD7
(PCI22/AIN0OC0A)PD6
(PCI21/T1/OC0B)PD5
(PCI20/XCK/T0)PD4
(PCI19/INT1/OC2B)PD3
(PCI18/INT0)PD2
(PCI17/TXD)PD1
(PCI16/RXD)PD0
PB7(XTAL2/TOSC2/PCI7)
PB6(XTAL1/TOSC1/PCI6)
(PCI13/ADC5/SCL)PC5
(PCI12/ADC4/SDA)PC4
(PCI11/ADC3)PC3
(PCI10/ADC2)PC2
(PCI9/ADC1)PC1
(PCI8/ADC0)PC0
PC6(/RESET/PCI14)
VCC
GND
AVCC
AREF
AGND
ATMEGA328-20P
X4-1
X4-2
C5
C4
C3
Q1
R7
C0603C330J5GACTU
X1-1
X1-2
X1-3
X1-4
X1-5
X1-6
IRLZ44Z
Q3
R13
C2
R12
1N4004
D2
SW5
SW6
SW7
SW8
1825910-6
R8
R9
R10
R11