JTAG boundary-scan test (BST) circuitry
Flexible Embedded Array Block (EAB); Flexible FastTrack Interconnect
Reconfigurable CMOS Static Ram-Based; MultiVolt I/O Interface Support
Configured upon power up with design stored in an Altera serial Eprom or provided by an external controller via JTAG ports.
Dedicated Carry Chain and Cascade Chain
Up to six Global Clock signals and four Global Clear signals
Individual Output Enable control and Open Drain option for each I/O pin
Peripheral Registers in the I/O block

Table 1. FLEX 10K Device Features

Feature	EPF10K10 EPF10K10A	EPF10K20	EPF10K30 EPF10K30A	EPF10K40	EPF10K50 EPF10K50V
Typical gates (logic and RAM), *Note (1)*	10,000	20,000	30,000	40,000	50,000
Usable gates	7,000 to 31,000	15,000 to 63,000	22,000 to 69,000	29,000 to 93,000	36,000 to 116,000
Logic elements (LEs)	576	1,152	1,728	2,304	2,880
Logic array blocks (LABs)	72	144	216	288	360
Embedded array blocks (EABs)	3	6	6	8	10
Total RAM bits	6,144	12,288	12,288	16,384	20,480
Maximum user I/O pins	134	189	246	189	310

Figure 1. FLEX 10K Device Block Diagram

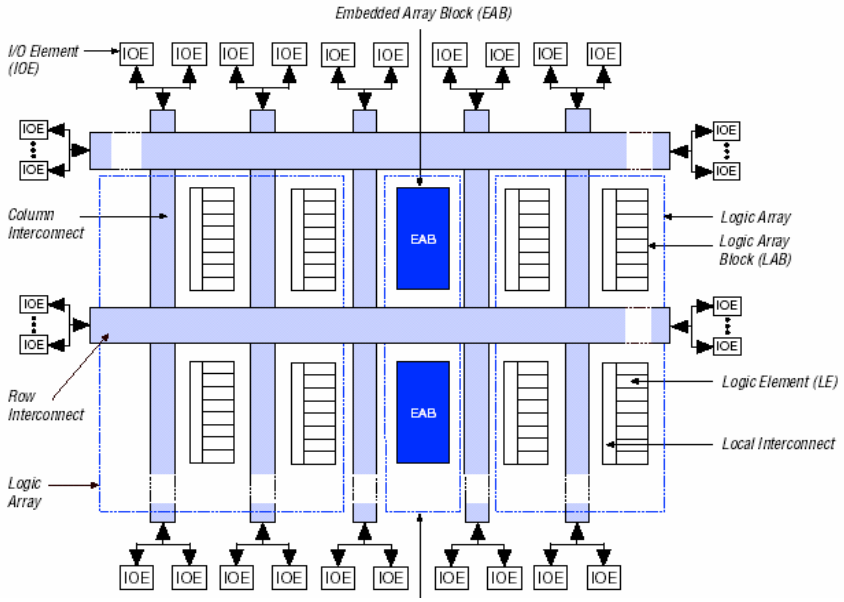

Figure 10. LE Clear & Preset Modes

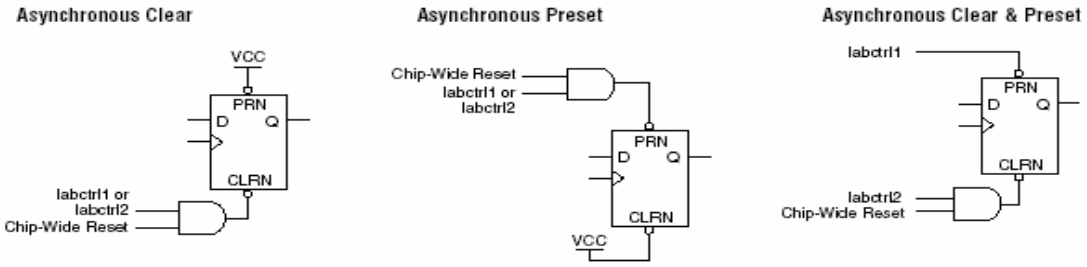

Figure 4. FLEX 10K Embedded Array Block

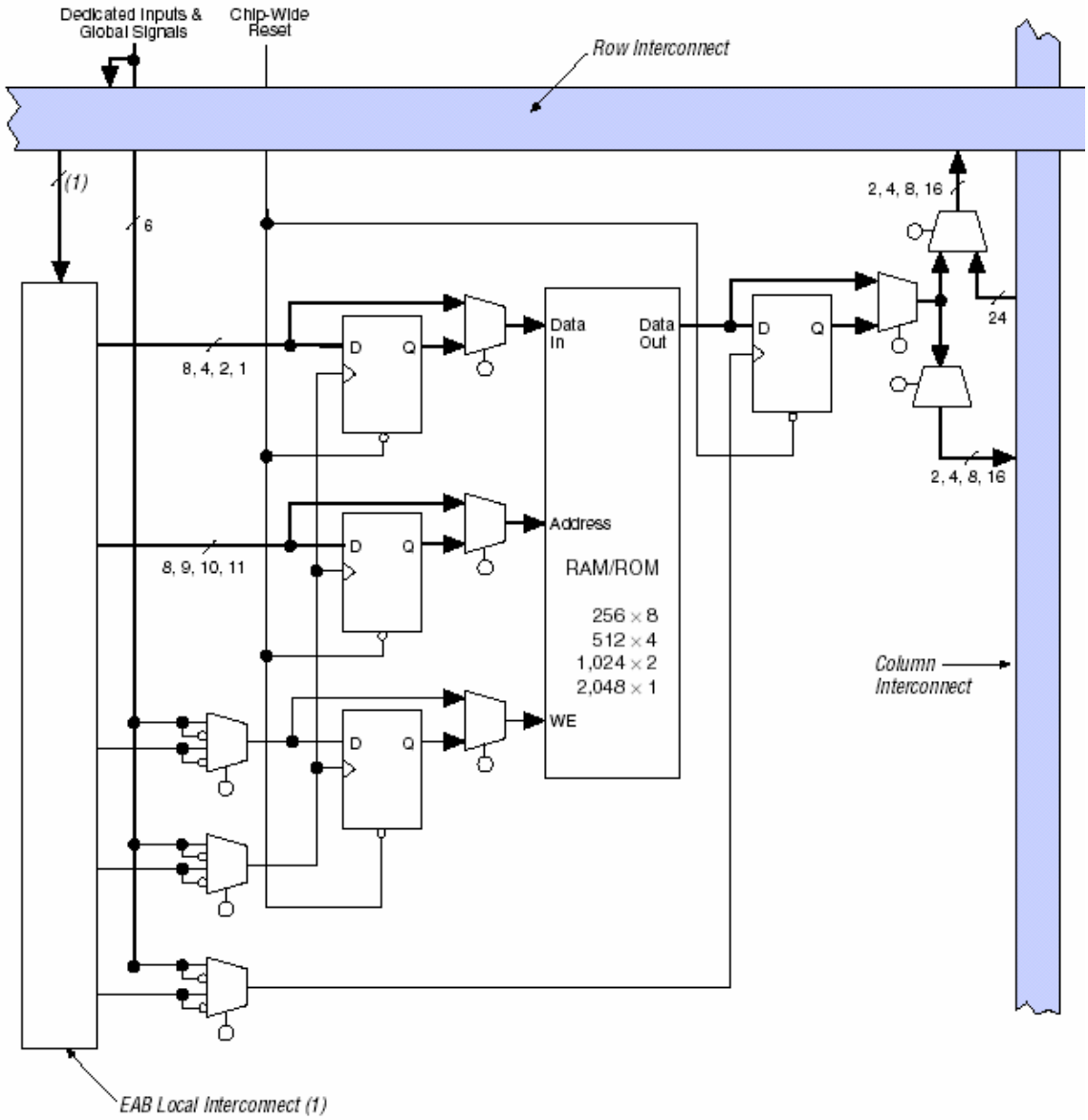

Figure 3. Examples of Combining EABs

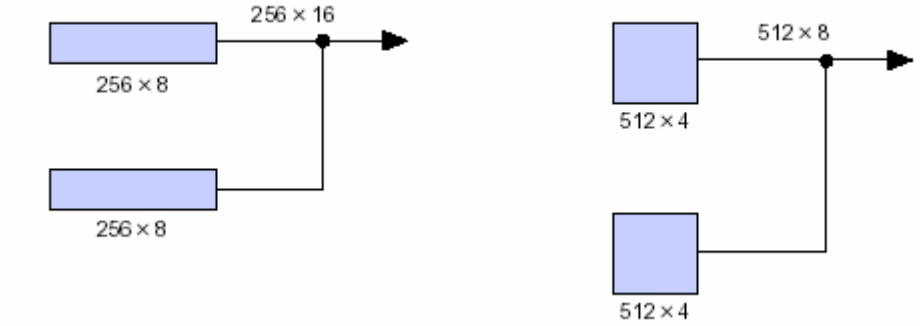

EABs can be cascaded to form RAM blocks of up to 2,048 words without impacting timing. Each EAB is fed by a row interconnect and can drive out up to 2 rows and 2 column interconnects.

Figure 5. FLEX 10K LAB

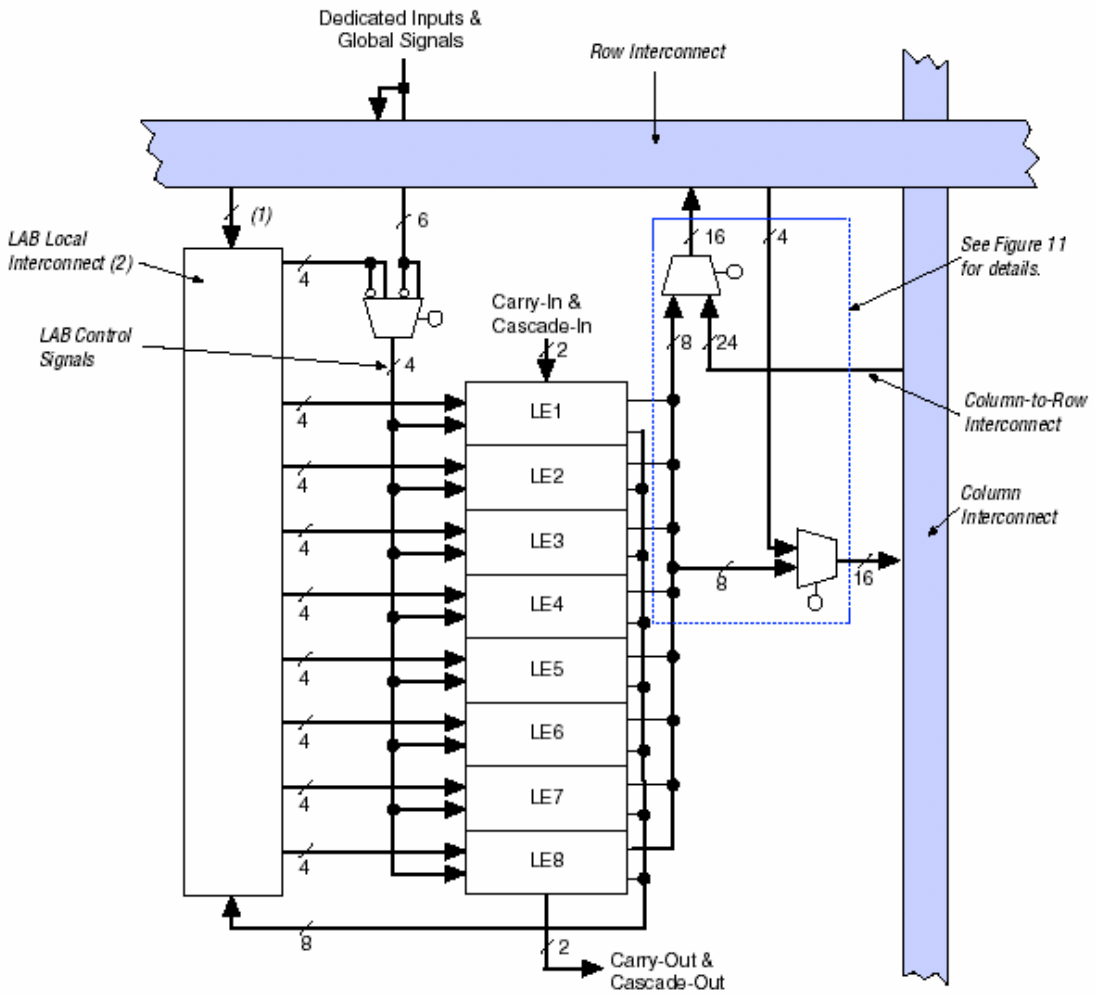

Figure 6. FLEX 10K Logic Element

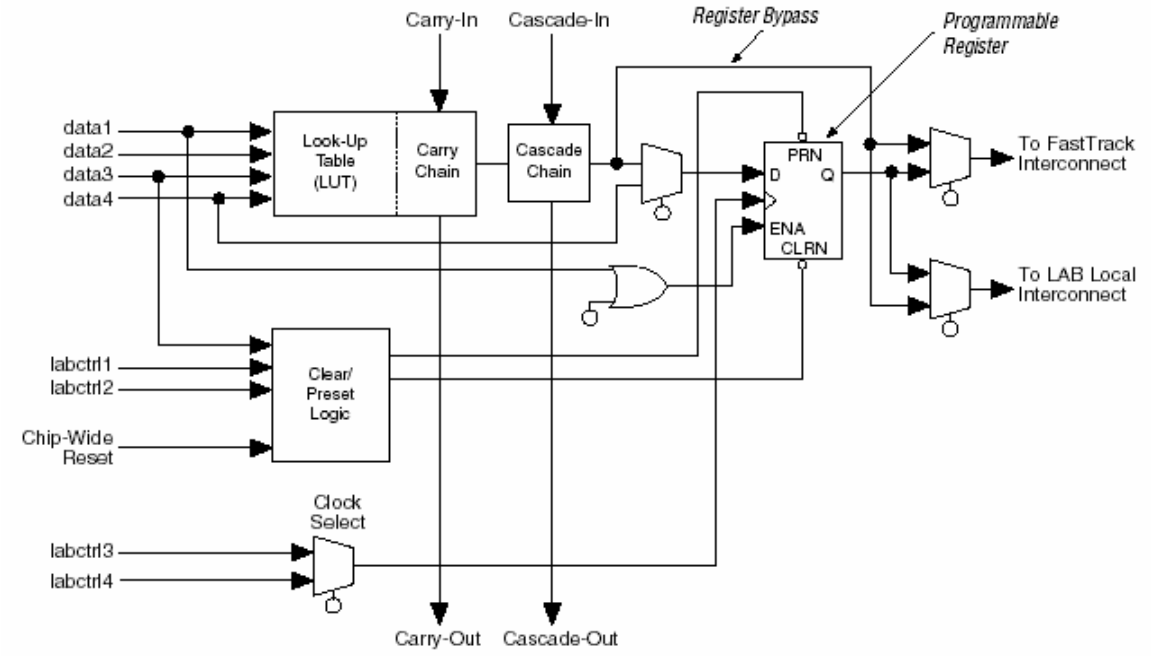

Figure 7. Carry Chain Operation (n-bit Full Adder)

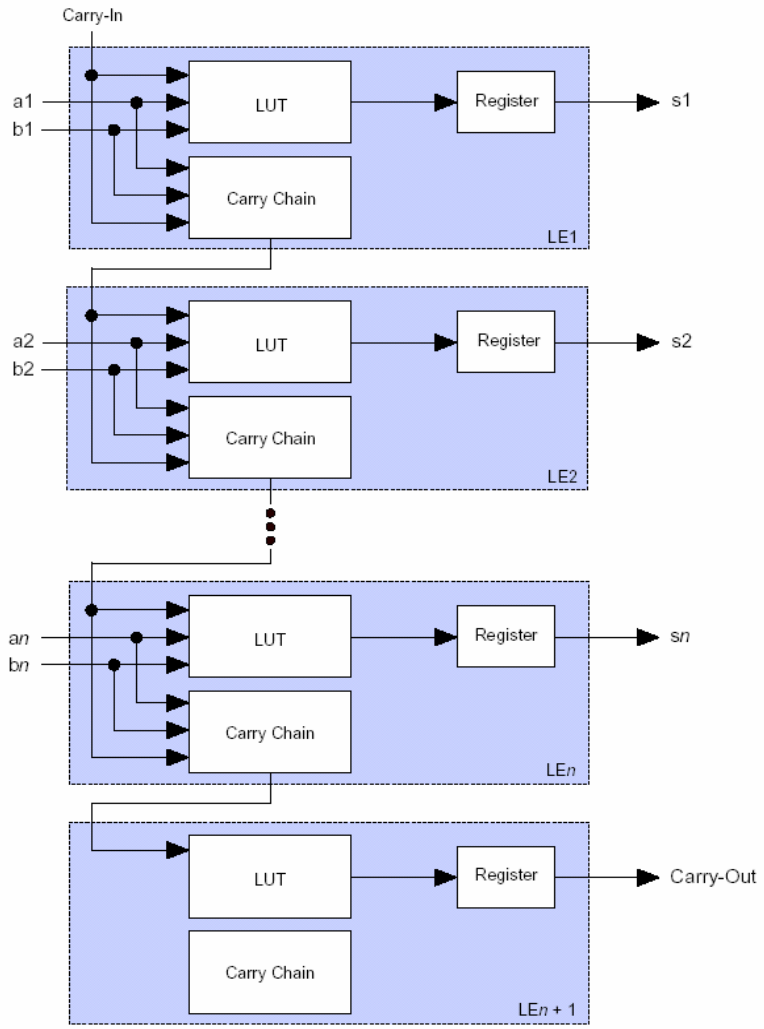

Figure 8. Cascade Chain Operation

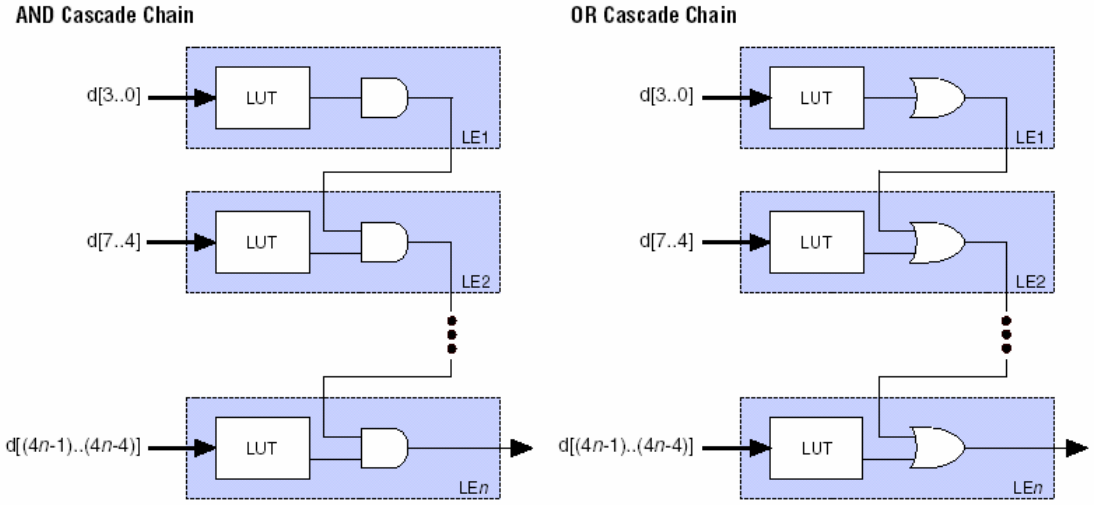

Figure 9. FLEX 10K LE Operating Modes

Normal Mode

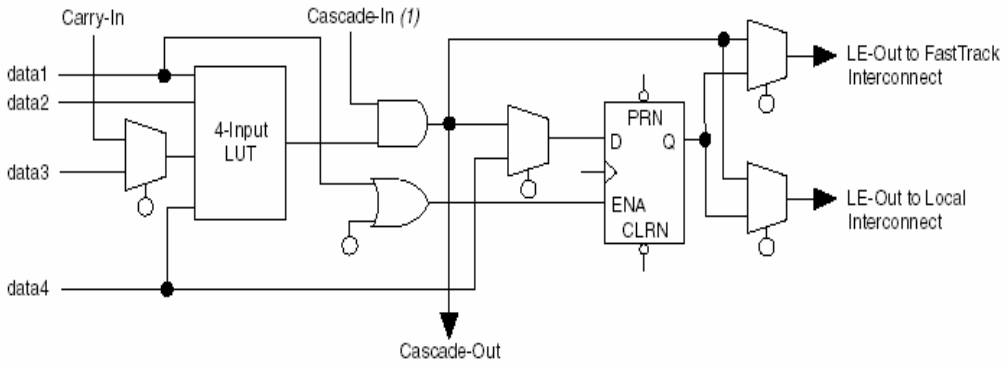

Arithmetic Mode

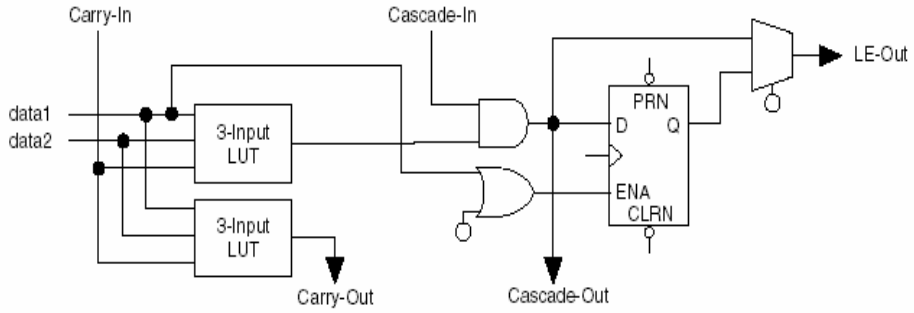

Up/Down Counter Mode

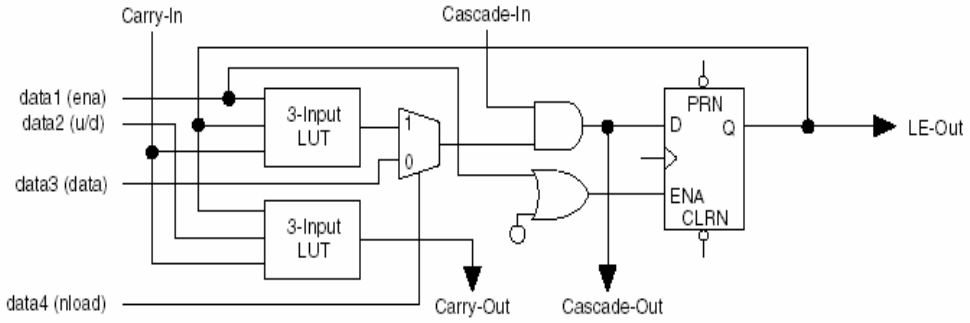

Clearable Counter Mode

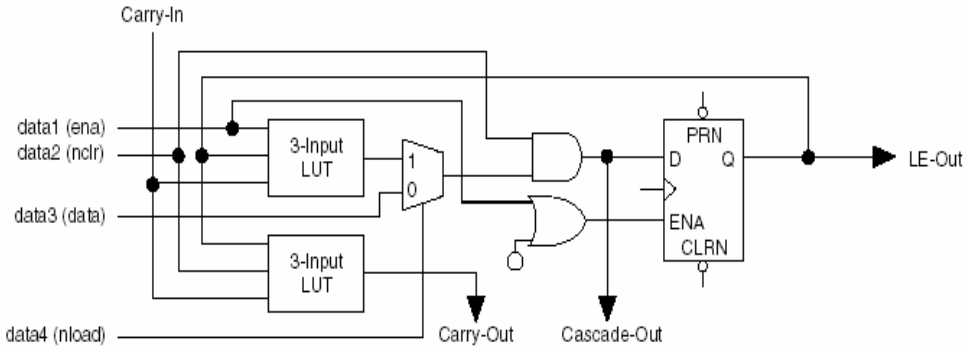

Figure 13. Bidirectional I/O Registers

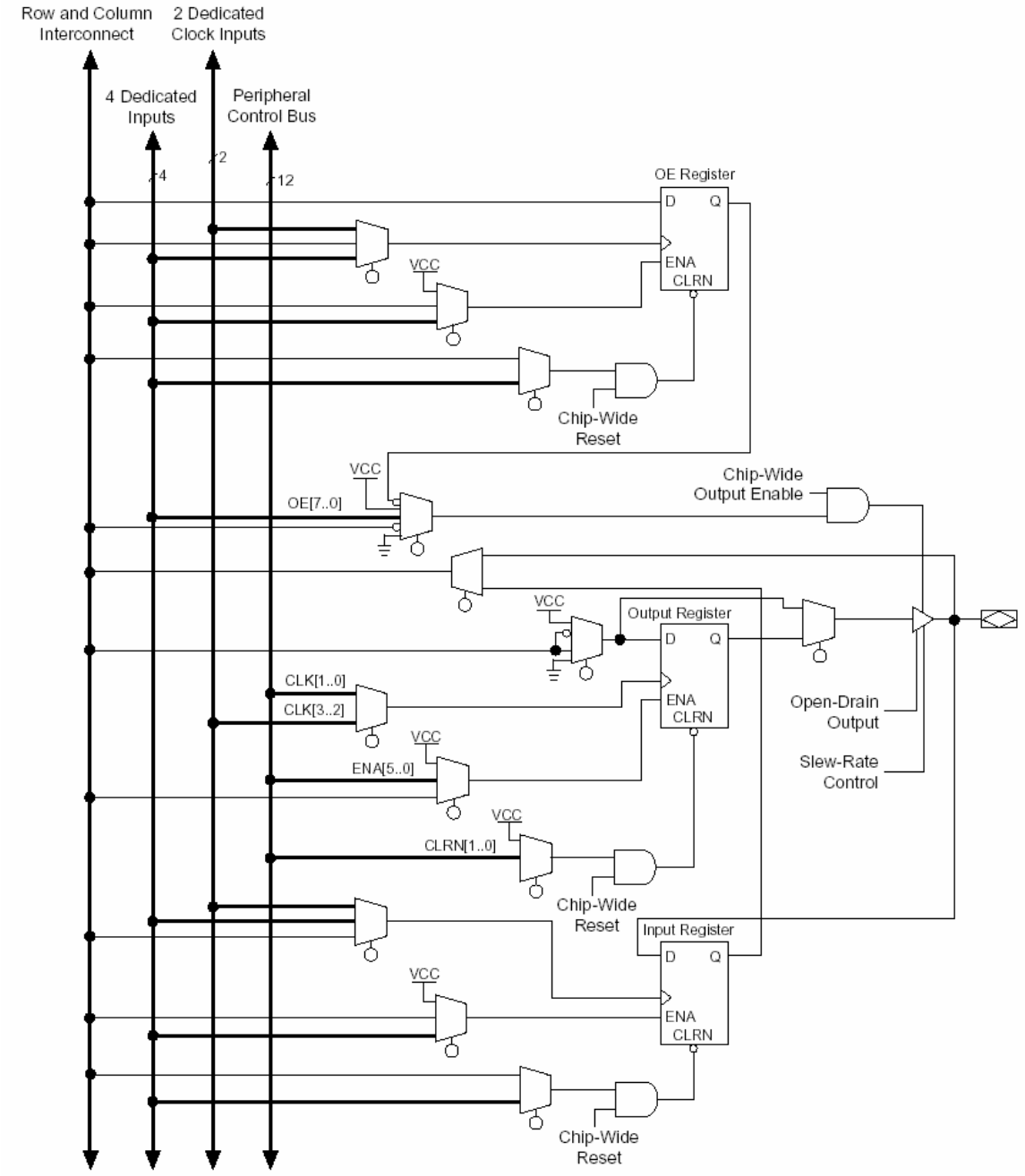

Figure 24. FLEX 10K Device Timing Model

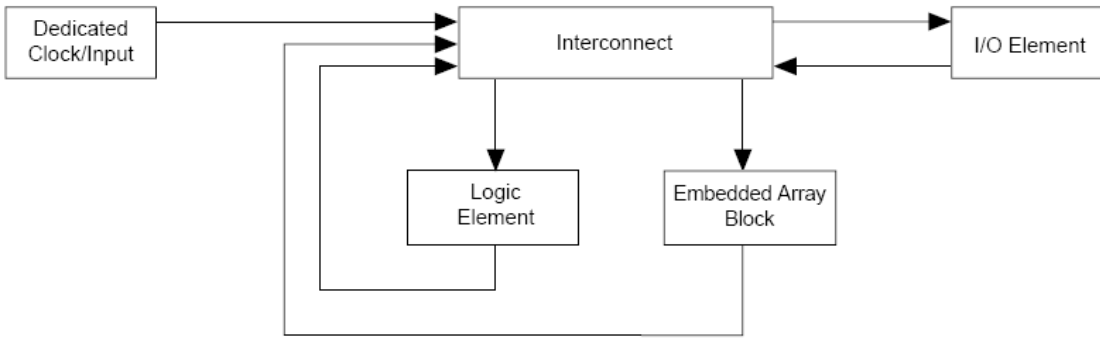

Figure 25. FLEX 10K Device LE Timing Model

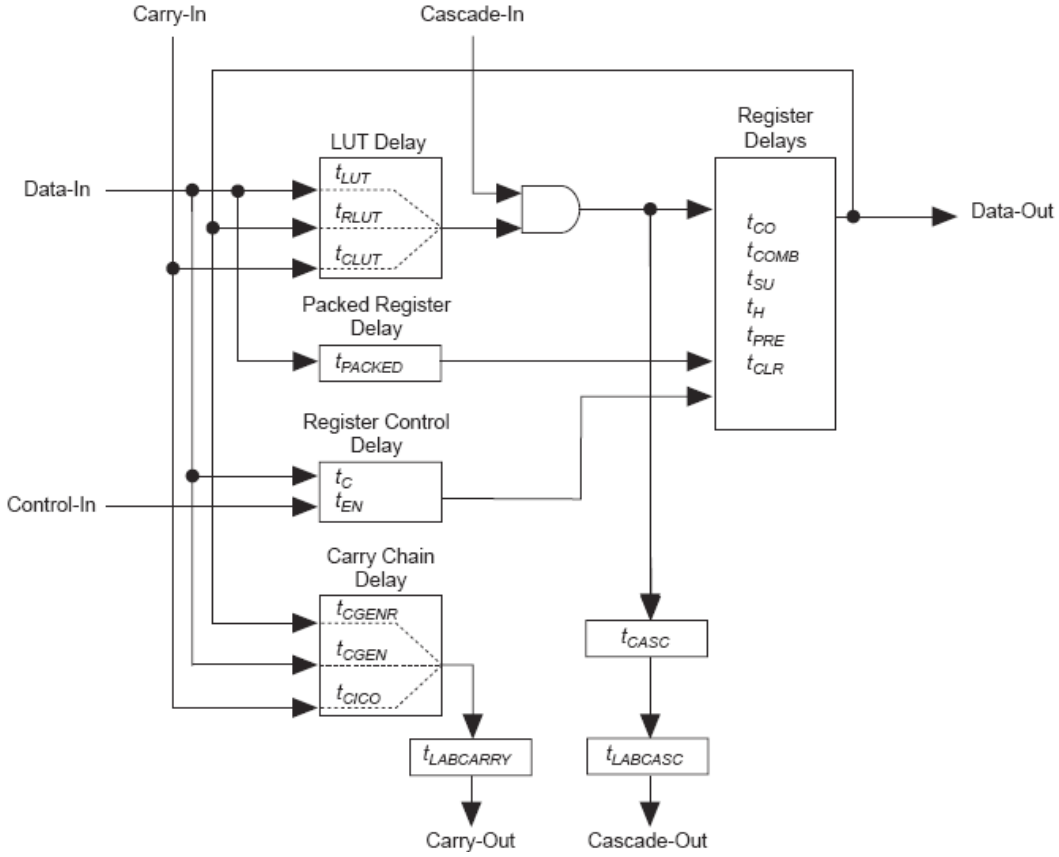

Figure 26. FLEX 10K Device IOE Timing Model

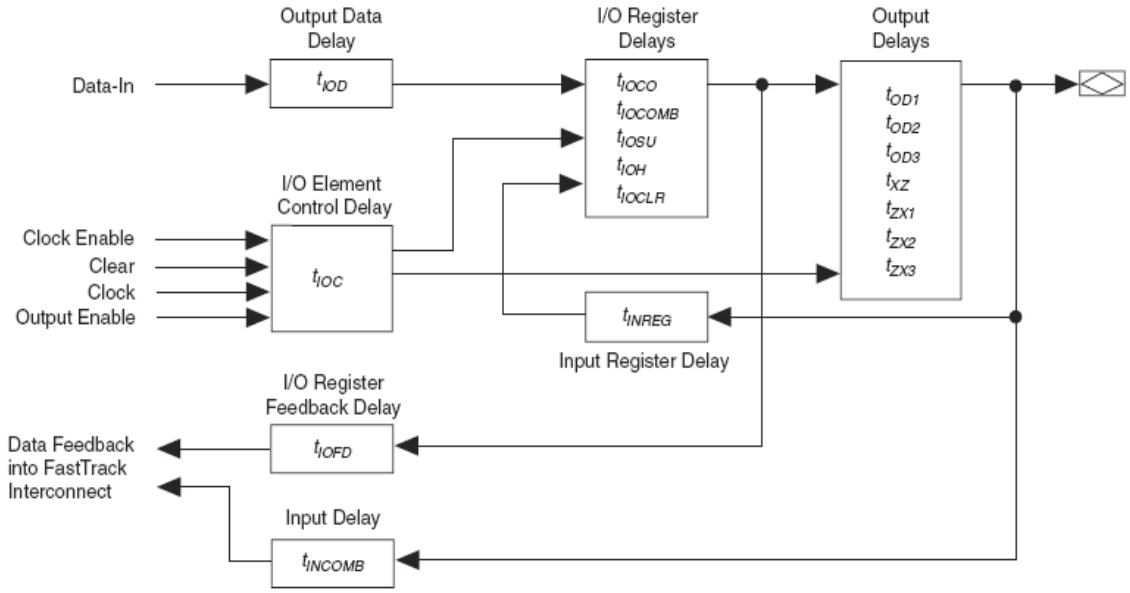

Figure 27. FLEX 10K Device EAB Timing Model

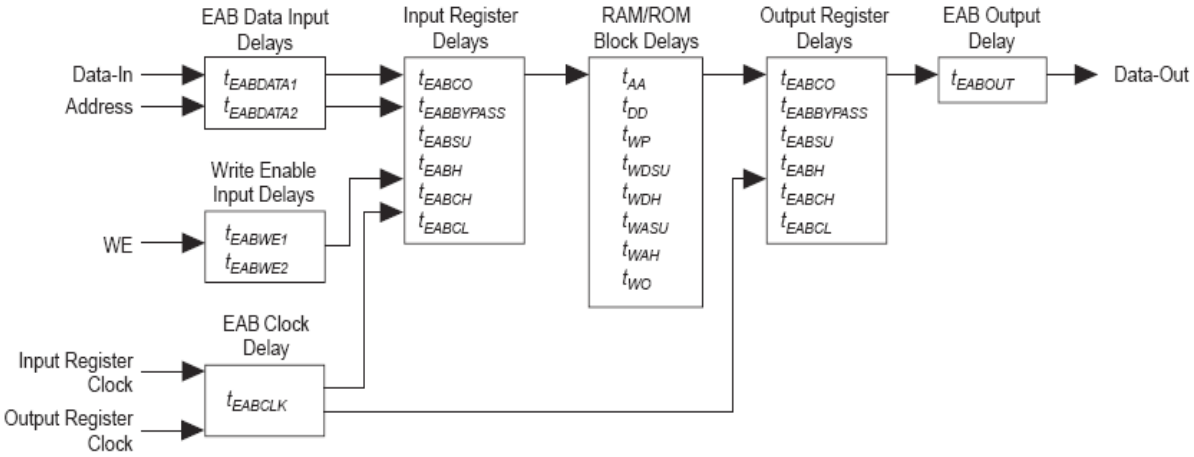

Table 32. LE Timing Microparameters (Part 1 of 2) *Note (1)*		
Symbol	**Parameter**	**Conditions**
t_{LUT}	LUT delay for data-in	
t_{CLUT}	LUT delay for carry-in	
t_{RLUT}	LUT delay for LE register feedback	
t_{PACKED}	Data-in to packed register delay	
t_{EN}	LE register enable delay	
t_{CICO}	Carry-in to carry-out delay	
t_{CGEN}	Data-in to carry-out delay	
t_{CGENR}	LE register feedback to carry-out delay	
t_{CASC}	Cascade-in to cascade-out delay	
t_{C}	LE register control signal delay	
t_{CO}	LE register clock-to-output delay	
t_{COMB}	Combinatorial delay	

Table 32. LE Timing Microparameters (Part 2 of 2) *Note (1)*		
Symbol	**Parameter**	**Conditions**
t_{SU}	LE register setup time for data and enable signals before clock; LE register recovery time after asynchronous clear, preset, or load	
t_{H}	LE register hold time for data and enable signals after clock	
t_{PRE}	LE register preset delay	
t_{CLR}	LE register clear delay	
t_{CH}	Minimum clock high time from clock pin	
t_{CL}	Minimum clock low time from clock pin	

Table 33. IOE Timing Microparameters *Note (1)*		
Symbol	**Parameter**	**Conditions**
t_{IOD}	IOE data delay	
t_{IOC}	IOE register control signal delay	
t_{IOCO}	IOE register clock-to-output delay	
t_{IOCOMB}	IOE combinatorial delay	
t_{IOSU}	IOE register setup time for data and enable signals before clock; IOE register recovery time after asynchronous clear	
t_{IOH}	IOE register hold time for data and enable signals after clock	
t_{IOCLR}	IOE register clear time	
t_{OD1}	Output buffer and pad delay, slow slew rate = off, $V_{CCIO} = V_{CCINT}$	C1 = 35 pF *(2)*
t_{OD2}	Output buffer and pad delay, slow slew rate = off, V_{CCIO} = low voltage	C1 = 35 pF *(3)*
t_{OD3}	Output buffer and pad delay, slow slew rate = on	C1 = 35 pF *(4)*
t_{XZ}	IOE output buffer disable delay	
t_{ZX1}	IOE output buffer enable delay, slow slew rate = off, $V_{CCIO} = V_{CCINT}$	C1 = 35 pF *(2)*
t_{ZX2}	IOE output buffer enable delay, slow slew rate = off, V_{CCIO} = low voltage	C1 = 35 pF *(3)*
t_{ZX3}	IOE output buffer enable delay, slow slew rate = on	C1 = 35 pF *(4)*
t_{INREG}	IOE input pad and buffer to IOE register delay	
t_{IOFD}	IOE register feedback delay	
t_{INCOMB}	IOE input pad and buffer to FastTrack Interconnect delay	

Table 34. EAB Timing Microparameters *Note (1)*		
Symbol	**Parameter**	**Conditions**
$t_{EABDATA1}$	Data or address delay to EAB for combinatorial input	
$t_{EABDATA2}$	Data or address delay to EAB for registered input	
t_{EABWE1}	Write enable delay to EAB for combinatorial input	
t_{EABWE2}	Write enable delay to EAB for registered input	
t_{EABCLK}	EAB register clock delay	
t_{EABCO}	EAB register clock-to-output delay	
$t_{EABBYPASS}$	Bypass register delay	
t_{EABSU}	EAB register setup time before clock	
t_{EABH}	EAB register hold time after clock	
t_{AA}	Address access delay	
t_{WP}	Write pulse width	
t_{WDSU}	Data setup time before falling edge of write pulse	*(5)*
t_{WDH}	Data hold time after falling edge of write pulse	*(5)*
t_{WASU}	Address setup time before rising edge of write pulse	*(5)*
t_{WAH}	Address hold time after falling edge of write pulse	*(5)*
t_{WO}	Write enable to data output valid delay	
t_{DD}	Data-in to data-out valid delay	
t_{EABOUT}	Data-out delay	
t_{EABCH}	Clock high time	
t_{EABCL}	Clock low time	

Table 35. EAB Timing Macroparameters *Notes (1), (6)*

Symbol	Parameter	Conditions
t_{EABAA}	EAB address access delay	
$t_{EABRCCOMB}$	EAB asynchronous read cycle time	
$t_{EABRCREG}$	EAB synchronous read cycle time	
t_{EABWP}	EAB write pulse width	
$t_{EABWCCOMB}$	EAB asynchronous write cycle time	
$t_{EABWCREG}$	EAB synchronous write cycle time	
t_{EABDD}	EAB data-in to data-out valid delay	
$t_{EABDATACO}$	EAB clock-to-output delay when using output registers	
$t_{EABDATASU}$	EAB data/address setup time before clock when using input register	
$t_{EABDATAH}$	EAB data/address hold time after clock when using input register	
$t_{EABWESU}$	EAB `WE` setup time before clock when using input register	
t_{EABWEH}	EAB `WE` hold time after clock when using input register	
$t_{EABWDSU}$	EAB data setup time before falling edge of write pulse when not using input registers	
t_{EABWDH}	EAB data hold time after falling edge of write pulse when not using input registers	
$t_{EABWASU}$	EAB address setup time before rising edge of write pulse when not using input registers	
t_{EABWAH}	EAB address hold time after falling edge of write pulse when not using input registers	
t_{EABWO}	EAB write enable to data output valid delay	

Table 39. EPF10K10 & EPF10K20 Device LE Timing Microparameters *Note (1)*

Symbol	-3 Speed Grade		-4 Speed Grade		Unit
	Min	Max	Min	Max	
t_{LUT}		1.4		1.7	ns
t_{CLUT}		0.6		0.7	ns
t_{RLUT}		1.5		1.9	ns
t_{PACKED}		0.6		0.9	ns
t_{EN}		1.0		1.2	ns
t_{CICO}		0.2		0.3	ns
t_{CGEN}		0.9		1.2	ns
t_{CGENR}		0.9		1.2	ns
t_{CASC}		0.8		0.9	ns
t_{C}		1.3		1.5	ns
t_{CO}		0.9		1.1	ns
t_{COMB}		0.5		0.6	ns
t_{SU}	1.3		2.5		ns
t_{H}	1.4		1.6		ns
t_{PRE}		1.0		1.2	ns
t_{CLR}		1.0		1.2	ns
t_{CH}	4.0		4.0		ns
t_{CL}	4.0		4.0		ns

Table 40. EPF10K10 & EPF10K20 Device IOE Timing Microparameters *Note (1)*

Symbol	-3 Speed Grade		-4 Speed Grade		Unit
	Min	Max	Min	Max	
t_{IOD}		1.3		1.6	ns
t_{IOC}		0.5		0.7	ns
t_{IOCO}		0.2		0.2	ns
t_{IOCOMB}		0.0		0.0	ns
t_{IOSU}	2.8		3.2		ns
t_{IOH}	1.0		1.2		ns
t_{IOCLR}		1.0		1.2	ns
t_{OD1}		2.6		3.5	ns
t_{OD2}		4.9		6.4	ns
t_{OD3}		6.3		8.2	ns
t_{XZ}		4.5		5.4	ns
t_{ZX1}		4.5		5.4	ns
t_{ZX2}		6.8		8.3	ns
t_{ZX3}		8.2		10.1	ns
t_{INREG}		6.0		7.5	ns
t_{IOFD}		3.1		3.5	ns
t_{INCOMB}		3.1		3.5	ns

Table 41. EPF10K10 & EPF10K20 Device EAB Internal Microparameters *Note (1)*

Symbol	-3 Speed Grade		-4 Speed Grade		Unit
	Min	Max	Min	Max	
$t_{EABDATA1}$		1.5		1.9	ns
$t_{EABDATA2}$		4.8		6.0	ns
t_{EABWE1}		1.0		1.2	ns
t_{EABWE2}		5.0		6.2	ns
t_{EABCLK}		1.0		2.2	ns
t_{EABCO}		0.5		0.6	ns
$t_{EABBYPASS}$		1.5		1.9	ns
t_{EABSU}	1.5		1.8		ns
t_{EABH}	2.0		2.5		ns
t_{AA}		8.7		10.7	ns
t_{WP}	5.8		7.2		ns
t_{WDSU}	1.6		2.0		ns
t_{WDH}	0.3		0.4		ns
t_{WASU}	0.5		0.6		ns
t_{WAH}	1.0		1.2		ns
t_{WO}		5.0		6.2	ns
t_{DD}		5.0		6.2	ns
t_{EABOUT}		0.5		0.6	ns
t_{EABCH}	4.0		4.0		ns
t_{EABCL}	5.8		7.2		ns

Table 42. EPF10K10 & EPF10K20 Device EAB Internal Timing Macroparameters *Note (1)*

Symbol	-3 Speed Grade		-4 Speed Grade		Unit
	Min	Max	Min	Max	
t_{EABAA}		13.7		17.0	ns
$t_{EABRCCOMB}$	13.7		17.0		ns
$t_{EABRCREG}$	9.7		11.9		ns
t_{EABWP}	5.8		7.2		ns
$t_{EABWCCOMB}$	7.3		9.0		ns
$t_{EABWCREG}$	13.0		16.0		ns
t_{EABDD}		10.0		12.5	ns
$t_{EABDATACO}$		2.0		3.4	ns
$t_{EABDATASU}$	5.3		5.6		ns
$t_{EABDATAH}$	0.0		0.0		ns
$t_{EABWESU}$	5.5		5.8		ns
t_{EABWEH}	0.0		0.0		ns
$t_{EABWDSU}$	5.5		5.8		ns
t_{EABWDH}	0.0		0.0		ns
$t_{EABWASU}$	2.1		2.7		ns
t_{EABWAH}	0.0		0.0		ns
t_{EABWO}		9.5		11.8	ns

Table 44. EPF10K20 Device Interconnect Timing Microparameters *Note (1)*

Symbol	-3 Speed Grade		-4 Speed Grade		Unit
	Min	Max	Min	Max	
$t_{DIN2IOE}$		5.2		6.6	ns
t_{DIN2LE}		2.6		3.8	ns
$t_{DIN2DATA}$		4.3		5.2	ns
$t_{DCLK2IOE}$		4.3		4.0	ns
$t_{DCLK2LE}$		2.6		3.8	ns
$t_{SAMELAB}$		0.6		0.6	ns
$t_{SAMEROW}$		3.7		3.9	ns
$t_{SAMECOLUMN}$		1.4		1.6	ns
$t_{DIFFROW}$		5.1		5.5	ns
$t_{TWOROWS}$		8.8		9.4	ns
$t_{LEPERIPH}$		4.7		5.6	ns
$t_{LABCARRY}$		0.5		0.8	ns
$t_{LABCASC}$		2.7		3.0	ns