MAX5000 Multiple Array Matrix Programmable Logic

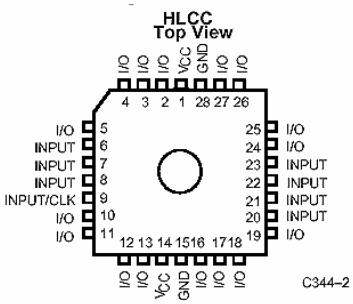

- CMOS EPROM (OTP ROM) based
- Programmable security bit for propriety design protection
- Programmable registers with individual clock, clear, and preset controls.
- Configurable expander product term distribution allowing more than 32 product terms in one macrocell.

Table 1. MAX 5000 Device Features

Feature	EPM5032	EPM5064	EPM5128	EPM5130	EPM5192
Usable gates	600	1,250	2,500	2,500	3,750
Macrocells	32	64	128	128	192
Logic array blocks (LABs)	1	4	8	8	12
Expanders	64	128	256	256	384
Routing	Global	PIA	PIA	PIA	PIA
Maximum user I/O pins	24	36	60	68, 84	72
t_{PD} (ns) Propagation Delay	15	25	25	25	25
t_{ASU} (ns) Array Clock Setup	4	4	4	4	4
t_{CO} (ns) Global Clock Output	10	14	14	14	14
f_{CNT} (MHz) Global Clock	76.9	50	50	50	50

Figure 1. MAX 5000 Architecture

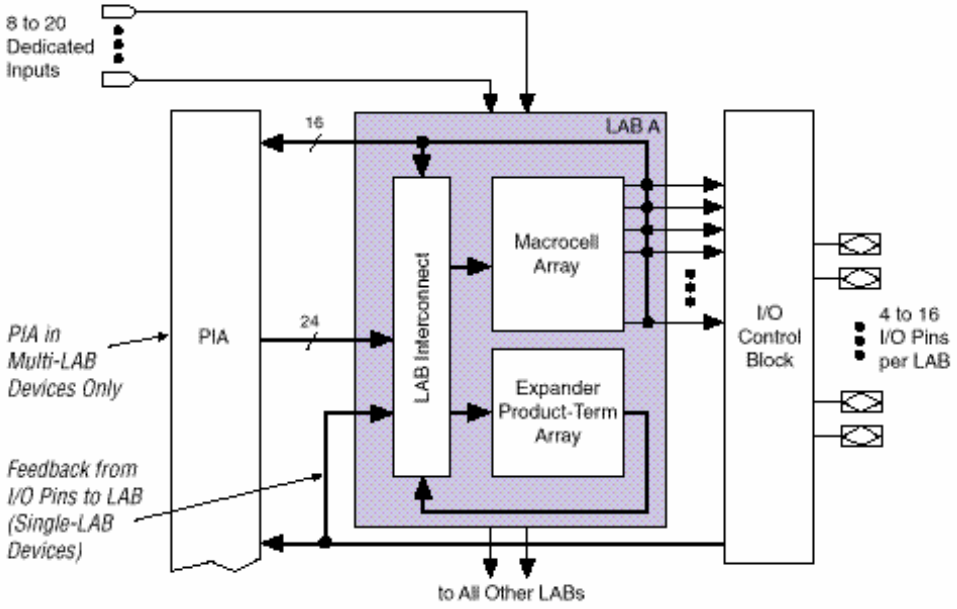

Figure 2. MAX 5000 Device Macrocell

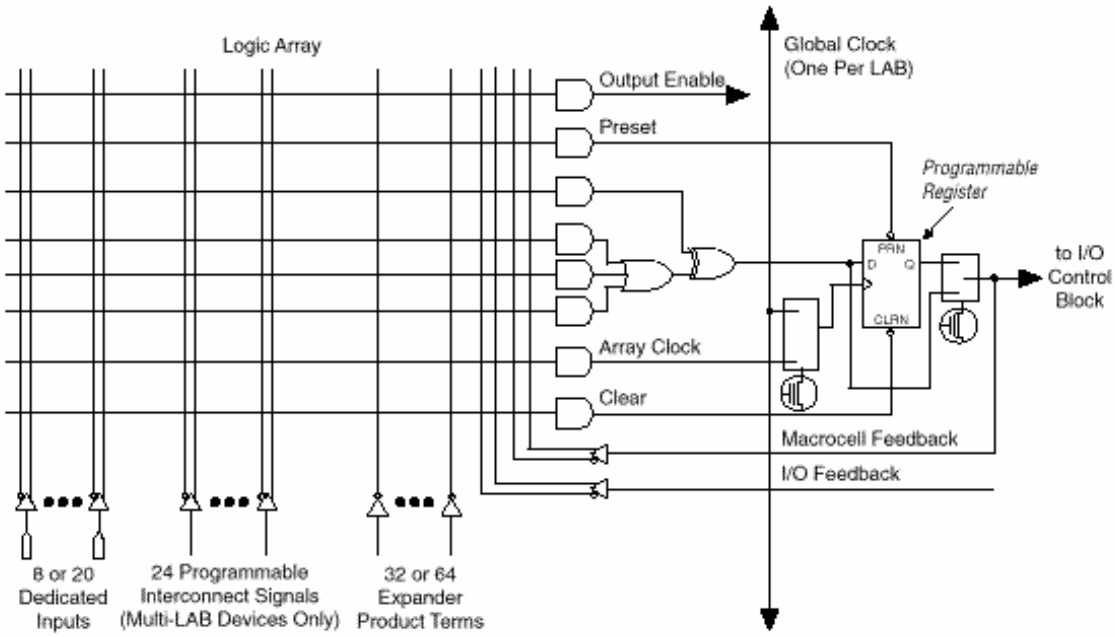

Figure 3. Expander Product Terms

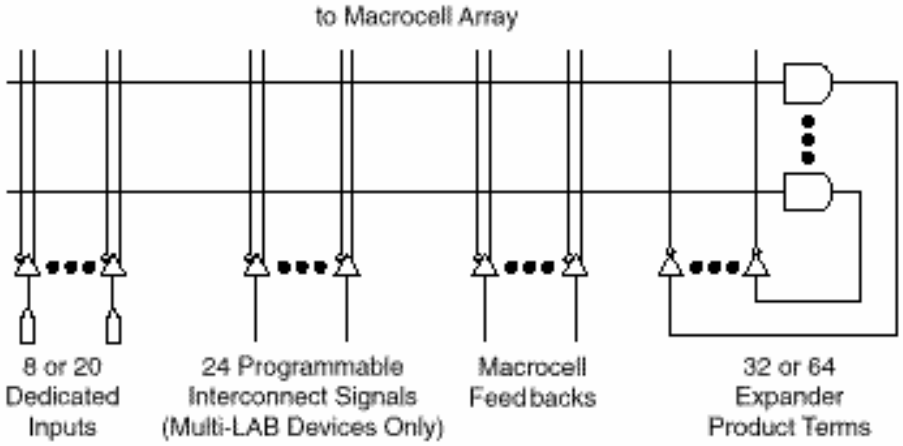

Figure 4. I/O Control Block

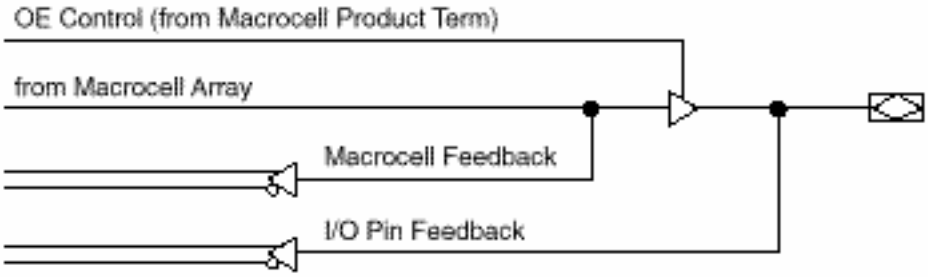

Max5000

Single-LAB EPLDs

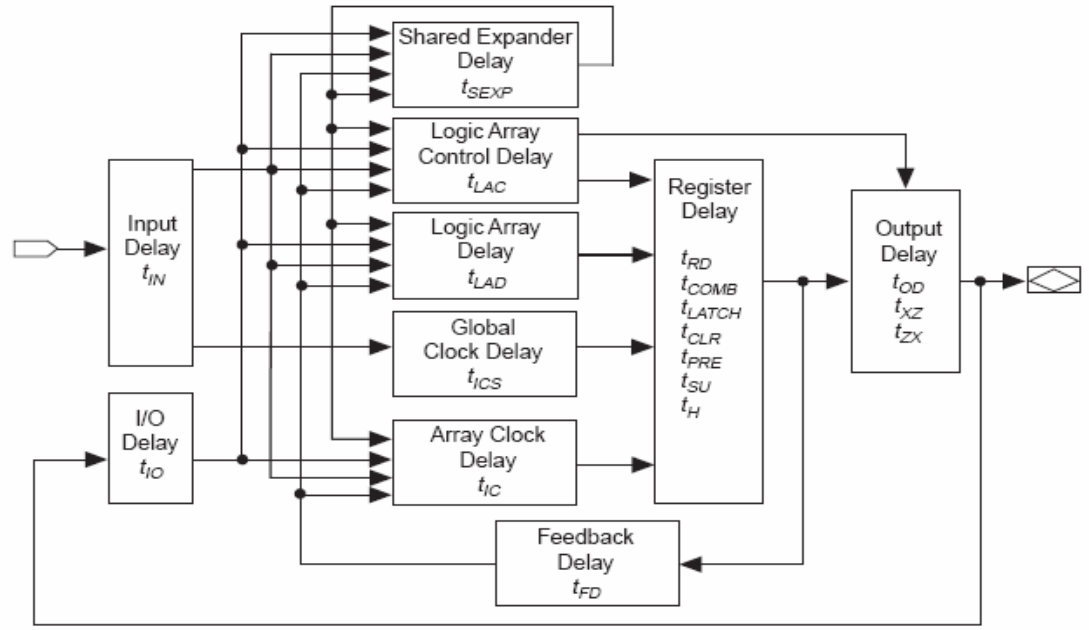

Max5000

Multi-LAB EPLDs

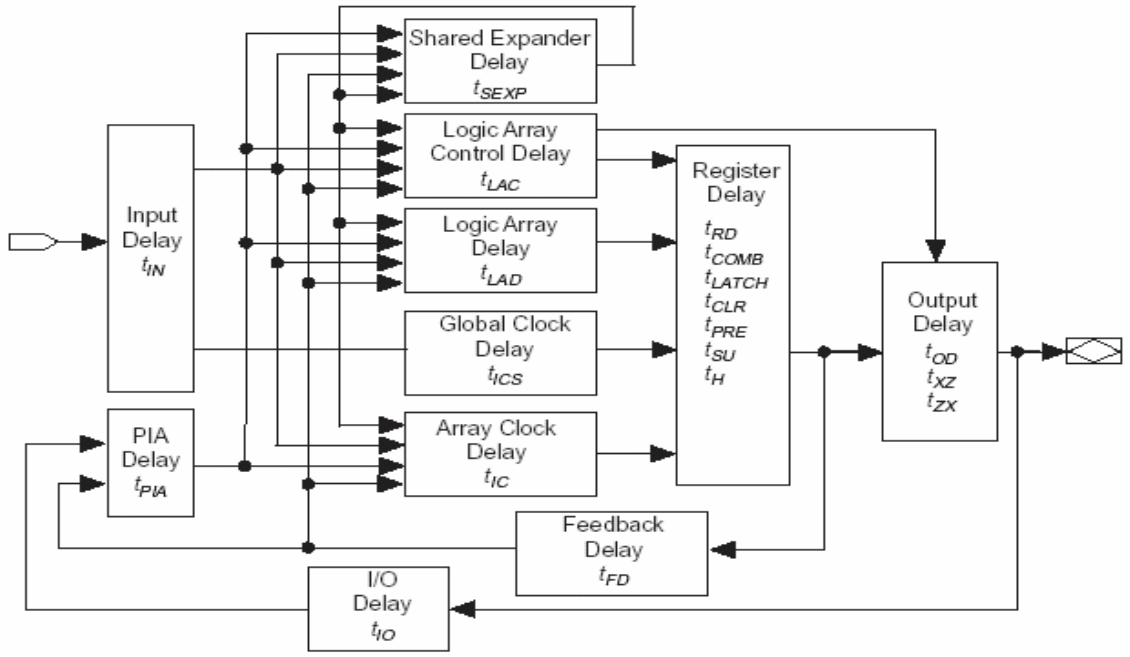

EPM5064, EPM5128, EPM5130 & EPM5192 AC Operating Conditions *Note (1)*

External Timing Parameters			EPM5064-1 EPM5128-1 EPM5130-1 EPM5192-1		EPM5064-2 EPM5128-2		EPM5064 EPM5128 EPM5130 EPM5192		
Symbol	**Parameter**	**Conditions**	**Min**	**Max**	**Min**	**Max**	**Min**	**Max**	**Unit**
t_{PD1}	Input to non-registered output	C1 = 35 pF		25		30		35	ns
t_{PD2}	I/O input to non-registered output	C1 = 35 pF		40		45		55	ns
t_{SU}	Global clock setup time		15		20		25		ns
t_{H}	Global clock hold time		0		0		0		ns
t_{CO1}	Global clock to output delay	C1 = 35 pF		14		16		20	ns
t_{CH}	Global clock high time		8		10		12.5		ns
t_{CL}	Global clock low time		8		10		12.5		ns
t_{ASU}	Array clock setup time		5		6		10		ns
t_{AH}	Array clock hold time		6		8		10		ns
t_{ACO1}	Array clock to output delay	C1 = 35 pF		25		30		35	ns
t_{ACH}	Array clock high time	*Note (2)*	11		14		16		ns
t_{ACL}	Array clock low time		9		11		14		ns
t_{CNT}	Minimum global clock period			20		25		30	ns
t_{ODH}	Output data hold time after clock	C1 = 35 pF, *Note (3)*	2		2		2		ns
f_{CNT}	Maximum internal global clock frequency	*Note (4)*	50		40		33.3		MHz
t_{ACNT}	Minimum array clock period			20		25		30	ns
f_{ACNT}	Maximum internal array clock frequency	*Note (4)*	50		40		33.3		MHz
f_{MAX}	Maximum clock frequency	*Note (5)*	62.5		50		40		MHz

Internal Timing Parameters *Note (6)*			EPM5064-1 EPM5128-1 EPM5130-1 EPM5192-1		EPM5064-2 EPM5128-2		EPM5064 EPM5128 EPM5130 EPM5192		
Symbol	**Parameter**	**Conditions**	**Min**	**Max**	**Min**	**Max**	**Min**	**Max**	**Unit**
t_{IN}	Input pad and buffer delay			5		7		11	ns
t_{IO}	I/O input pad and buffer delay			6		6		11	ns
t_{SEXP}	Expander array delay			12		14		20	ns
t_{LAD}	Logic array delay			12		14		14	ns
t_{LAC}	Logic control array delay			10		12		13	ns
t_{OD}	Output buffer and pad delay	C1 = 35 pF		5		5		6	ns
t_{ZX}	Output buffer enable delay	C1 = 35 pF		10		11		13	ns
t_{XZ}	Output buffer disable delay	C1 = 5 pF		10		11		13	ns
t_{SU}	Register setup time		6		8		12		ns
t_{LATCH}	Flow-through latch delay			3		4		4	ns
t_{RD}	Register delay			1		2		2	ns
t_{COMB}	Combinatorial delay			3		4		4	ns
t_{H}	Register hold time		4		6		8		ns
t_{IC}	Array clock delay			14		16		16	ns
t_{ICS}	Global clock delay			3		2		1	ns
t_{FD}	Feedback delay			1		1		2	ns
t_{PRE}	Register preset time			5		6		7	ns
t_{CLR}	Register clear time			5		6		7	ns
t_{PIA}	Programmable interconnect array delay			14		16		20	ns

Max 5000: Implementation of combinational Logic circuit with **<u>four</u>** <u>or less</u> non-combinable product terms.

Option I : use AND array

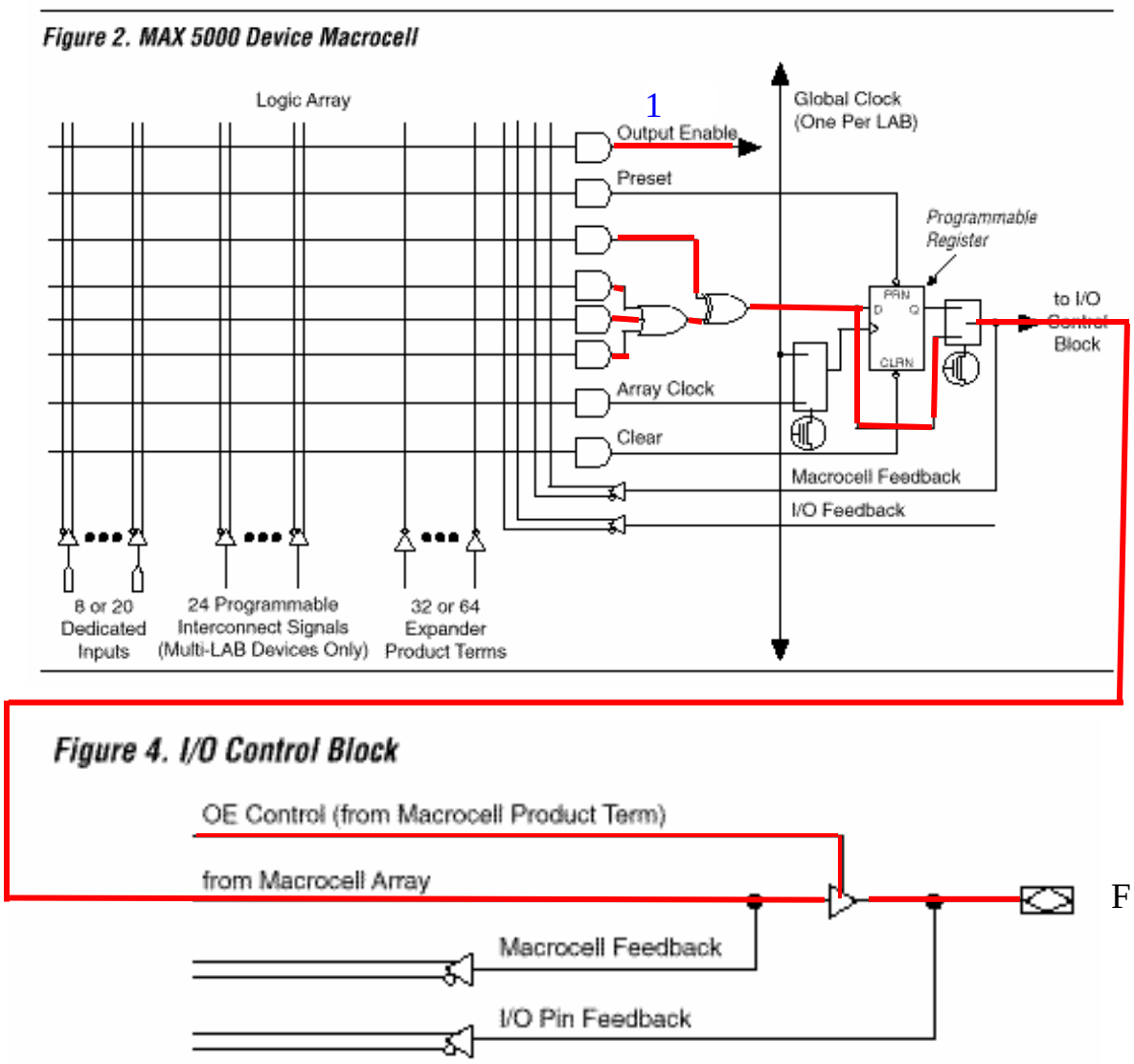

F

Variables are connected to I/O pins

Propagation Delay = $t_{IO} + t_{PIA} + t_{LAD} + t_{COMB} + t_{OD}$

Variables are connected to dedicated input pins

Propagation Delay = $t_{IN} + t_{LAD} + t_{COMB} + t_{OD}$

Option II : Use Expanders (can be used for as many product terms as the availability of the expanders: each product term needs one expander)

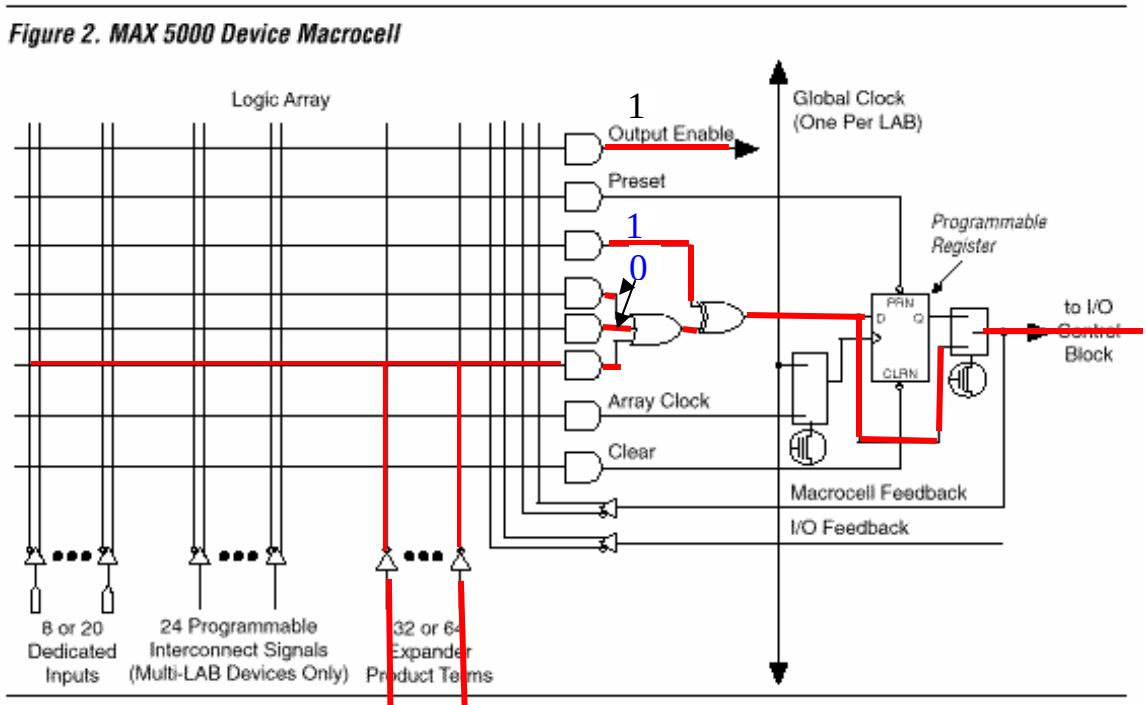

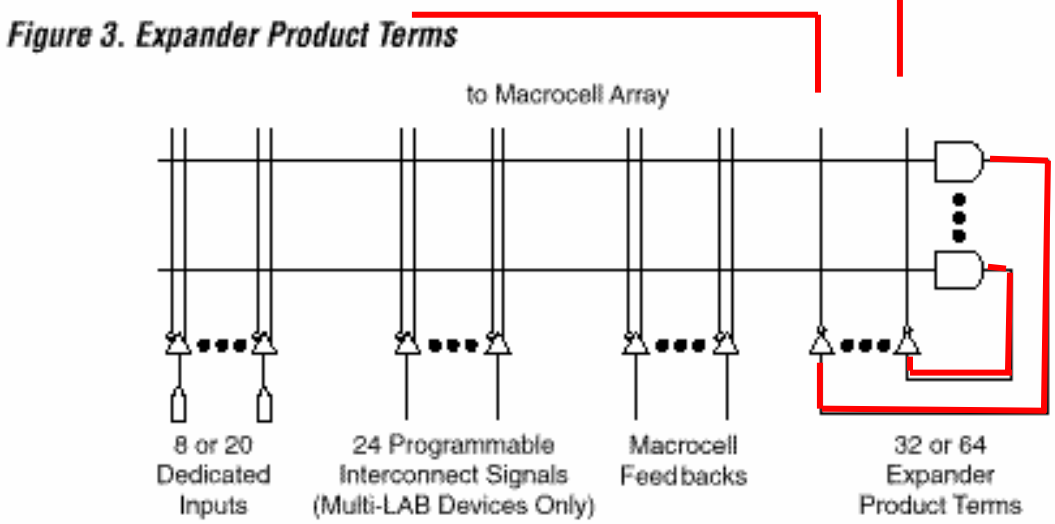

Variables are connected to I/O pins

Propagation Delay = $t_{IO} + t_{PIA} + t_{SEXP} + t_{LAD} + t_{COMB} + t_{OD}$

Variables are connected to dedicated input pins

Propagation Delay = $t_{IN} + t_{SEXP} + t_{LAD} + t_{COMB} + t_{OD}$

Max5000: Implementation of sequential circuit

Implementation of a 2-bit sequencer that sequences in the following order: 0, 1, 2, and repeat.

q1	q0	Q1	Q0	D1	D0
0	0	0	1	0	1
0	1	1	0	1	0
1	0	0	0	0	0
1	1	0	0	0	0

$D0 = \overline{q0}\ \overline{q1}$

$D1 = \overline{q1}\ q0$

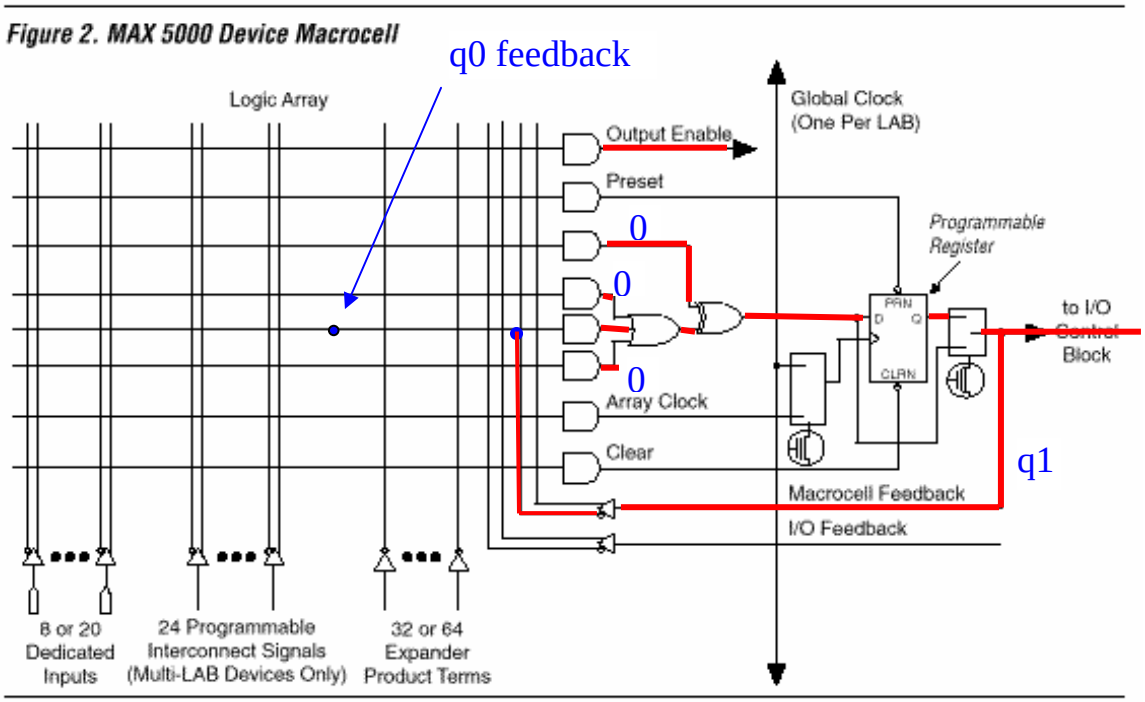

q0 implementation not shown.

Assume macrocells reside in the same LAB

$$T_{CLK\ min} = t_{RD} + t_{FD} + t_{LAD} + t_{SU}$$

$$F_{CLKmax} = 1 / T_{CLK\ min}$$

Max5000 Upgrade-able Features in Newer PLDs

1. Unused registers are wasted; they cannot be used for other purposes.
2. No open-drain output option
3. Unused AND gates in the AND array are wasted; they cannot be used for other purposes.