ECE420 **VHDL Types Conversion** **Prof. Law**

Types

STD_LOGIC	'U', 'X', '0', '1', 'Z', 'W', 'L', 'H', '-'	
STD_LOGIC_VECTOR	ARRAY of STD_LOGIC_VECTOR	
INTEGER	unsigned integer range : 0 to n	
	signed integer range: -k to + n	
UNSIGNED	ARRAY of STD_LOGIC_VECTOR	-- Magnitude
SIGNED	ARRAY of STD_LOGIC_VECTOR	-- Signed

Type Casting

```
std_logic_vector_signal  <= STD_LOGIC_VECTOR(unsigned_signal );          --same size
std_logic_vector_signal   <= STD_LOGIC_VECTOR(signed_signal );           --same size
unsigned_signal <= UNSIGNED(std_logic_vector_signal );                   --same size
signed_signal <= SIGNED(std_logic_vector_signal );                       --same size
```

USE IEEE.NUMERIC_STD.ALL; **--** Do not use with STD_LOGIC_ARITH package.
-- Recommended for new design

```
unsigned_integer_signal <= TO_INTEGER(unsigned_signal );
unsigned_integer_signal <= TO_INTEGER(UNSIGNED(std_logic_vector_signal ));
signed_integer_signal <= TO_INTEGER(signed_signal );
signed_integer_signal <= TO_INTEGER(SIGNED(std_logic_vector_signal ));
unsigned_signal  <= TO_UNSIGNED(unsigned_integer_signal, 8);             --assume array size is 8
signed_signal  <= TO_SIGNED(signed_integer_signal, 8);                   --assume array size is 8
std_logic_vector_signal <= STD_LOGIC_VECTOR(TO_UNSIGNED(unsigned_integer,8));
std_logic_vector_signal <= STD_LOGIC_VECTOR(TO_SIGNED(signed_integer,8));
```

USE IEEE.STD_LOGIC_ARITH.ALL; -- Do not use with NUMERIC_STD package

```
unsigned_integer_signal <= CONV_INTEGER(unsigned_signal );
signed_integer_signal <= CONV_INTEGER(signed_signal );
unsigned_signal  <= CONV_UNSIGNED(unsigned_integer_signal, 8);           --assume array size is 8
signed_signal  <= CONV_SIGNED(signed_integer_signal, 8);                 --assume array size is 8
std_logic_vector_signal <= CONV_STD_LOGIC_VECTOR(integer_signal, 8);   --assume array size is 8
std_logic_vector_signal <= CONV_STD_LOGIC_VECTOR(unsigned_signal, 8);   --assume array size is 8
std_logic_vector_signal <= CONV_STD_LOGIC_VECTOR(signed_signal, 8);   --assume array size is 8
```

USE IEEE.STD_LOGIC_UNSIGNED.ALL;

```
integer_signal <= CONV_INTEGER(std_logic_vector_signal);
```

USE IEEE.NUMERIC_STD.ALL -- recommended for newer designs

I : INTEGER signal or variable

U : UNSIGNED signal or variable

S : SIGNED signal or variable

V : STD_LOGIC_VECTOR signal or variable

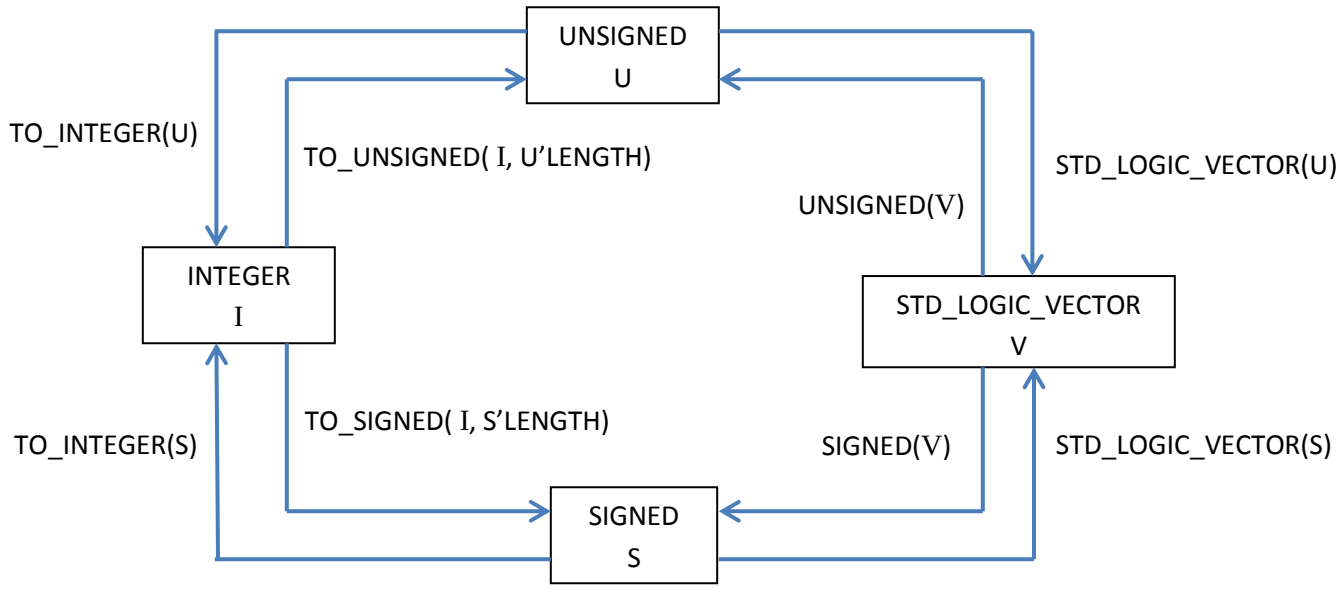

USE IEEE.STD_LOGIC_ARITH.ALL; -- for older designs
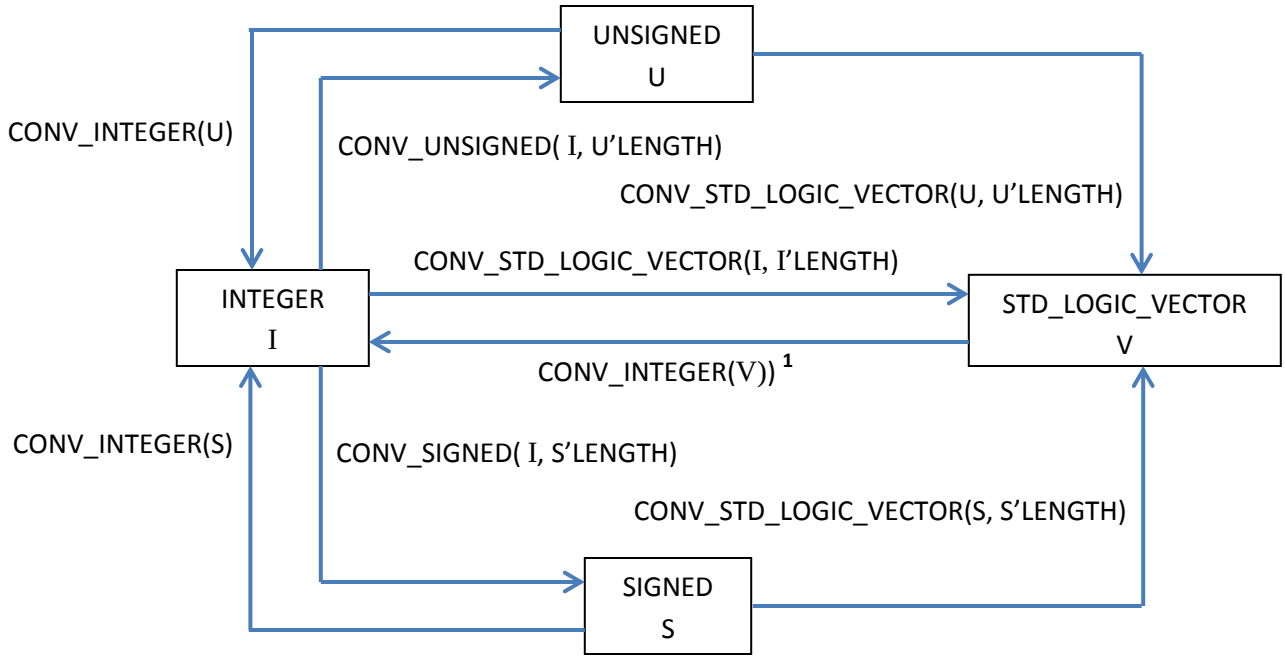
USE IEEE.STD_LOGIC_UNSIGNED.ALL; [1]