I. Macrocell Configuration: Simple Mode

For combinational circuits without output enable controls.

A. Dedicated Input Configuration: All OLMC except pins 15 & 16

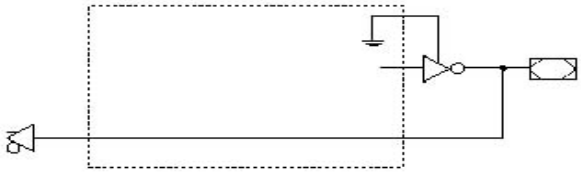

Gal16V8	PALCE16V8
SYN = 1	SG0 = 1
AC0 = 0	SG1 = 0
AC1 = 1	SL0x = 1

B. Combinational Output with Feedback Configuration: All OLMC except pins 15 & 16

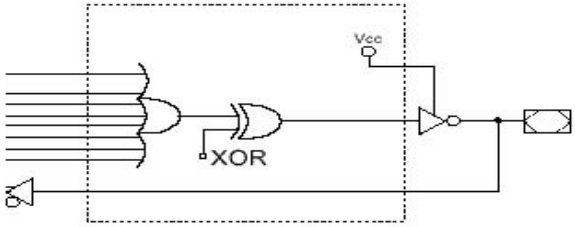

Gal16V8	PALCE16V8
SYN = 1	SG0 = 1
AC0 = 0	SG1 = 0
AC1 = 0	SL0x = 0

C. Combinational Output Configuration: Pins 15 & 16 permanently configured this way

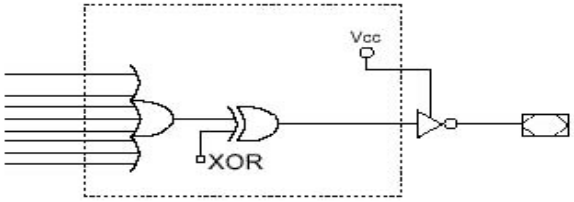

Gal16V8	PALCE16V8
SYN = 1	SG0 = 1
AC0 = 0	SG1 = 0
AC1 = 0	SL0x = 0

II. Macrocell Configuration: Complex Mode

For combinational circuits with output enable controls. Complex mode does not support dedicated inputs.

A. Combinational I/O Configuration: Pins 13 to18 are configured this way

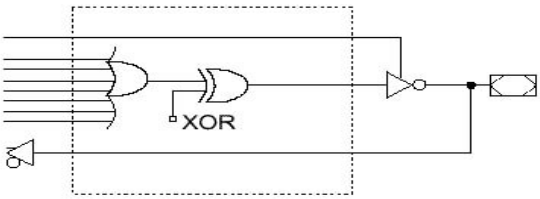

Gal16V8	PALCE16V8
SYN = 1	SG0 = 1
AC0 = 1	SG1 = 1
AC1 = 1	SL0x = 1

B. Combinational Output Configuration: Pins 12 & 19 are configured this way

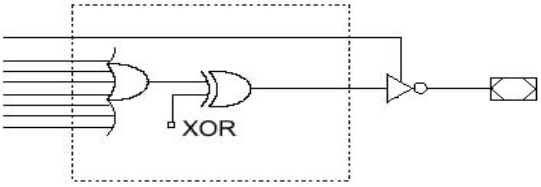

Gal16V8	PALCE16V8
SYN = 1	SG0 = 1
AC0 = 1	SG1 = 1
AC1 = 1	SL0x = 1

III. Macrocell Configuration: Registered Mode

For sequential & combinational circuits with output enable controls.

A. Registered Configuration: Pin 1 is configured as clk; Pin 11 is configured as /OE

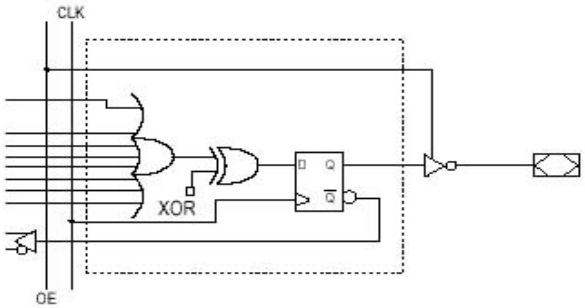

Gal16V8	PALCE16V8
SYN = 0	SG0 = 0
AC0 = 1	SG1 = 1
AC1 = 0	SL0x = 0

B. Combinational Configuration: Pin 1 is configured as clk; Pin 11 is configured as /OE

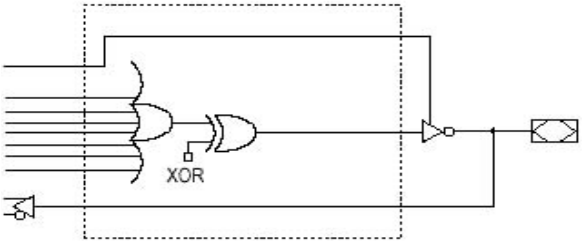

Gal16V8	PALCE16V8
SYN = 0	SG0 = 0
AC0 = 1	SG1 = 1
AC1 = 1	SL0x = 1

PALCE16V8 Macrocell

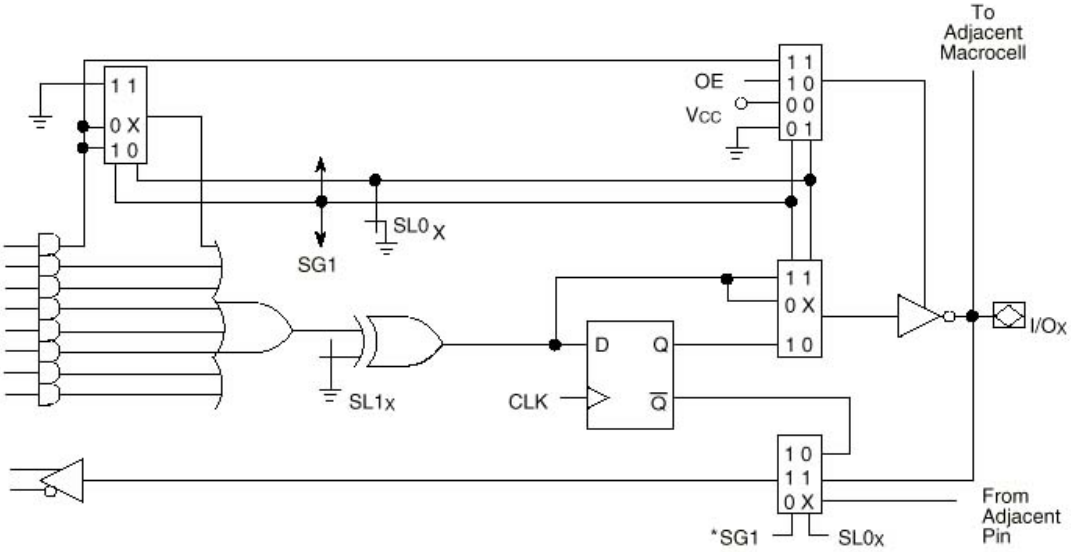

*In macrocells MC_0 and MC_7, SG1 is replaced by $\overline{SG0}$ on the feedback multiplexer.

16493D-4

PALCE16V8 Macrocell

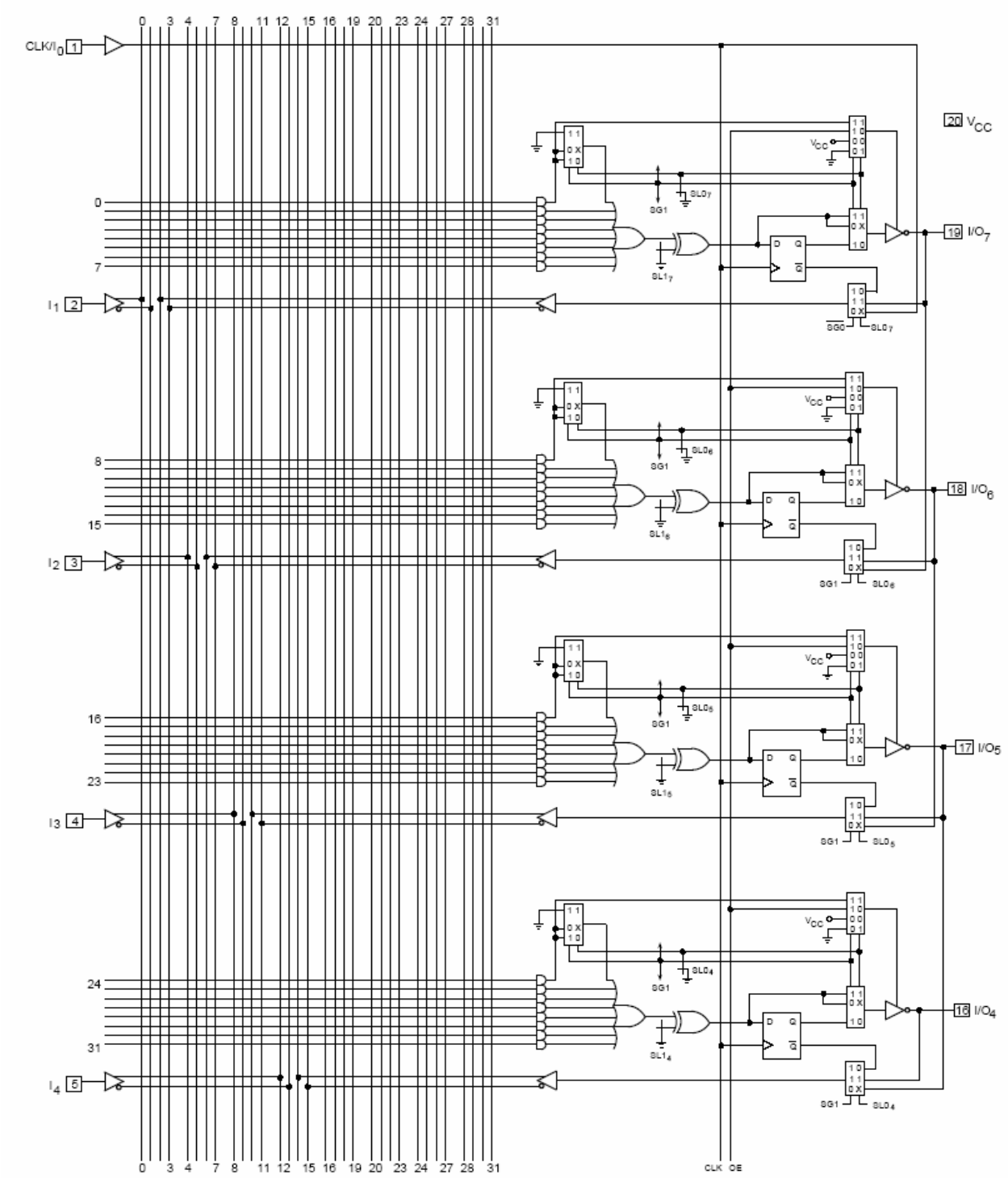
CLK/I0
1
I1
2
I2
3
I3
4
I4
5
20 VCC
19 I/O7
18 I/O6
17 I/O5
16 I/O4
0 3 4 7 8 11 12 15 16 19 20 23 24 27 28 31
0
7
8
15
16
23
24
31
CLK OE

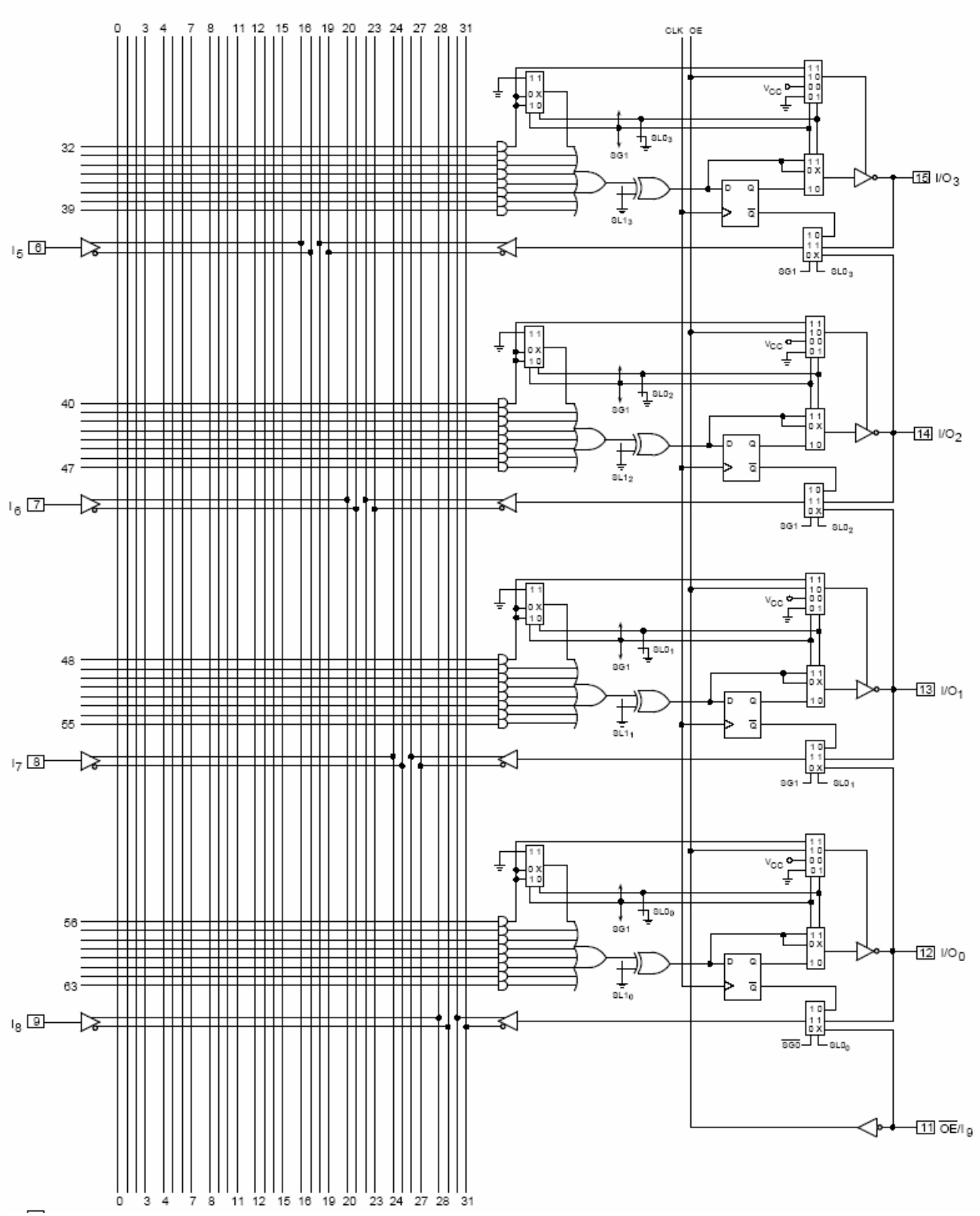
0 3 4 7 8 11 12 15 16 19 20 23 24 27 28 31
CLK OE
32
39
40
47
48
55
56
63
I5 6
I6 7
I7 8
I8 9
15 I/O3
14 I/O2
13 I/O1
12 I/O0
11 OE/I9
VCC
SG1
SL13
SL12
SL11
SL10
SLO3
SLO2
SLO1
SLO0
D Q
Q

PALCE16V8

Implementation of half-adder:

$$\text{sum} = x \oplus y = \overline{x}\, y + x\, \overline{y} = \Sigma(1, 2)$$

$$\text{cout} = x \bullet y = \Sigma(3)$$

Pin Assignment:

PIN	Signal	Column
2	x	0
3	y	4
19	sum	
18	cout	

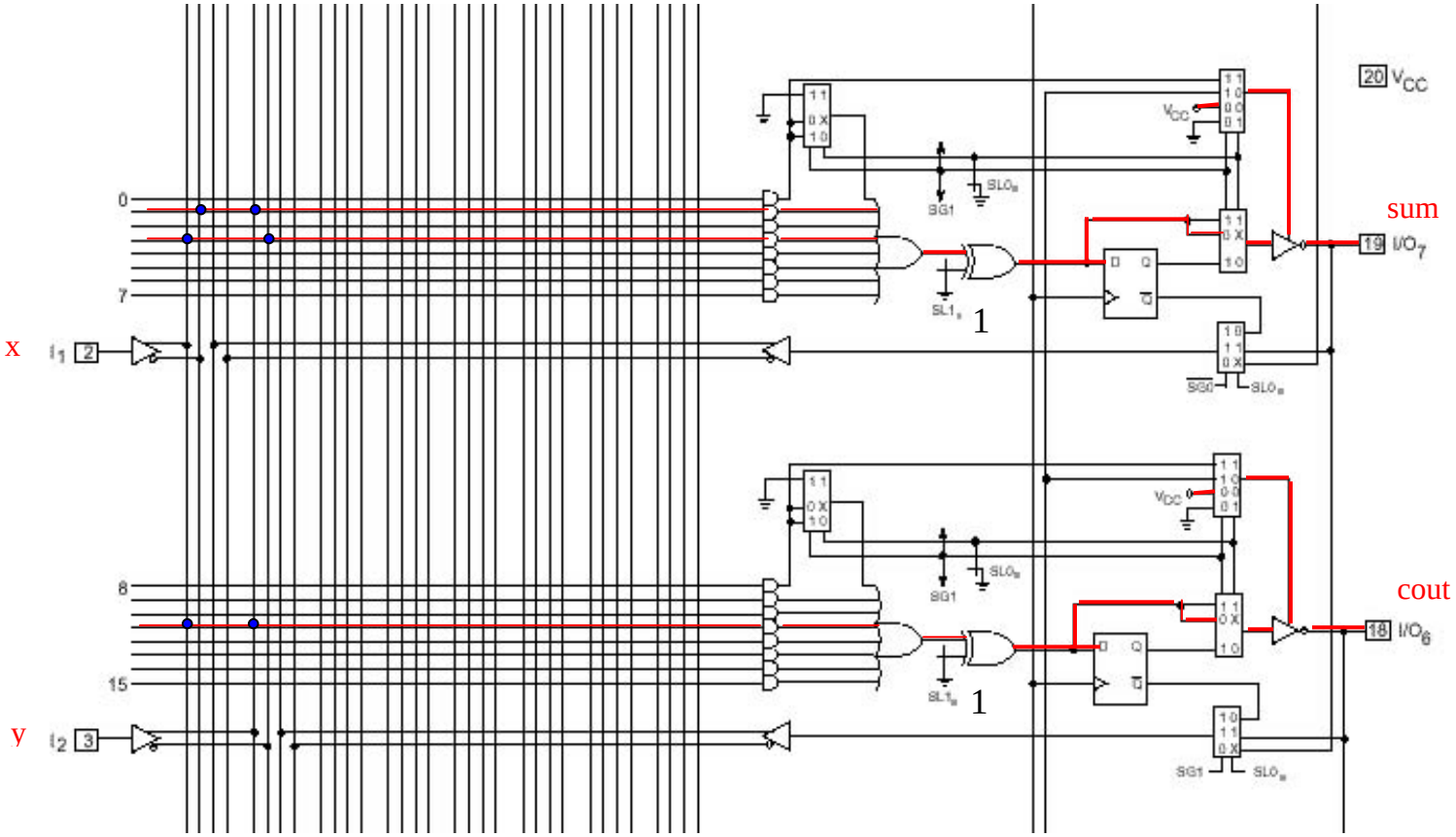

PALCE16V8

Implementation of:

$$F(v,w,x,y,z) = \Sigma(1, 2, 4, 7, 8, 11, 13, 14, 16, 19)$$
$$= \Sigma(1, 2, 4, 7, 8, 11, 13, 14) + \Sigma(16, 19)$$

Pin Assignment:

PIN	Signal	Column
2	v	0
3	w	4
4	x	8
5	y	12
6	z	16
18	F	

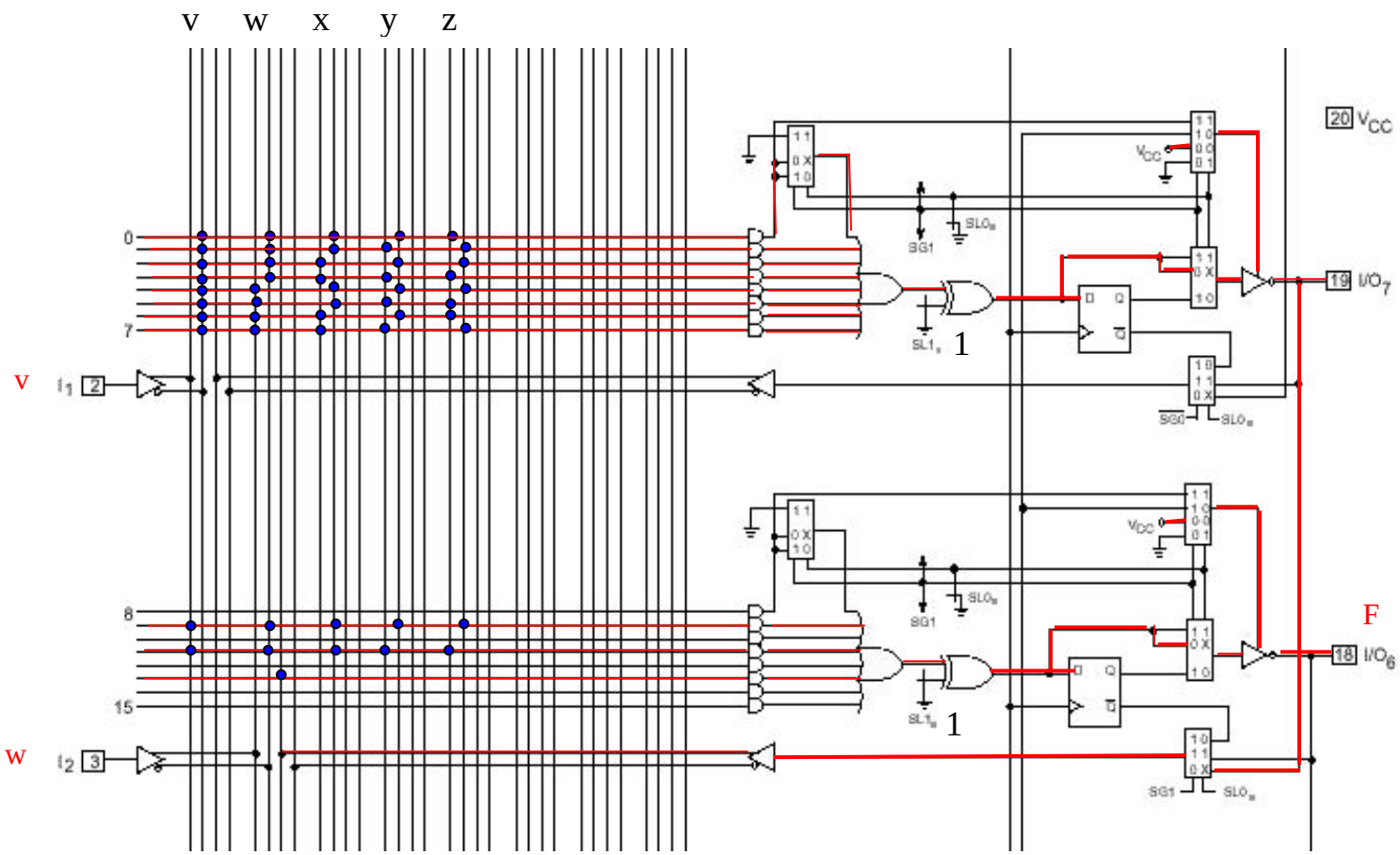

2-Bit Sequencer

Using a 16V8, implement a 2-bit sequencer that sequences in the following order: 0, 1, 2, and repeat.

q1	q0	Q1	Q0	D1	D0
0	0	0	1	0	1
0	1	1	0	1	0
1	0	0	0	0	0
1	1	0	0	0	0

$D0 = \overline{q0}\ \overline{q1}$

$D1 = \overline{q1}\ q0$

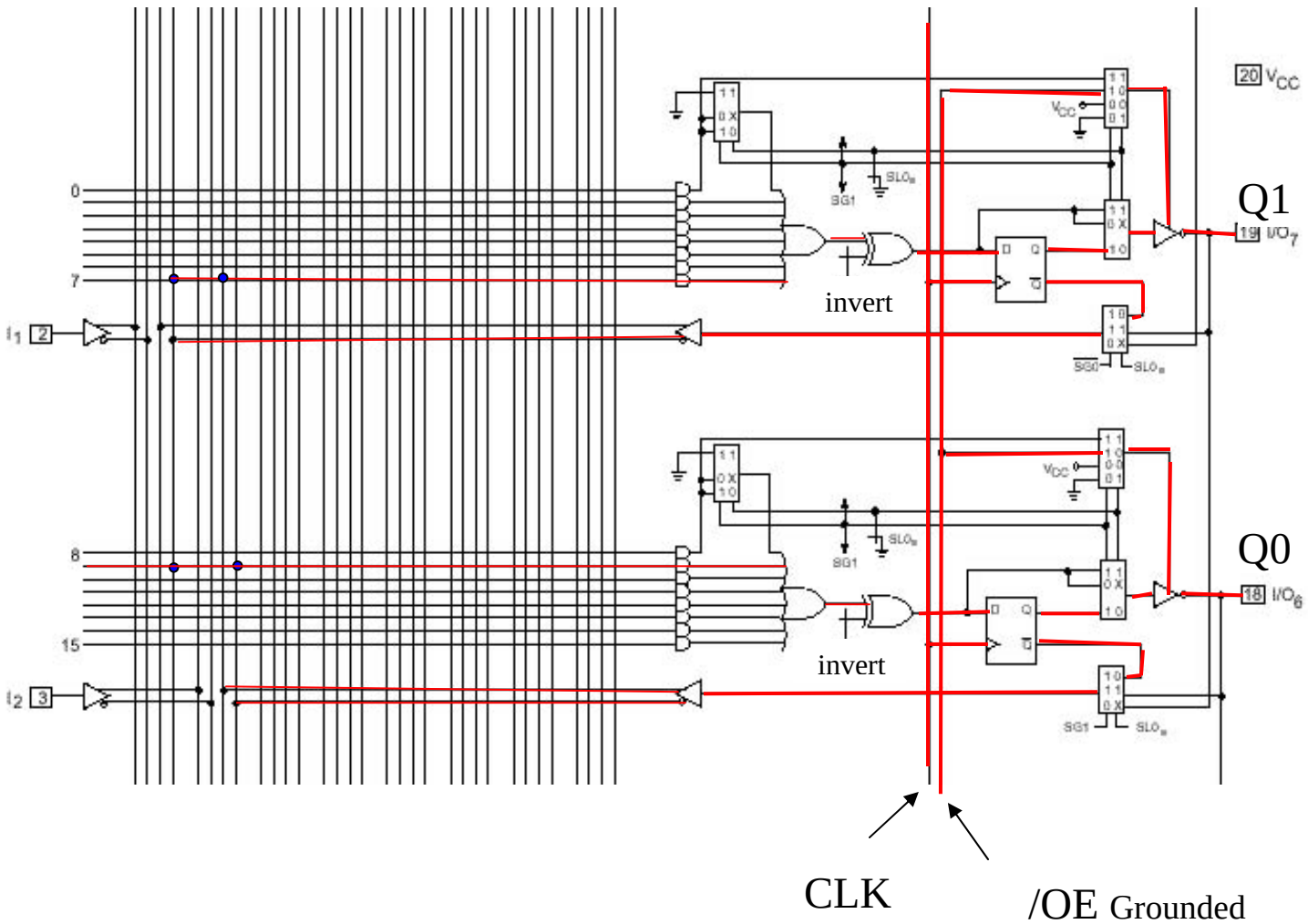

16V8 Upgrade-able Features in Newer PLDs

1. Choice of only one clock signal
2. No support of asynchronous clear
3. Signal must go outside to pin to feedback
4. Unused registers are wasted; they cannot be used for other purposes.
5. No open-drain output option
6. Unused AND gates in the AND array are wasted; they cannot be used for other purposes.
7. One input XOR gate is hard-programmed; it cannot be controlled by a signal.