Cyclone Resource Summary

M4K memory blocks: 4096 bits plus parity bits (total 4608 bits).

- Configurable for dedicated true dual-port, simple dual-port, or single-port memory with parity bit, First-in-first-out (FIFO), shift register, and ROM

Embedded multiplier block:

- Configurable for up to two 9 × 9-bit multipliers, or one 18 × 18-bit multiplier.

Advanced I/O support:

- Differential input/output (I/O) pins and Single-ended I/O pins.

Three dedicated registers per I/O element (IOE):

- One input register, one output register, and one output-enable register

Programmable bus-hold feature

Programmable output drive strength feature; MultiVoltTM I/O standard support for 1.5-, 1.8-, 2.5-, and 3.3-V interfaces

Programmable delays from the pin to the IOE or logic array.

Phase-locked loops (PLLs) for clock synthesis and synchronization:

- High-speed external memory support, including DDR, DDR2, and SDR SDRAM, and QDRII SRAM with dual-purpose DQS, DQ, and DM pins.

Table 2–1. Cyclone II Device Resources

Device	LAB Columns	LAB Rows	LEs	PLLs	M4K Memory Blocks	Embedded Multiplier Blocks
EP2C5	24	13	4,608	2	26	13
EP2C8	30	18	8,256	2	36	18
EP2C20	46	26	18,752	4	52	26
EP2C35	60	35	33,216	4	105	35
EP2C50	74	43	50,528	4	129	86
EP2C70	86	50	68,416	4	250	150

Figure 2–1. Cyclone II EP2C20 Device Block Diagram

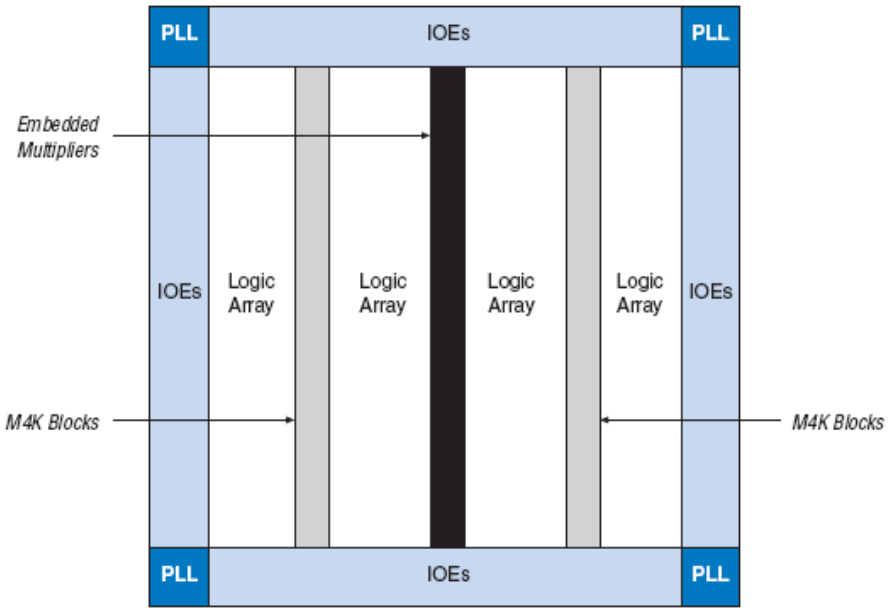

Figure 2–5. Cyclone II LAB Structure

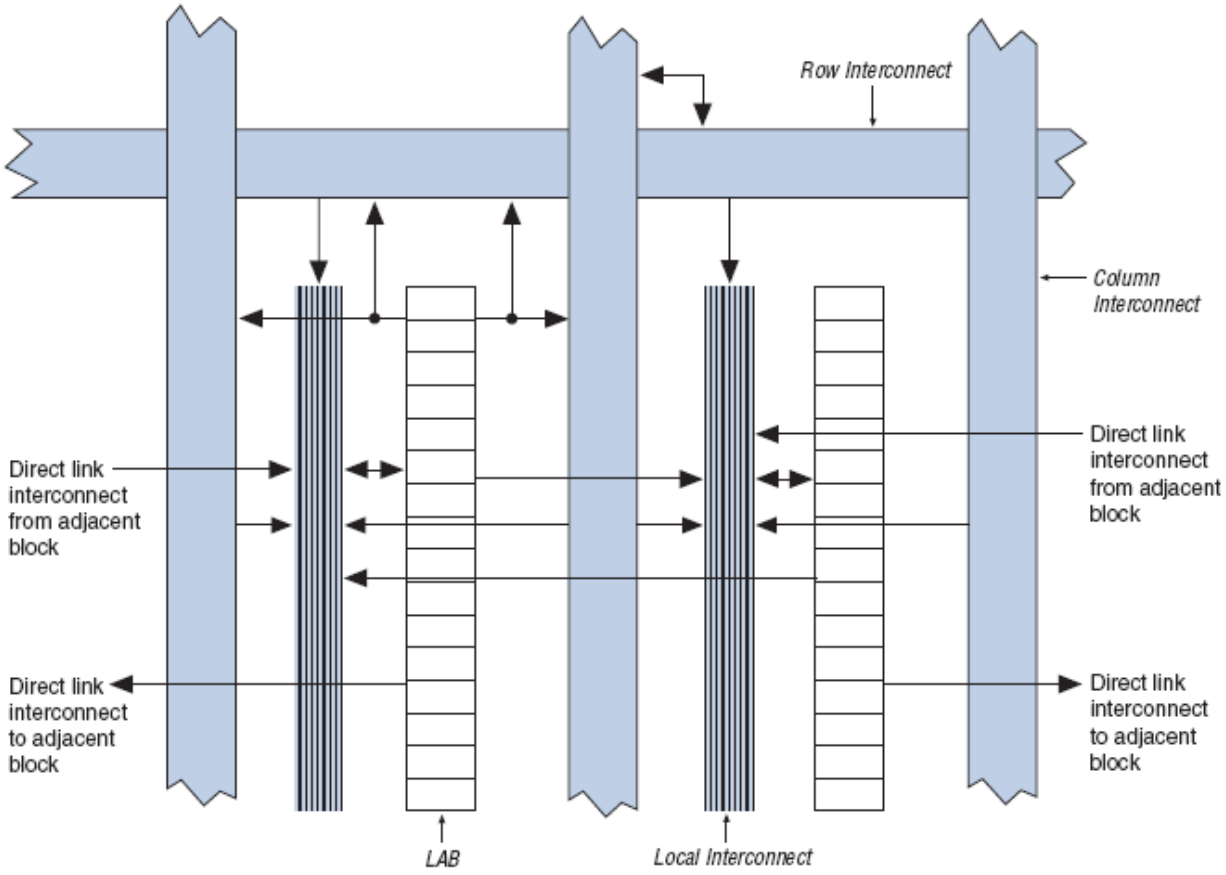

Row Interconnects

Dedicated row interconnects route signals to and from LABs, PLLs, M4Kmemory blocks, and embedded multipliers within the same row.

- Direct link interconnects between LABs and adjacent blocks
- R4 interconnects traversing four blocks to the right or left
- R24 interconnects for high-speed access across the length of the device

Column Interconnects

Dedicated column interconnect routes signals to and from LABs, M4K memory blocks, and embedded multipliers within the same column, and row and column IOEs.

- Register chain interconnects within an LAB
- C4 interconnects traversing a distance of four blocks in an up and own direction
- C16 interconnects for high-speed vertical routing through the device

Lab Resources

Each LAB consists of the following:

- 16 LEs
- LAB control signals, two clocks, two clock enables, two asynchronous clears, one synchronous clear, one synchronous load.
- LE carry chains
- Register chains
- Local interconnect

LE Resources

- Four-input look-up table (LUT), which is a function generator that can implement any function of four variables
- A programmable register
- A carry chain connection
- A register chain connection
- The ability to drive all types of interconnects: local, row, column, register chain, and direct link interconnects
- Support for register packing: LUT to drive one output while the register drives another output.
- Support for register feedback

Figure 2–2. Cyclone II LE

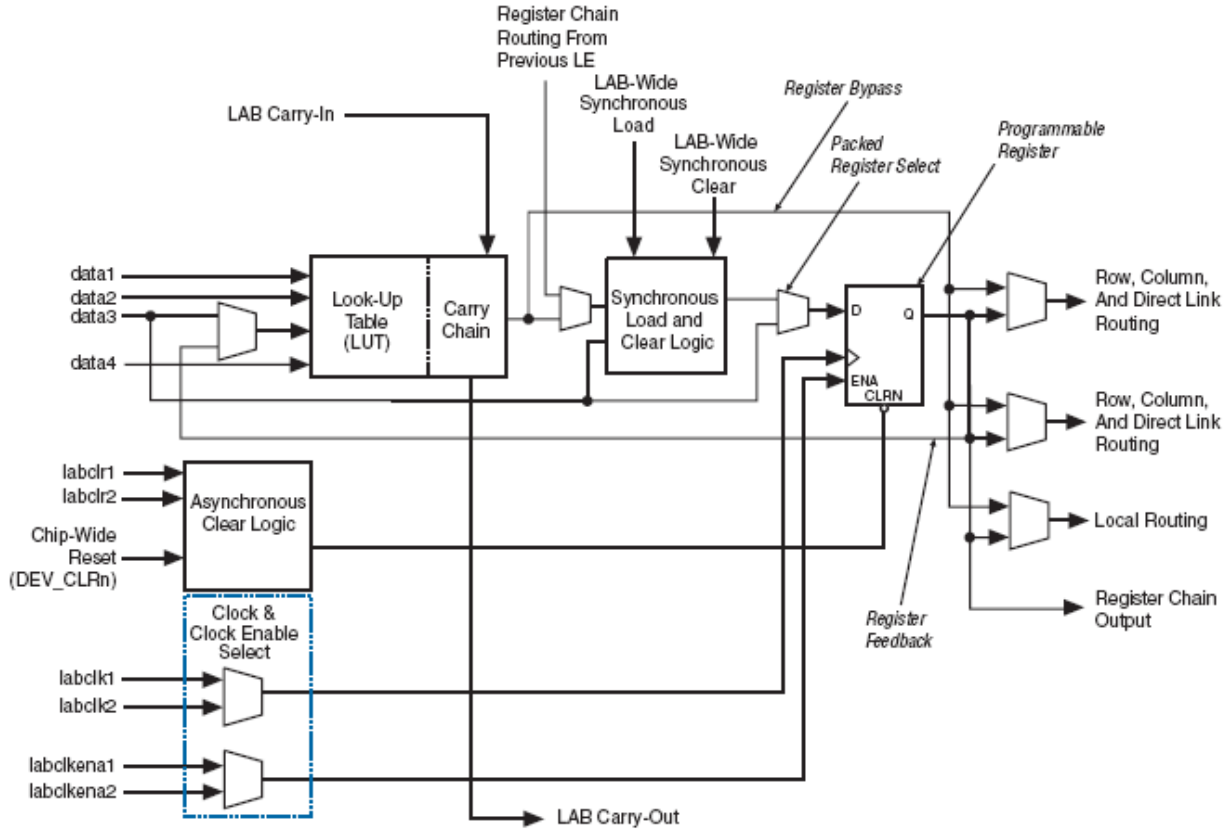

LE Operating Modes

- Normal mode
  For general logic applications and combinational functions.
  Support packed registers and register feedback.

- Arithmetic mode
  For implementing adders, counters, accumulators, and comparators.
  Support packed registers and register feedback.

LE Operating Modes

- Normal mode
  For general logic applications and combinational functions.
  Support packed registers and register feedback.

Figure 2–3. LE in Normal Mode

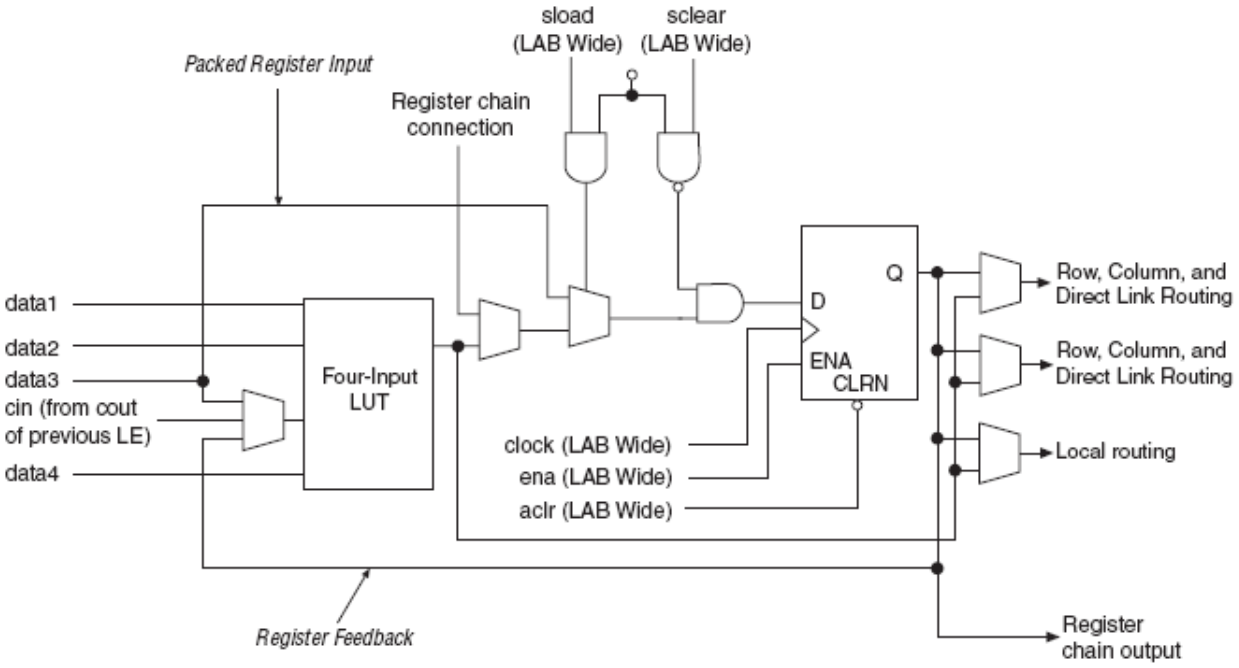

LE Operating Modes

- Arithmetic mode

  For implementing adders, counters, accumulators, and comparators.
  Support packed registers and register feedback.

Figure 2–4. LE in Arithmetic Mode

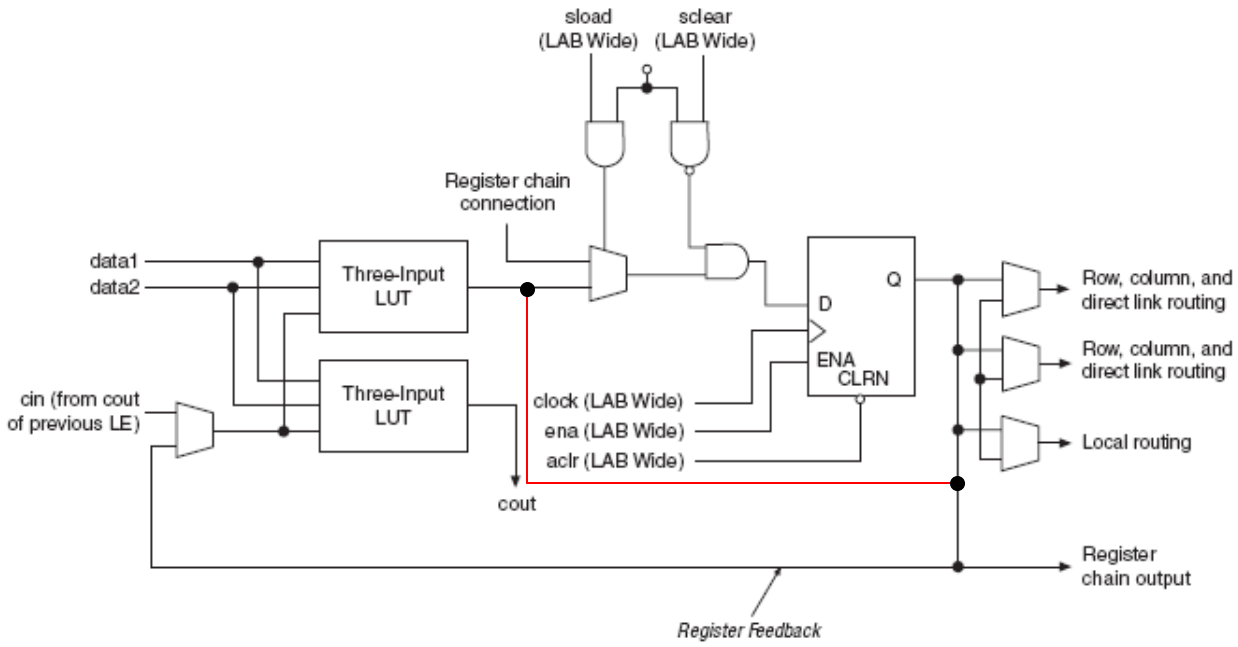

Figure 2–7. LAB-Wide Control Signals

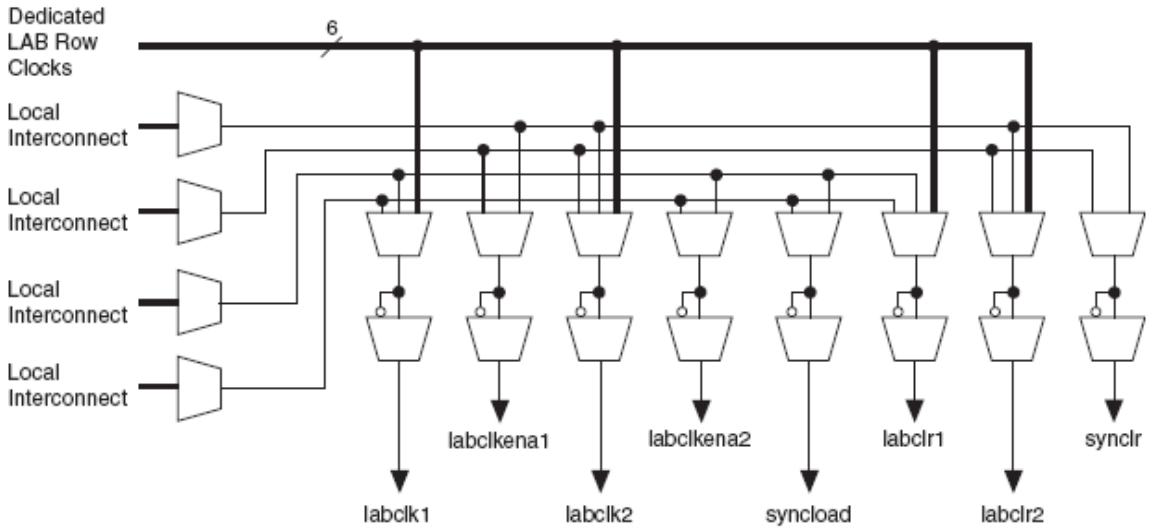

Table 2–3. Cyclone II Device Clock Resources

Device	Number of PLLs	Number of CLK Pins	Number of DPCLK Pins	Number of Global Clock Networks
EP2C5	2	8	8	8
EP2C8	2	8	8	8
EP2C20	4	16	20	16
EP2C35	4	16	20	16
EP2C50	4	16	20	16
EP2C70	4	16	20	16

Global Clock Network & Phase-Locked Loops

Cyclone II devices provide global clock networks and up to four PLLs for a complete clock management solution.

- Up to 16 global clock networks
- Up to four PLLs
- Global clock network dynamic clock source selection
- Global clock network dynamic enable and disable

Dedicated Clock Pins

If the dedicated clock pins are not used to feed the global clock networks, they can be used as general-purpose input pins to feed the logic array using the MultiTrack interconnect. However, if they are used as general purpose input pins, they do not have support for an I/O register and must use LE-based registers in place of an I/O register.

Dual-Purpose Clock Pins

A programmable delay chain is available from the DPCLK pin to its fanout destinations. To set the propagation delay from the DPCLK pin to its fan-out destinations, use the **Input Delay from Dual-Purpose Clock Pin to Fan-Out Destinations** assignment in the Quartus II software. These dual-purpose pins can connect to the global clock network for high-fanout control signals such as clocks, asynchronous clears, presets, and clock enables, or protocol control signals such as TRDY and IRDY for PCI, or DQS signals for external memory interfaces.

Figure 2–12. EP2C20 & Larger PLL, CLK[], DPCLK[] & Clock Control Block Locations

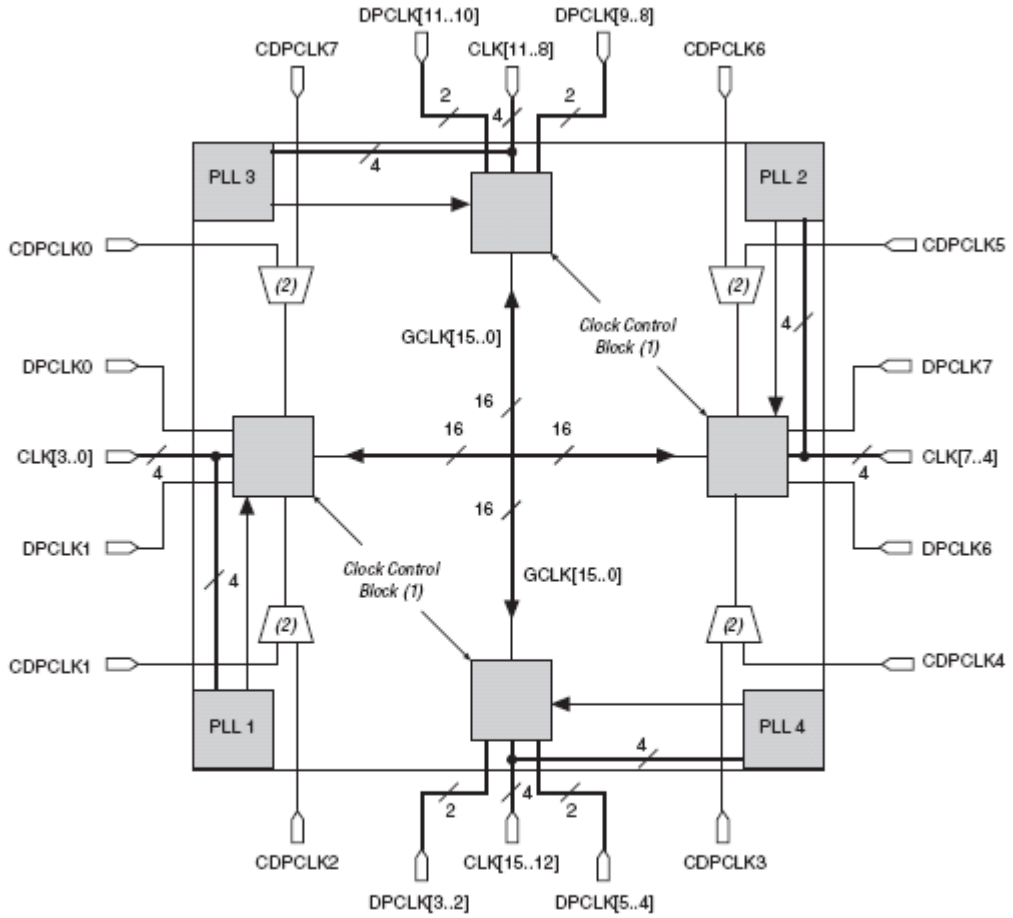

Notes to Figure 2–12:

(1) There are four clock control blocks on each side.

(2) Only one of the corner CDPCLK pins in each corner can feed the clock control block at a time. The other CDPCLK pins can be used as general-purpose I/O pins.

Figure 2–13. Clock Control Block

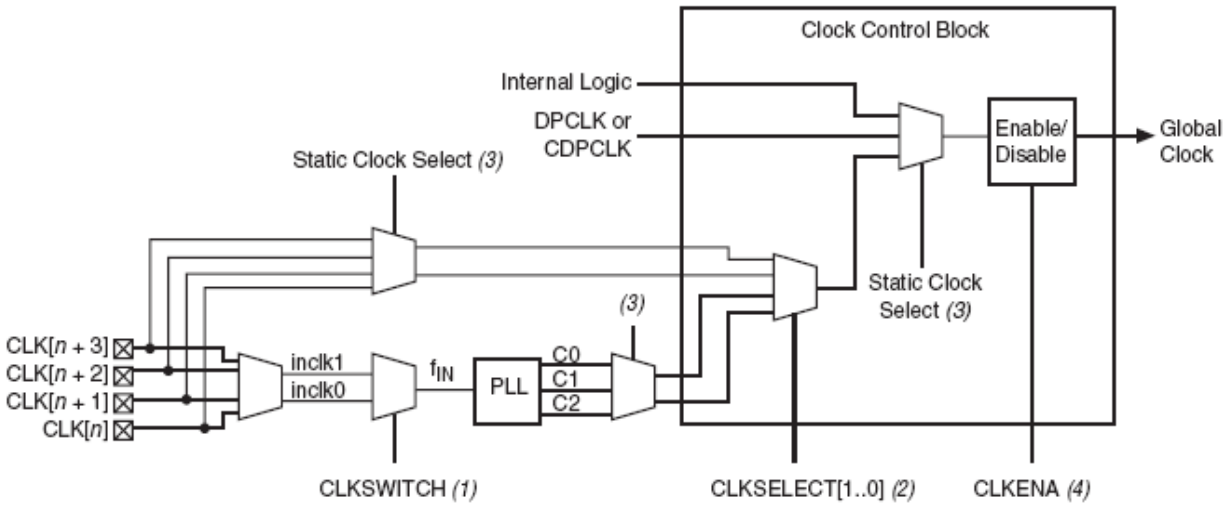

Notes to Figure 2–13:

(1) The `CLKSWITCH` signal can either be set through the configuration file or it can be dynamically set when using the manual PLL switchover feature. The output of the multiplexer is the input reference clock (f_{IN}) for the PLL.

(2) The `CLKSELECT[1..0]` signals are fed by internal logic and can be used to dynamically select the clock source for the global clock network when the device is in user mode.

(3) The static clock select signals are set in the configuration file and cannot be dynamically controlled when the device is in user mode.

(4) Internal logic can be used to enabled or disabled the global clock network in user mode.

Cyclone II PLLs provide general-purpose clocking as well as support for the following features:

- Clock multiplication and division
- Phase shifting
- Programmable duty cycle
- Up to three internal clock outputs
- One dedicated external clock output
- Clock outputs for differential I/O support
- Manual clock switchover
- Gated lock signal
- Three different clock feedback modes
- Control signals

Figure 2–16. Cyclone II PLL *Note (1)*

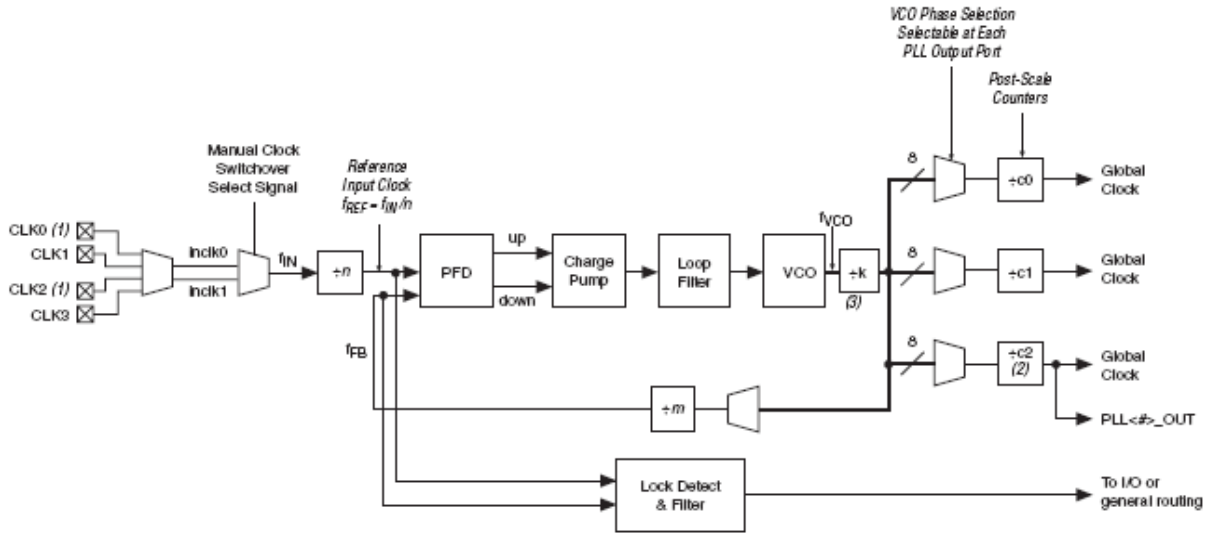

Notes to Figure 2–16:

(1) This input can be single-ended or differential. If you are using a differential I/O standard, then two CLK pins are used. LVDS input is supported via the secondary function of the dedicated CLK pins. For example, the CLK0 pin's secondary function is LVDSCLK1p and the CLK1 pin's secondary function is LVDSCLK1n. If a differential I/O standard is assigned to the PLL clock input pin, the corresponding CLK(n) pin is also completely used. The Figure 2–16 shows the possible clock input connections (CLK0/CLK1) to PLL1.

(2) This counter output is shared between a dedicated external clock output I/O and the global clock network.

Table 2–5. Cyclone II PLL Features

Feature	Description
Clock multiplication and division	*m* / (*n* × post-scale counter) *m* and post-scale counter values (C0 to C2) range from 1 to 32. *n* ranges from 1 to 4.
Phase shift	Cyclone II PLLs have an advanced clock shift capability that enables programmable phase shifts in increments of at least 45°. The finest resolution of phase shifting is determined by the voltage control oscillator (VCO) period divided by 8 (for example, 1/1000 MHz/8 = down to 125-ps increments).
Programmable duty cycle	The programmable duty cycle allows PLLs to generate clock outputs with a variable duty cycle. This feature is supported on each PLL post-scale counter (C0-C2).
Number of internal clock outputs	The Cyclone II PLL has three outputs which can drive the global clock network. One of these outputs (C2) can also drive a dedicated `PLL<#>_OUT` pin (single ended or differential).
Number of external clock outputs	The C2 output drives a dedicated `PLL<#>_OUT` pin. If the C2 output is not used to drive an external clock output, it can be used to drive the internal global clock network. The C2 output can concurrently drive the external clock output and internal global clock network.
Manual clock switchover	The Cyclone II PLLs support manual switchover of the reference clock through internal logic. This enables you to switch between two reference input clocks during user mode for applications that may require clock redundancy or support for clocks with two different frequencies.
Gated lock signal	The lock output indicates that there is a stable clock output signal in phase with the reference clock. Cyclone II PLLs include a programmable counter that holds the lock signal low for a user-selected number of input clock transitions, allowing the PLL to lock before enabling the locked signal. Either a gated locked signal or an ungated locked signal from the locked port can drive internal logic or an output pin.
Clock feedback modes	In zero delay buffer mode, the external clock output pin is phase-aligned with the clock input pin for zero delay. In normal mode, the PLL compensates for the internal global clock network delay from the input clock pin to the clock port of the IOE output registers or registers in the logic array. In no compensation mode, the PLL does not compensate for any clock networks.
Control signals	The `pllenable` signal enables and disables the PLLs. The `areset` signal resets/resynchronizes the inputs for each PLL. The `pfdena` signal controls the phase frequency detector (PFD) output with a programmable gate.

Embedded Memory

The Cyclone II embedded memory consists of columns of M4K memory blocks. The M4K memory blocks include input registers that synchronize writes and output registers to pipeline designs and improve system performance. The output registers can be bypassed, but input registers cannot. Hence, M4K memory blocks **do not** support asynchronous memory.

- 4,608 RAM bits(4096 bits plus 512 parity bits)
- 250-MHz performance
- True dual-port memory to provide simultaneous access to any location in the memory—either port can write and read data into and out of any memory location at the same time.
  One read and one write, two reads, or two writes operation for ×1, ×2, ×4, ×8, ×9, ×16, and ×18 modes
- Simple dual-port memory
  Can not do two reads or two writes of any two memory locations at the same time.
- Single-port memory
- Byte enable
- Parity bits
- Shift register
- FIFO buffer
- ROM
- Various clock modes
- Address clock enable

Single-Port Mode

Figure 8–6. Single-Port Mode *Note (1)*

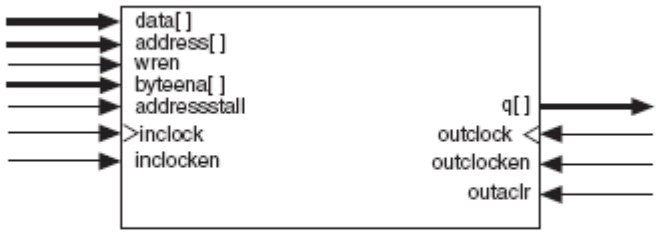

Note to Figure 8–6:

(1) Two single-port memory blocks can be implemented in a single M4K block in packed mode.

Figure 8–16. Cyclone II Input/Output Clock Mode in Single-Port Mode *Note (1)*

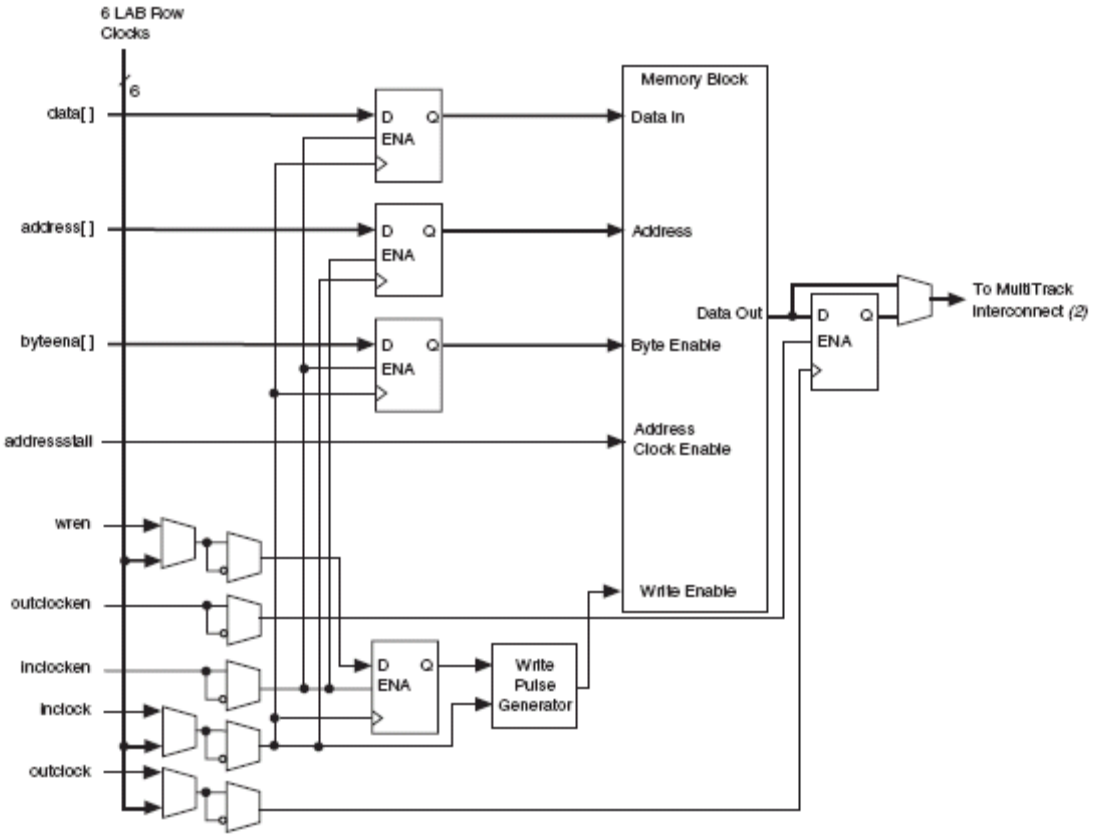

Notes to Figure 8–16:

(1) Violating the setup or hold time on the memory block address registers could corrupt memory contents. This applies to both read and write operations.

(2) See the *Cyclone II Device Family Data Sheet* in Volume 1 of the *Cyclone II Device Handbook* for more information on the MultiTrack interconnect.

Simple Dual-Port Mode

Figure 8–8. Cyclone II Simple Dual-Port Mode *Note (1)*

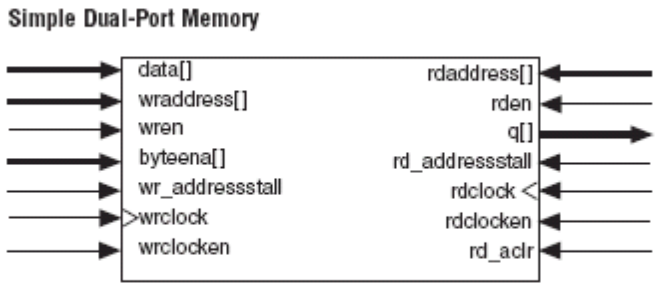

Note to Figure 8–8:

(1) Simple dual-port RAM supports input and output clock mode in addition to the read and write clock mode shown.

Figure 8–15. Cyclone II Input/Output Clock Mode in Simple Dual-Port Mode *Note (1)*

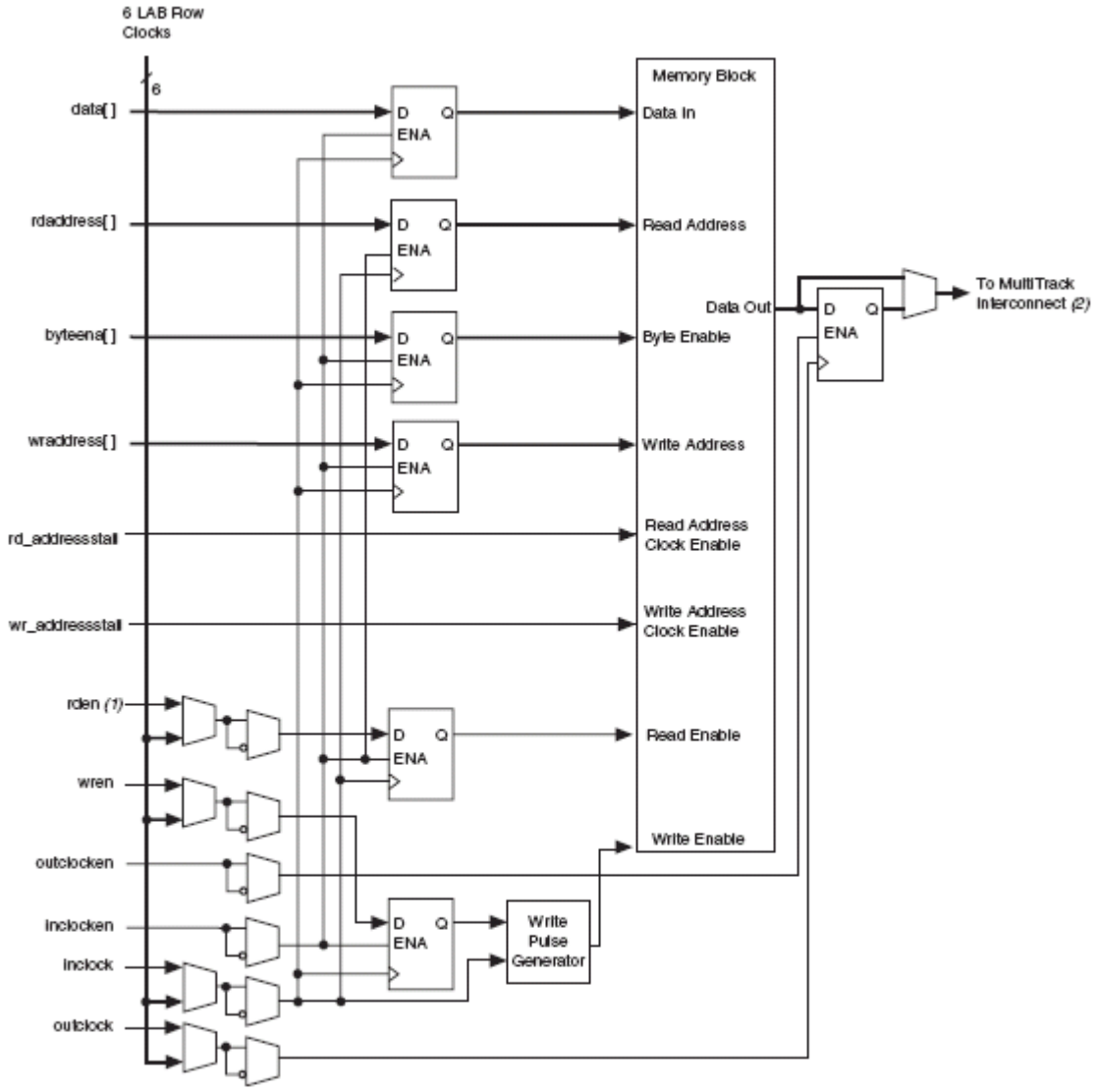

Notes to Figure 8–15:

(1) Violating the setup or hold time on the memory block address registers could corrupt memory contents. This applies to both read and write operations.

(2) See the *Cyclone II Device Family Data Sheet* in Volume 1 of the *Cyclone II Device Handbook* for more information on the MultiTrack™ interconnect.

True Dual-Port Mode

Figure 8–10. Cyclone II True Dual-Port Mode *Note (1)*

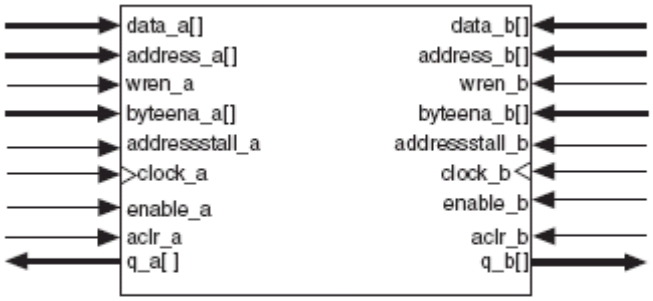

Note to Figure 8–10:

(1) True dual-port memory supports input and output clock mode in addition to the independent clock mode shown.

True Dual-Port Input/Output Clock Mode

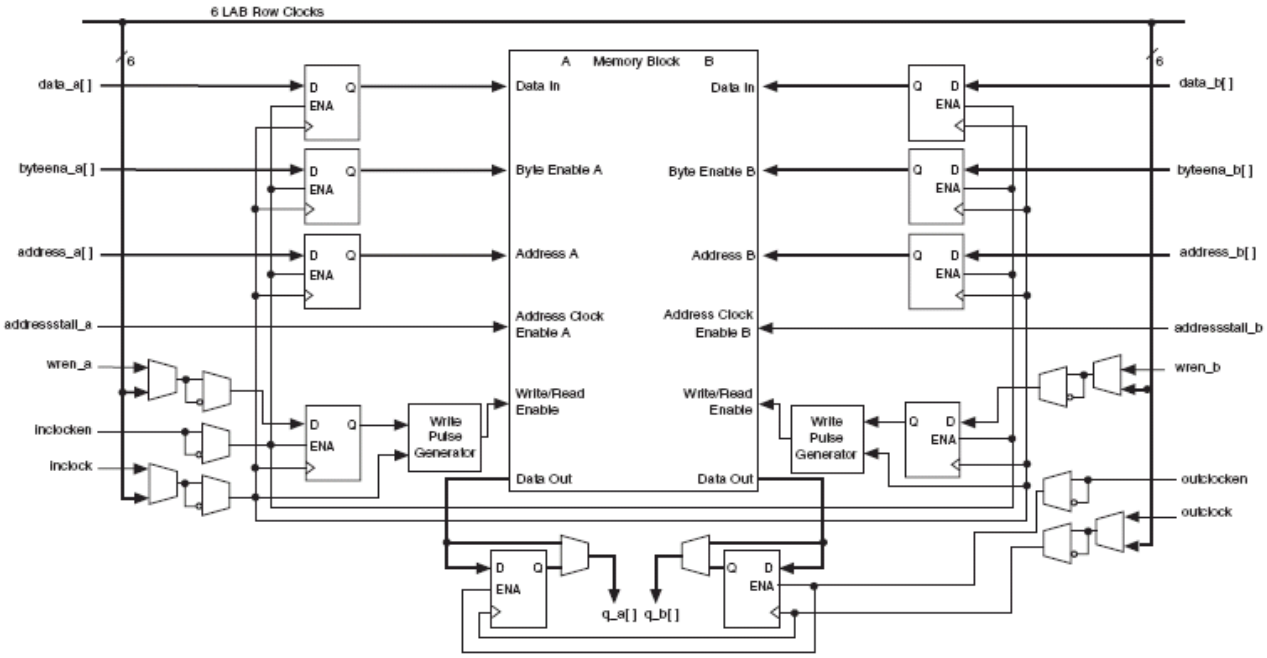

Table 2–7. M4K Memory Features	
Feature	**Description**
Maximum performance *(1)*	250 MHz
Total RAM bits per M4K block (including parity bits)	4,608
Configurations supported	4K × 1 2K × 2 1K × 4 512 × 8 512 × 9 256 × 16 256 × 18 128 × 32 (not available in true dual-port mode) 128 × 36 (not available in true dual-port mode)
Parity bits	One parity bit for each byte. The parity bit, along with internal user logic, can implement parity checking for error detection to ensure data integrity.
Byte enable	M4K blocks support byte writes when the write port has a data width of 1, 2, 4, 8, 9, 16, 18, 32, or 36 bits. The byte enables allow the input data to be masked so the device can write to specific bytes. The unwritten bytes retain the previous written value.
Packed mode	Two single-port memory blocks can be packed into a single M4K block if each of the two independent block sizes are equal to or less than half of the M4K block size, and each of the single-port memory blocks is configured in single-clock mode.
Address clock enable	M4K blocks support address clock enable, which is used to hold the previous address value for as long as the signal is enabled. This feature is useful in handling misses in cache applications.
Memory initialization file (**.mif**)	When configured as RAM or ROM, you can use an initialization file to pre-load the memory contents.
Power-up condition	Outputs cleared
Register clears	Output registers only
Same-port read-during-write	New data available at positive clock edge
Mixed-port read-during-write	Old data available at positive clock edge

Note to Table 2–7:

(1) Maximum performance information is preliminary until device characterization.

Table 2–9. M4K Clock Modes	
Clock Mode	**Description**
Independent	In this mode, a separate clock is available for each port (ports A and B). Clock A controls all registers on the port A side, while clock B controls all registers on the port B side.
Input/output	On each of the two ports, A or B, one clock controls all registers for inputs into the memory block: data input, `wren`, and address. The other clock controls the block's data output registers.
Read/write	Up to two clocks are available in this mode. The write clock controls the block's data inputs, `wraddress`, and `wren`. The read clock controls the data output, `rdaddress`, and `rden`.
Single	In this mode, a single clock, together with clock enable, is used to control all registers of the memory block. Asynchronous clear signals for the registers are not supported.

.

Table 2–10. Cyclone II M4K Memory Clock Modes			
Clocking Modes	**True Dual-Port Mode**	**Simple Dual-Port Mode**	**Single-Port Mode**
Independent	✓		
Input/output	✓	✓	✓
Read/write		✓	
Single clock	✓	✓	✓

Embedded Multiplier

Optimized for multiplier-intensive digital signal processing (DSP) functions, such as finite impulse response (FIR) filters, fast Fourier transform (FFT) functions, and discrete cosine transform (DCT) functions.

Operational mode:

One 18-bit multiplier or up to two independent 9-bit multipliers

Table 2–11. Number of Embedded Multipliers in Cyclone II Devices *Note (1)*

Device	Embedded Multiplier Columns	Embedded Multipliers	9 × 9 Multipliers	18 × 18 Multipliers
EP2C5	1	13	26	13
EP2C8	1	18	36	18
EP2C20	1	26	52	26
EP2C35	1	35	70	35
EP2C50	2	86	172	86
EP2C70	3	150	300	150

Note to Table 2–11:

(1) Each device has either the number of 9 × 9-, or 18 × 18-bit multipliers shown. The total number of multipliers for each device is not the sum of all the multipliers.

Figure 2–18. Multiplier Block Architecture

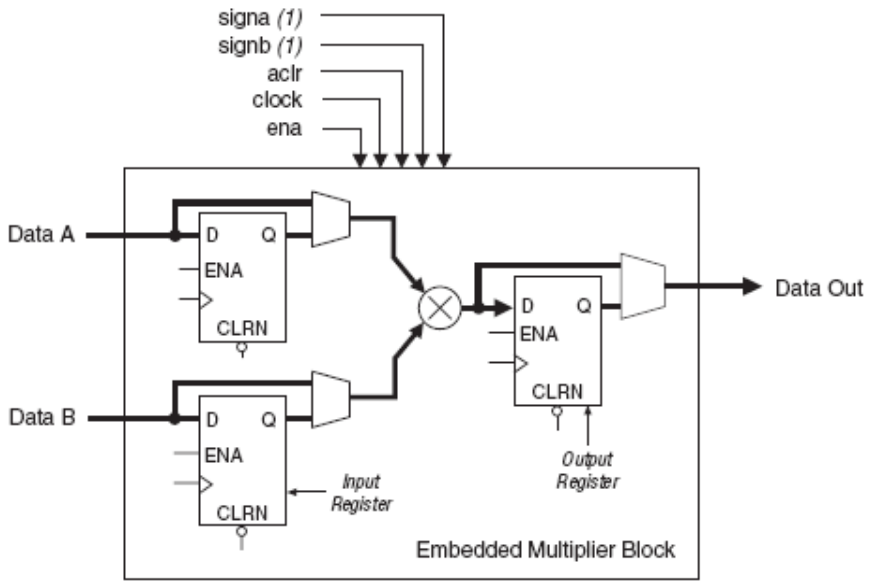

Note to Figure 2–18:

(1) If necessary, these signals can be registered once to match the data signal path.

Table 2–12. Multiplier Sign Representation		
Data A (signa Value)	**Data B (signb Value)**	**Result**
0 = Unsigned	0 = Unsigned	Unsigned
0 = Unsigned	1 = Signed	Signed
1 = Signed	0 = Unsigned	Signed
1 = Signed	1 = Signed	Signed

External memory Interface

- SDR SDRAM, DDR SDRAM, DDR2 SDRAM, and QDRII SRAM. with 167 MHz max clock speed.

DDR & DDR2 SDRAM

DDR SDRAM is a memory architecture that transmits and receives data at twice the clock speed. These devices transfer data on both the rising and falling edge of the clock signal. DDR2 SDRAM is the second generation memory based on the DDR SDRAM architecture and is capable of data transfer rates of up to 533 Mbps. Cyclone II devices support DDR and DDR2 SDRAM at up to 333 Mbps.

DDR SDRAM uses single-ended data strobe DQS, while DDR2 SDRAM has the option to use differential data strobes DQS and DQS#. Cyclone II devices do not use the optional differential data strobes for DDR2 SDRAM interfaces. You can leave the DDR2 SDRAM memory DQS# pin unconnected, because only the shifted DQS signal from the clock delay control circuitry captures data. DDR and DDR2 SDRAM ×16 devices use two DQS pins, and each DQS pin is associated with eight DQ pins. However, this is not the same as the ×16/×18 mode in Cyclone II devices. You need to configure the Cyclone II devices to use two sets of pins in ×8 mode. Similarly, if your ×72 memory module uses nine DQS pins where each DQS pin is associated with eight DQ pins, configure the Cyclone II device to use nine sets of DQS/DQ groups in ×8 mode.

QDRII SRAM

QDRII SRAM is the second generation of QDR SRAM devices. QDRII SRAM devices, which can transfer four words per clock cycle, fulfill the requirements facing next-generation communications system designers. QDRII SRAM devices provide concurrent reads and writes, zero latency, increased data throughput, and allow simultaneous access to the same address location.

QDRII SRAM clock signals:

- Input clocks K and K#
- Optional output clocks C and C#
- Echo clocks CQ and CQn

Clocks C#, K#, and CQn are logical complements of clocks C, K, and CQ, respectively. Clocks C, C#, K, and K# are inputs to the QDRII SRAM, and clocks CQ and CQn are outputs from the QDRII SRAM. Cyclone II devices use single-clock mode for QDRII SRAM interfacing. The K and K# clocks are used for both read and write operations, and the C and C# clocks are unused.

IOE Structure

Figure 2–20. Cyclone II IOE Structure

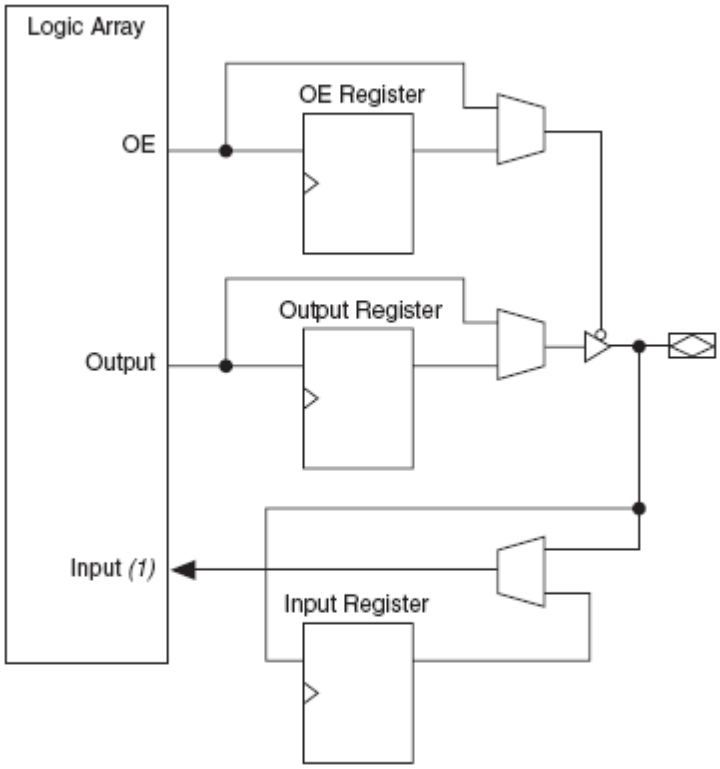

Note to Figure 2–20:

(1) There are two paths available for combinational or registered inputs to the logic array. Each path contains a unique programmable delay chain.