1011 Sequence Detector

<u>States Definitions</u>

S0 = A = none received (no expected bits received)
S1 = B = received “1”
S2 = C = received “10”
S3 = D = received “101”
S4 = E = received “1011”

Type I Mealy Machine Model
Overlapping of sequence is allowed

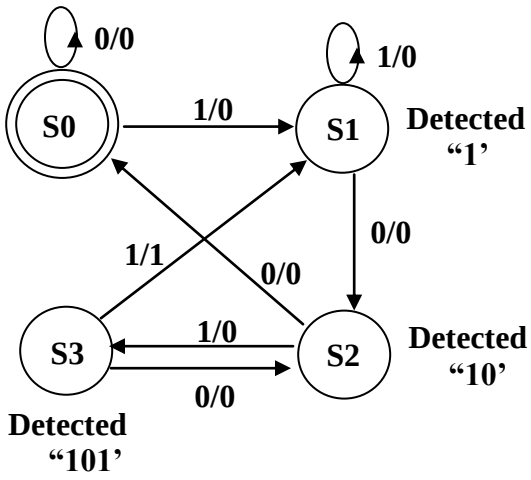

Type II Mealy Machine Model
Overlapping of sequence is not allowed

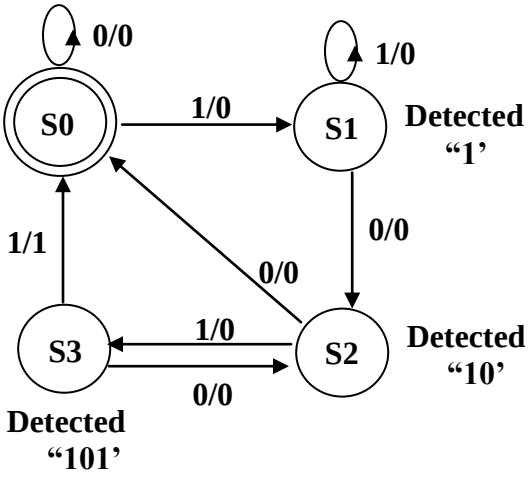

Type I Moore Machine Model
Overlapping of sequence is allowed

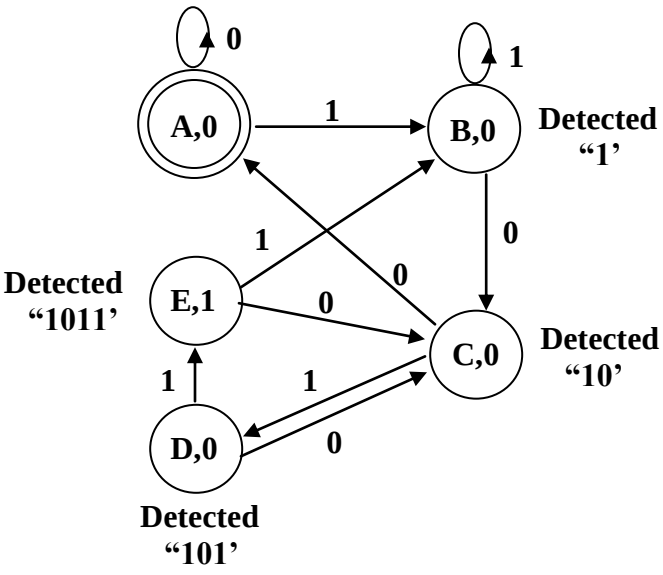

Type II Moore Machine Model
Overlapping of sequence is not allowed

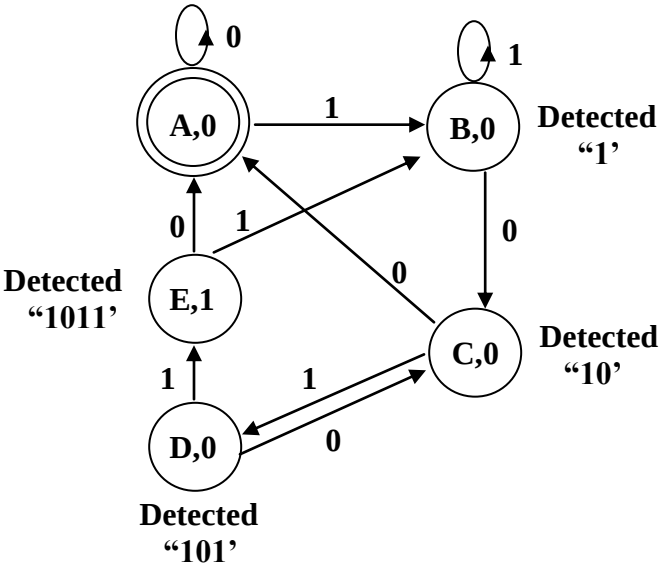

ECE320 **1011 Sequence Detector**

States Definitions

S0 = A = none received (no expected bits received); S1 = B = received "1"
S2 = C = received "10"; S3 = D = received "101"; S4 = E = received "1011"

Type III Mealy Machine Model
Reset on any incorrect sequence

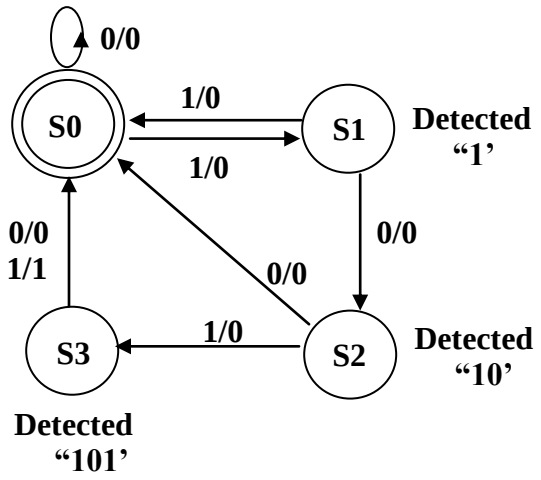

Type III Moore Machine Model
Reset on any incorrect sequence

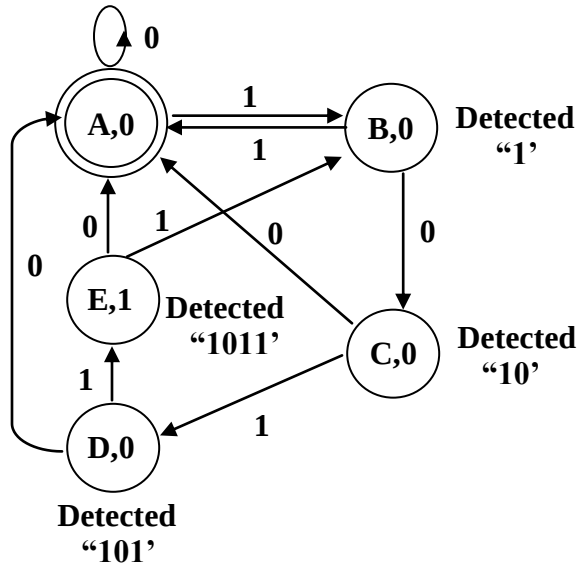

Type I **Mealy**: Overlapped sequence allowed

overlapped

Input x	0	0	1	1	0	0	1	0	1	**1**	0	1	1	0	1	1	1
Clock																	
Next states Qs	S0	S0	S0	S1	S1	S2	S0	S1	S2	S3	S1	S2	S3	S1	S2	S3	S1
Output Z	0	0	0	0	0	0	0	0	0	**1**	0	0	**1**	0	0	**1**	0

Type II **Mealy**: Overlapped sequence **NOT** allowed

Input x	0	0	1	1	0	0	1	0	1	1	0	1	1	0	1	1	1
Clock																	
Next states Q	S0	S0	S0	S1	S1	S2	S0	S1	S2	S3	S0	S0	S1	S1	S2	S3	S0
Output Z	0	0	0	0	0	0	0	0	0	**1**	0	0	0	0	0	**1**	0

Type I **Moore**: Overlapped sequence allowed

Input x	0	0	1	1	0	0	1	0	1	**1**	0	1	1	0	1	1	1
Clock																	
Next states Qs	A	A	A	B	B	C	A	B	C	D	E	C	D	E	C	D	E
Output Z	0	0	0	0	0	0	0	0	0	0	**1**	0	0	**1**	0	0	**1**

Type II **Moore**: Overlapped sequence NOT allowed

Input x	0	0	1	1	0	0	1	0	1	1	0	1	1	0	1	1	1
Clock																	
Next states Q	A	A	A	B	B	C	A	B	C	D	E	A	B	B	C	D	E
Output Z	0	0	0	0	0	0	0	0	0	0	**1**	0	0	0	0	0	**1**