Programmable flipflops with individual clear, preset, clock, and clock enable controls
5-ns pin-to-pin logic delays with up to 178.6-MHz counter frequencies (including interconnect).
Shared Expanders and Parallel Expanders.
Each LAB has 16 shareable expanders (one uncommitted single product term from each macrocell)
Parallel expanders allow up to 20 product terms to directly feed the macrocell OR logic, with 5 product terms provided by the macrocell and 15 parallel expanders provided by neighboring macrocells in the LAB.
MAX 7000S devices include:
JTAG boundary-scan test (BST) circuitry.
Joint Test Action Group (JTAG) interface for 5.0-V In-System Programmability (ISP).
Open-drain output option

Table 1. MAX 7000 Device Features *Note (1)*

Feature	EPM7032 EPM7032V EPM7032S	EPM7064 EPM7064S	EPM7096	EPM7128E EPM7128S	EPM7160E EPM7160S	EPM7192E EPM7192S	EPM7256E EPM7256S
Usable gates	600	1,250	1,800	2,500	3,200	3,750	5,000
Macrocells	32	64	96	128	160	192	256
Logic array blocks	2	4	6	8	10	12	16
Maximum user I/O pins	36	68	76	100	104	124	164
t_{PD} (ns)	6 (12)	5	7.5	6	6	7.5	7.5
t_{SU} (ns)	5 (10)	4	6	5	5	6	6
t_{FSU} (ns)	2.5 (n/a)	2.5	3	2.5	2.5	3	3
t_{CO1} (ns)	4 (7)	3.5	4.5	4	4	4.5	4.5
f_{CNT} (MHz)	151.5 (90.9)	178.6	125	151.5	151.5	125	125

Figure 1. EPM7032, EPM7032V, EPM7064 & EPM7096 Device Block Diagram

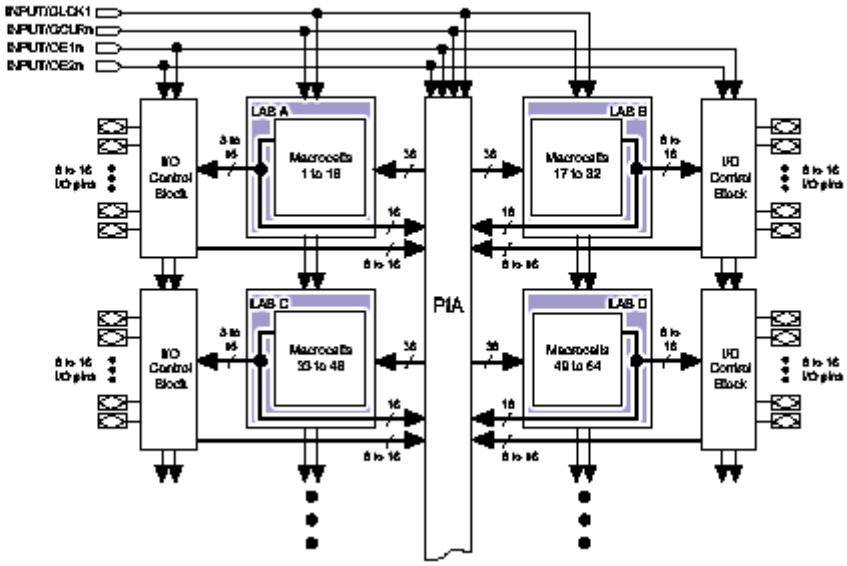

Five uncommitted prod terms from each neigbor macrocell (total 15)

Figure 3. EPM7032, EPM7032V, EPM7064 & EPM7096 Device Macrocell

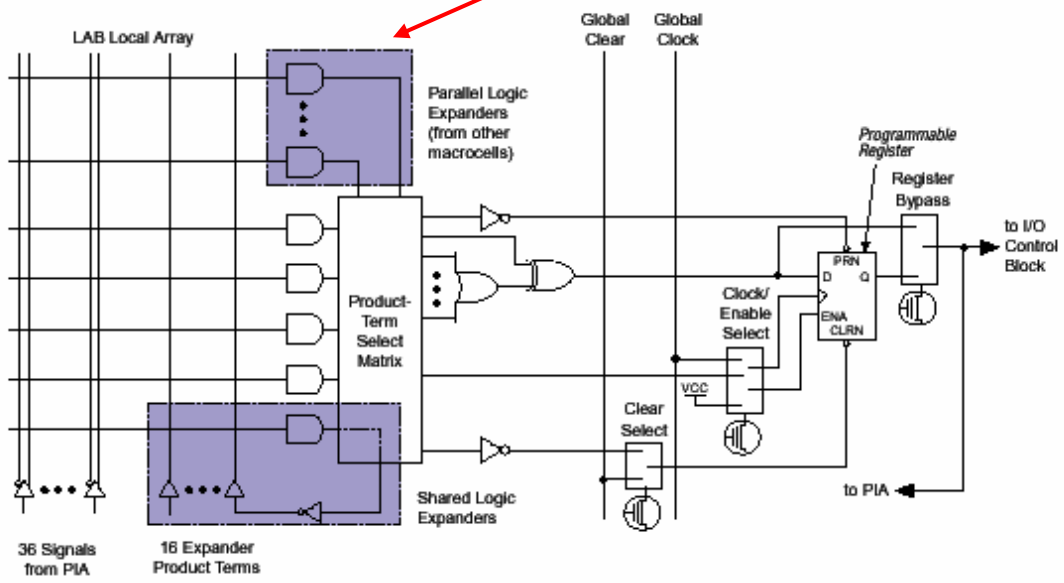

Figure 5. Shareable Expanders

Shareable expanders can be shared by any or all macrocells in an LAB.

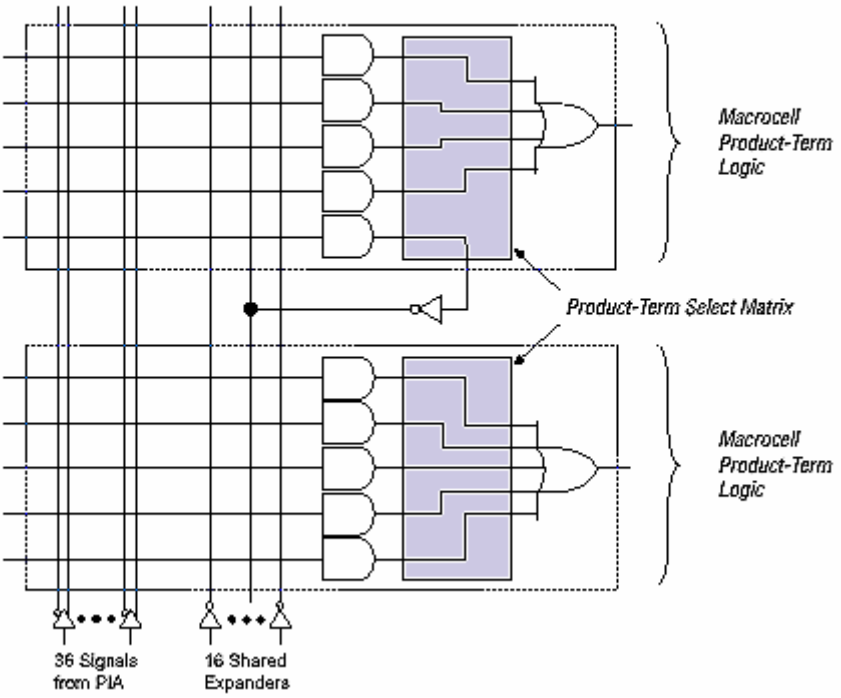

Figure 6. Parallel Expanders

Unused product terms in a macrocell can be allocated to a neighboring macrocell.

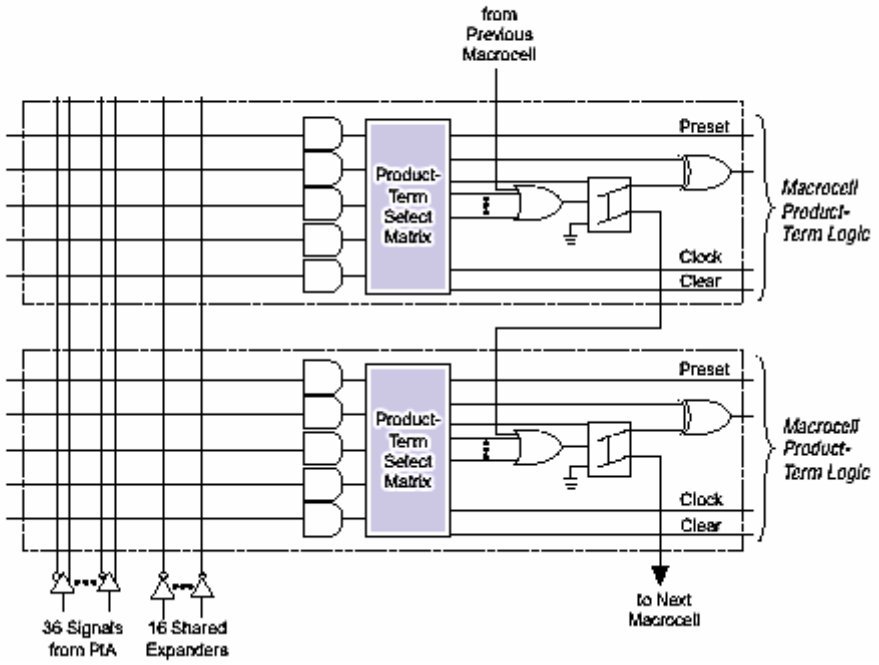

Figure 7. PIA Routing

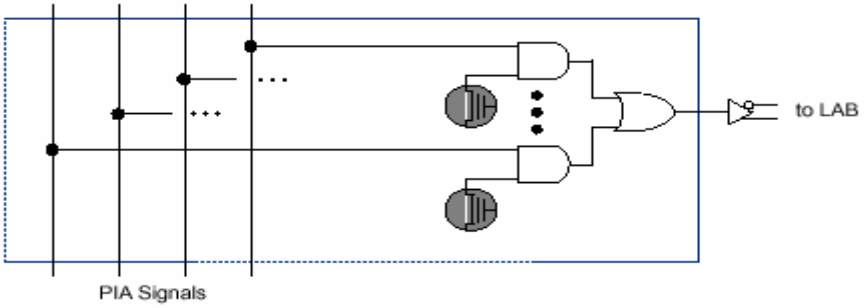

EPM7032, EPM7032V, EPM7064 & EPM7096 Devices

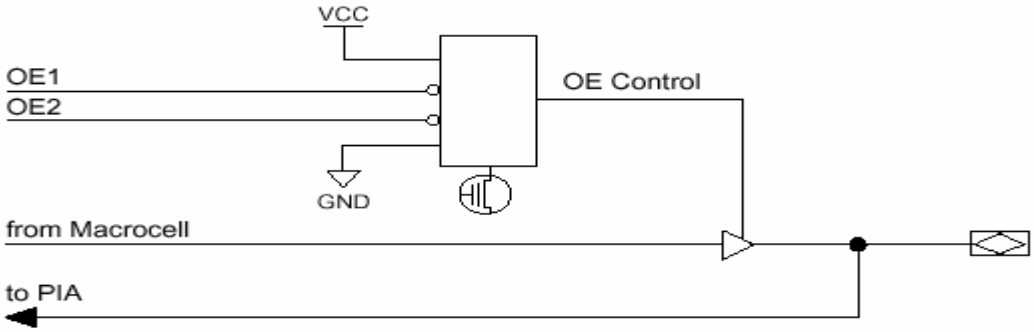

MAX 7000 Programmable Logic Device Family Data Sheet

Figure 14. MAX 7000 Timing Model

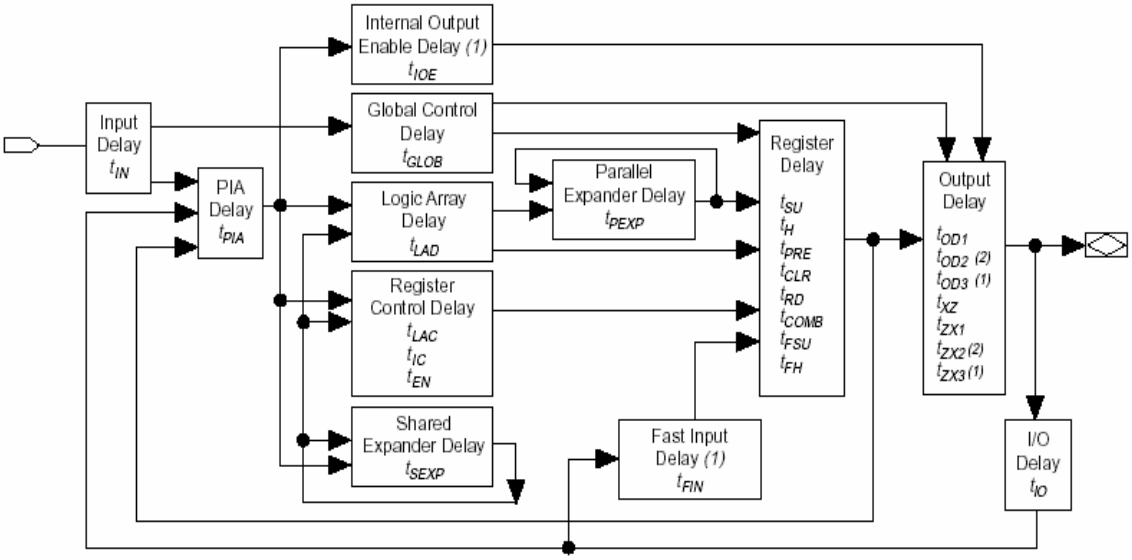

Notes:

(1) Only available in MAX 7000E and MAX 7000S devices.

(2) Not available in 44-pin devices.

Figure 9. MAX 7000 JTAG Waveforms

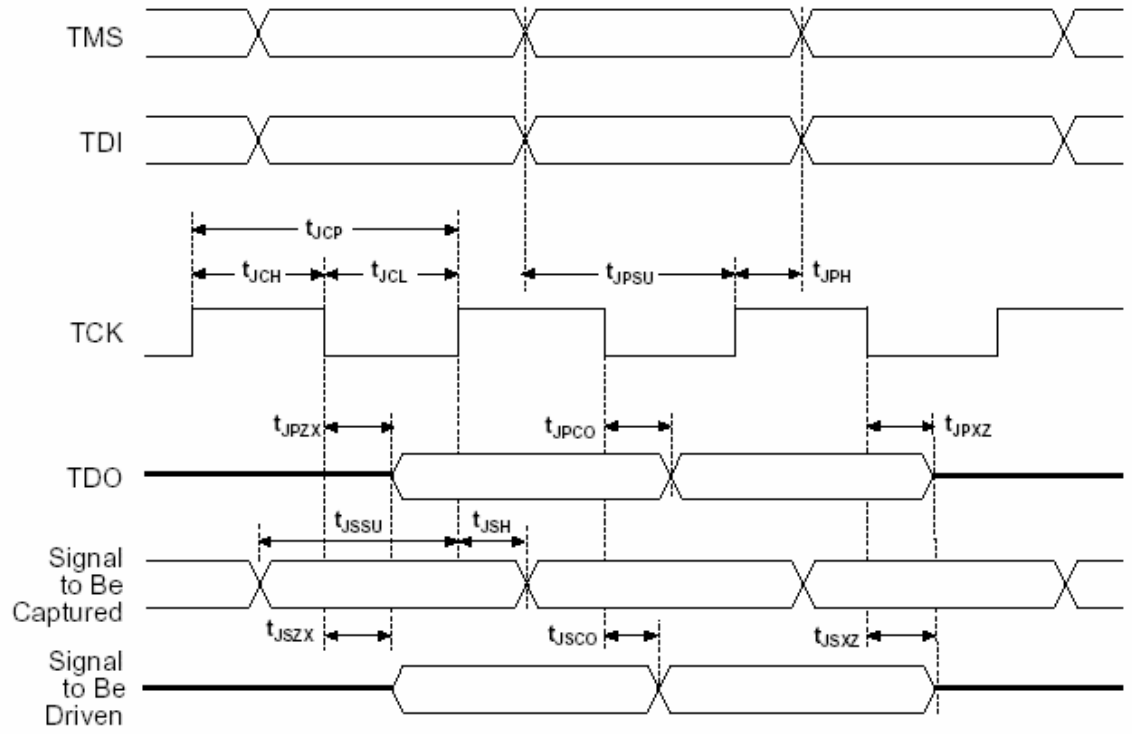

Internal Timing Parameters			Speed Grade						
			-5		-6		-7		
Symbol	**Parameter**	**Conditions**	**Min**	**Max**	**Min**	**Max**	**Min**	**Max**	**Unit**
t_{IN}	Input pad and buffer delay			0.4		0.4		0.5	ns
t_{IO}	I/O input pad and buffer delay			0.4		0.4		0.5	ns
t_{FIN}	Fast input delay	*Note (3)*		0.8		0.8		1	ns
t_{SEXP}	Shared expander delay			3		3.5		4	ns
t_{PEXP}	Parallel expander delay			0.8		0.8		0.8	ns
t_{LAD}	Logic array delay			1.5		2		3	ns
t_{LAC}	Logic control array delay			1.5		2		3	ns
t_{IOE}	Internal output enable delay	*Note (3)*						2	ns
t_{OD1}	Output buffer and pad delay Slow slew rate = off, V_{CCIO} = 5.0 V	C1 = 35 pF		1.5		2		2	ns
t_{OD2}	Output buffer and pad delay Slow slew rate = off, V_{CCIO} = 3.3 V	C1 = 35 pF, *Note (7)*		2.0		2.5		2.5	ns
t_{OD3}	Output buffer and pad delay Slow slew rate = on, V_{CCIO} = 5.0 V or 3.3 V	C1 = 35 pF, *Note (3)*		6.5		7		7	ns
t_{ZX1}	Output buffer enable delay Slow slew rate = off, V_{CCIO} = 5.0 V	C1 = 35 pF		4		4		4	ns
t_{ZX2}	Output buffer enable delay Slow slew rate = off, V_{CCIO} = 3.3 V	C1 = 35 pF, *Note (7)*		4.5		4.5		4.5	ns
t_{ZX3}	Output buffer enable delay Slow slew rate = on V_{CCIO} = 5.0 V or 3.3 V	C1 = 35 pF, *Note (3)*		9		9		9	ns
t_{XZ}	Output buffer disable delay	C1 = 5 pF		4		4		4	ns
t_{SU}	Register setup time		2.5		3		3		ns
t_{H}	Register hold time		1.5		1.5		2		ns
t_{FSU}	Register setup time of fast input	*Note (3)*	2.5		2.5		3		ns
t_{FH}	Register hold time of fast input	*Note (3)*	0.5		0.5		0.5		ns
t_{RD}	Register delay			0.8		0.8		1	ns
t_{COMB}	Combinatorial delay			0.8		0.8		1	ns
t_{IC}	Array clock delay			2		2.5		3	ns
t_{EN}	Register enable time			1.5		2		3	ns
t_{GLOB}	Global control delay			0.8		0.8		1	ns
t_{PRE}	Register preset time			2		2		2	ns
t_{CLR}	Register clear time			2		2		2	ns
t_{PIA}	PIA delay			0.8		0.8		1	ns
t_{LPA}	Low-power adder	*Note (8)*		8		10		10	ns