Quartus Tutorial: Half Adder Design GLaw

Schematic Design Entry Method with Quartus Graphical Simulation

Notation:

To simplify what one should click to perform a task, the following form of notation will be used:

Menu item → Menu item → … → Menu item

Example:

File → Project Wizard means "on the File menu, click New Project Wizard"

Objective

To learn to use Quartus to develop and simulate a half adder using Schematic Design Entry Method

Development Tools

Quartus Version 9 or lower!

Hardware

DE2 board, USB Blaster, and USB cable.

References

Altera Quartus Handbooks Volume 1, 2, and 3 available at www.altera.com or at the course website www.csun.edu/~glaw

Launch Quartus II Software

1. Launch the Quartus II software.
2. File → Project Wizard (on the File menu, click New Project Wizard)
3. New Project Wizard: Introduction windows appears. It shows you the five steps you may need to go through in setting up a new project. You have nothing to do in this window, hence click **Next**.
4. New Project Wizard: Directory, Name, Top-Level Entity window appears.

   a. Enter the working project directory in your Z drive, for example, z:\...\Tutorial01A

   b. Enter project name: HalfAdder. As you type HalfAdder name, Top-Level Entity name will be automatically filled with HalfAdder.

   c. Click next. When asked to create z:\...\Tutorial01A directory, click **Ye**s.
5. New Project Wizard: Add Files window appears. You have no files to add now. Hence, just click **Next**.

6. New Project Wizard: Family & Device Settings window appears.
   Scroll up/down the family choices and choose Cyclone II family. Scroll up/down the available devices and choose EP2C35F672C6. Leave other options as they are. Click **Finish**.

Create a Half Adder

1. File → New. New file option window appears.
2. Select Block Diagram/ Schematic File. Click OK. BDF Editor window appears.
3. Double click anywhere on the window. Select Symbol window appears.
4. Type xor in the Name box. Click Ok. Drag the XOR symbol and put it in the middle of the window.
5. Repeat steps 3 and 4 but with and2 symbol name to put a 2-input AND symbol at the bottom of the XOR symbol.
6. Input ports and output ports are symbols with names "input" and "output", respectively. Thus, repeat steps 3 and 4 with symbol name "input" and "output" to put two input ports and two output ports on the window. Click and drag the symbols on the window to match the BDF diagram shown below.

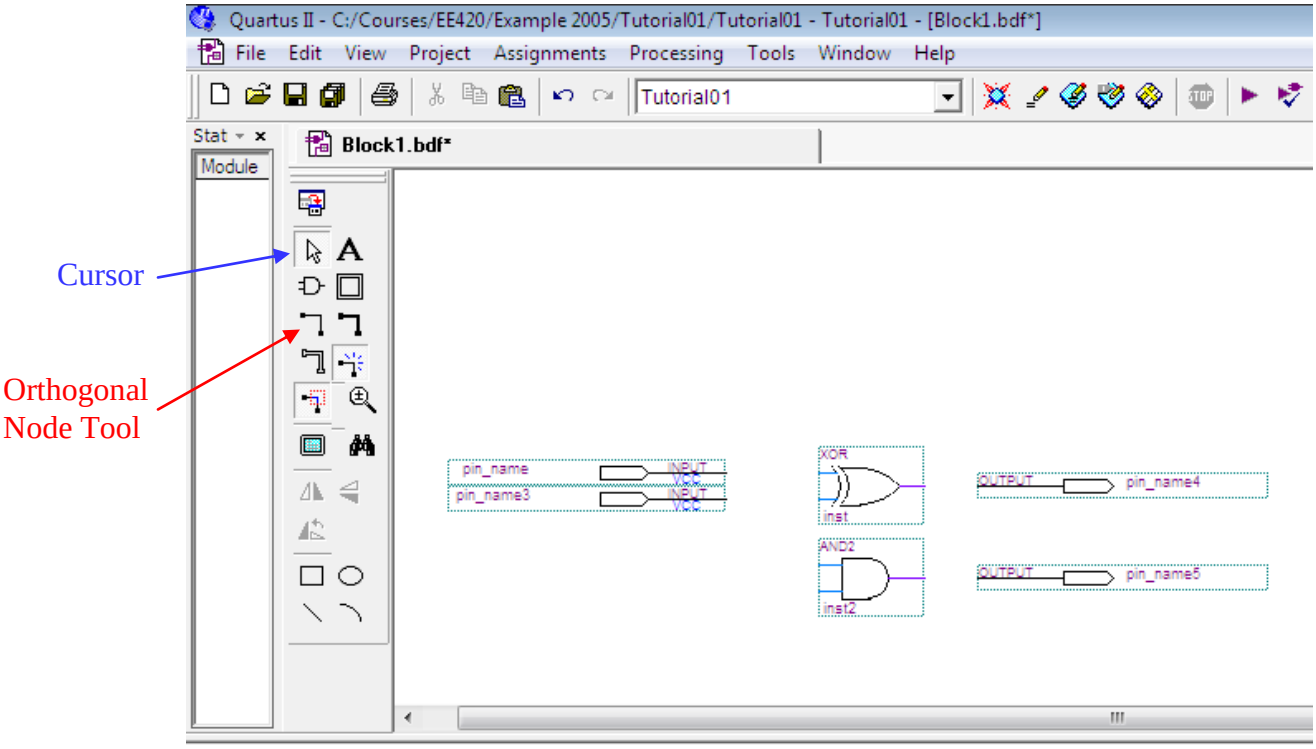

7. Click the orthogonal node tool in the list of tool on the left of the BDF window (see above). To connect point A to point B, position the cursor on point A, click and hold the left button of the mouse, drag the line and drop it at point B.

   Example: To connect input symbol to the XOR symbol input, position the cursor on the right end point of the input symbol, click and hold the left mouse button, drag the line and drop it on the input of the XOR symbol.

   Follow the steps above connect the input symbols and the output symbols to the XOR and AND symbols.

8. Click the cursor in the list of tool on the left of the BDF window (see above). Double click the input symbol and change the input name to X. Double click the other input symbol and change the input name to Y. Repeat the steps to name the output names to SUM and COUT, respectively.

   Now, your bdf file must look similar to the one shown below:

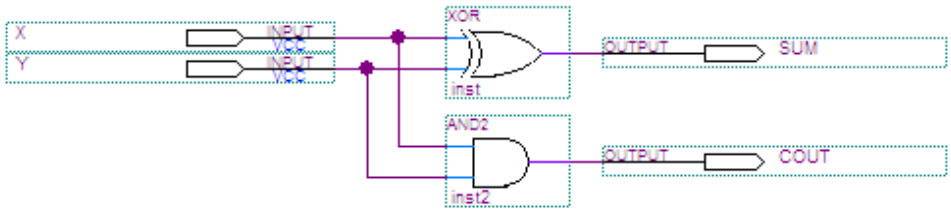

   To help you in identifying erroneous line connection, an example is shown below:

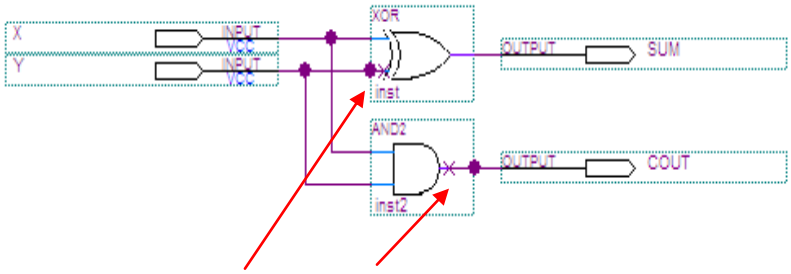

   The errors could be identified as “x” on the lines. If you see these “x”s, delete the lines and redraw them.

9. Double click anywhere on the window. Select Symbol window appears.

10. Type title in the Name box. Click Ok. Drag the title symbol and put it the lower right-hand part of the window

11. Double click the title symbol, the title block properties window appears. Click any field that you want to modify and change the value. As an example, click on Designer and change the value to your name.

12. Save the bdf file as HalfAdder.bdf, the same name you used as the project name with bdf extension.

Compile the half adder

Processing → Start Compilation. If there is errors in the message window, fix the errors and compile the design again. Ignore the warnings.

Simulate the half adder (Timing Simulation)

1. File → New. New file option window appears.
2. Click Other Files tab and select Waveform Vector File. Click Ok. Waveform Vector File (wvf) windows appears.
3. Left click anywhere in the Name pane (left of vwf window) and click Insert → Insert Node or Bus. Insert Node or Bus window appears.
4. Click Node Finder. Node Finder window appears.
5. Select Pins: all in the Filter selection box and click List. Move all signals from the left pane (Nodes Found) to the right pane (Nodes Selected) by clicking >>. Click OK. On the Insert Node or Bus window click OK again. The vwf window appears.
6. Arrange the signals in the Name pane in logical order: COUT, SUM, Y, X where COUT is at the top. To move the signal up or down, select the signal, click and drag it up or down. This arrangement allows you to read the output easier.
7. Right click on Y and Value → Count Value. Count Value window appears. Click Timing tab and change Count Every value to 20 ns. Click OK.
8. Right click on X and Value → Count Value. Count Value window appears. Click Timing tab and change the Multiplied by value to 2. Click OK. If you have another input to set, say in a design that has four inputs, the multiplied by values must be set 2 times higher that the lesser significant input.
9. View → Zoom Out as many times as necessary so that you could see all possible combinations of X and Y up to 80 ns.

   Your HalfAdder.vwf file must look similar to the one shown below. If there is a mismatch, go back to the previous steps to fix the errors.

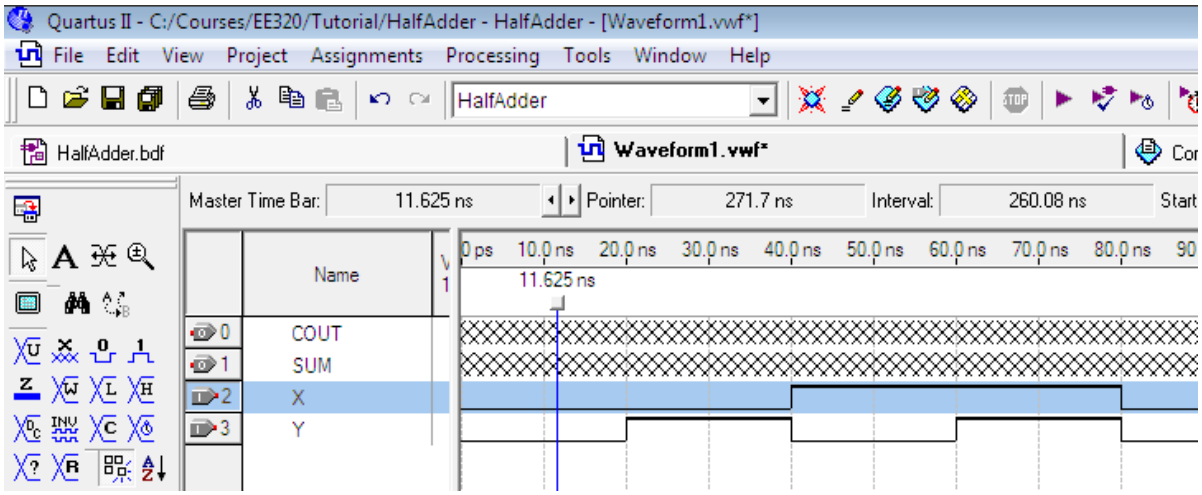

10. Save your HalfAdder.vwf file.
11. First, you will do the timing simulation where you can see the signal delay from inputs to outputs (Simulation mode: Timing). Processing → Simulator Tool. Simulator Tool window appears. Check the Overwrite simulation input file with simulation results box. Click Start. If you do not see the Start button, close the message window at the bottom.
12. If the simulation is successful, click Open to open the vwf file and see the result of simulation. If you do not see the Open button, close the message window at the bottom.
13. Check the result of simulation and take notes of the delay and glitch.

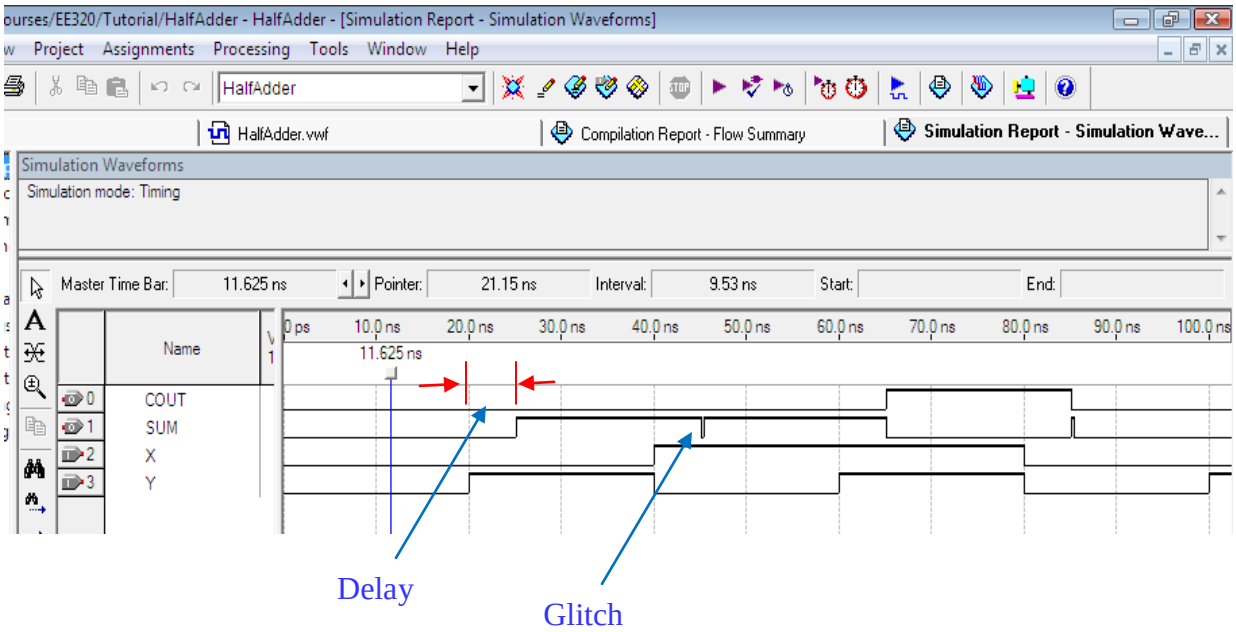

Simulate the half adder (Functional Simulation)

1. Now, you will do the functional simulation where all output signals change (if any) at the same time at the same time as the input signals. Processing → Simulator Tool. Simulator Tool window appears. Select Functional in the Simulation mode list. Click Generate Functional Simulation Netlist. When the compilation is completed, click Start. If you do not see the Start button, close the message window at the bottom. Note that the compilation should not have any errors because you have compiled the design successfully for the timing simulation earlier.
2. If the simulation is successful, click Open to open the vwf file and see the result of simulation. If you do not see the Open button, close the message window at the bottom.
3. Check the result of simulation and take notes of the zero-time delay.

The following steps are for testing the design with the DE2 Board. Skip these steps if you have no access to the DE2 board.

Pins Assignments for DE2 Board

1. Assignments → PINs (Click PINs under Assignments)
2. Double click the blank box under Location for each of the pin names in the Table below and select the respective pin numbers. For example, to set pin number for Y. Double click the blank box under Location for Y node name and select PIN_N25.
3. Click OK.

Pin Assignment Table

DE2 Board Component Names	Half Adder Signal Names	Pin Numbers
SW[1]	X	PIN_N26
SW[0]	Y	PIN_N25
LEDR[1]	COUT	PIN_AF23
LEDR[0]]	SUM	PIN_AE23

Fit the Project to FPGA

To launch Fitter, click Processing → Start → Start Fitter.

Assemble Project

Assembler will generate the programming files (files used to configure the FPGA. For Cyclone II, it is the .sof file)

To launch Assembler, click Processing → Start → Start Assembler.

Downloading a Hardware Image to the FPGA Cyclone II 2C35F672C6

To download the HalfAdder.sof File to the DE2 board, follow these steps:

1. On the Tools menu, click **Programmer**.
2. Click **Hardware Setup**.
3. Select **USB-Blaster** in the **Currently selected hardware** list and click **Close**.
4. Turn on (check) **Program/Configure,** located on the same row as HalfAdder**.sof**.
5. Click **Start**.
6. Upon download success, the Messages window will display "Info: successfully performed operation(s)." If you do not see this message, check your cable connections and the Quartus II Programmer hardware setup.
7. Close the **Programmer**.

Verify half adder (Hardware verification)
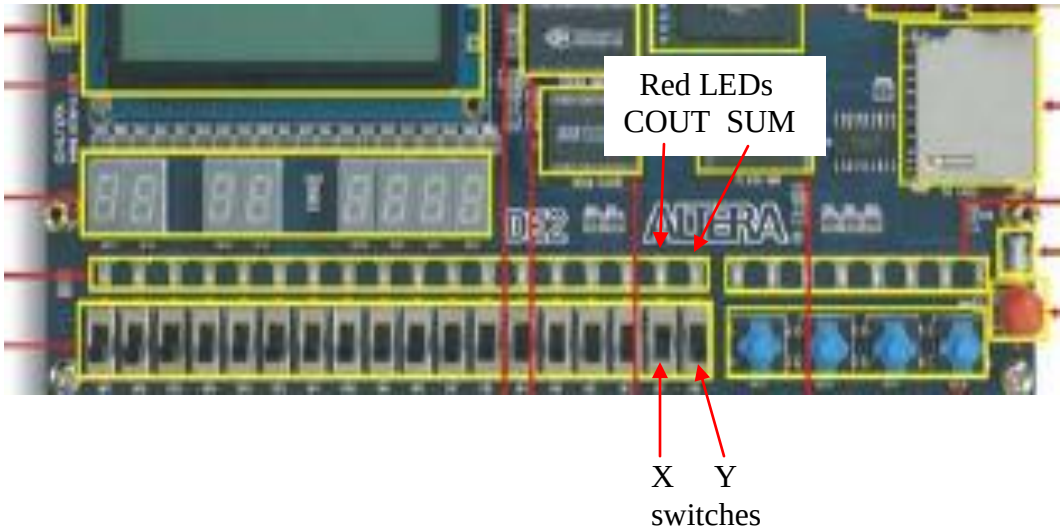
Close and open SW1, and SW0 to give 4 possible combinations. For each combination, check the LEDR1, and LEDR0 if they match the truth table for a half adder.