Hardware Optimization:

1A.
```
PROCESS (A,B,C,D, s)
BEGIN
   IF(s = 0) THEN
         Sum <= A + B;
   ELSE
         Sum <= C + D;
   END IF;
END PROCESS;
```

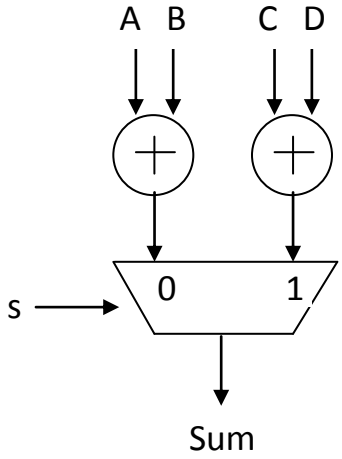

<u>Resources</u>
Two Adders
One Mux

Also applies to
*, /, - etc. operators

1B.
```
PROCESS (A,B,C,D, s)
      v1, v2 : STD_LOGIC_VECTOR(31 DOWNTO 0);
BEGIN
   IF(s = 0) THEN
         v1 := A;
         v2 := B;
   ELSE
         v1 := C;
         v2 := D;
   END IF;
    Sum <= v1 + v2;
END PROCESS;
```

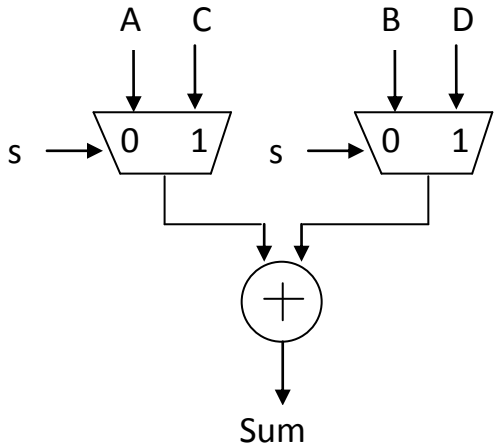

<u>Resources</u>
One Adder
Two Muxes

2A.
```
PROCESS (A,B,C)
BEGIN
   S1 <= A + B + C;
   S2 <= A + B - C;
END PROCESS;
-- operators could be *, /, +, - etc
```

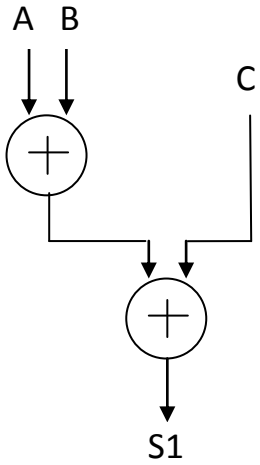

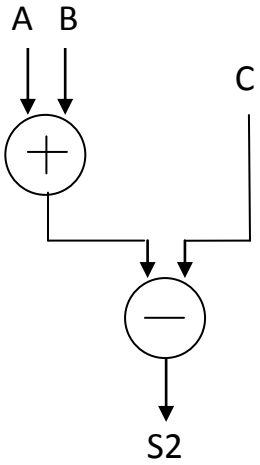

2B.
```
PROCESS (A,B,C,D, s)
    v1 : STD_LOGIC_VECTOR(31 DOWNTO 0);
BEGIN
    v1 := A + B;
    S1 := v1 + C;
    S2 := v1 - C;
END PROCESS;
```

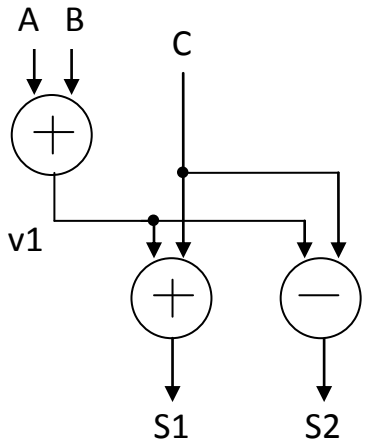

3.
```
--NOT for Synthesis
PROCESS (A, B, C, D,)
BEGIN
    S1 <= A + B + C + D;
--better coding than S1 above
    S2 <= (A + B) + (C + D);
END PROCESS;
```

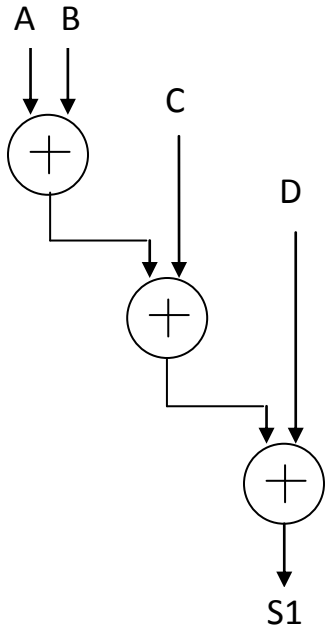

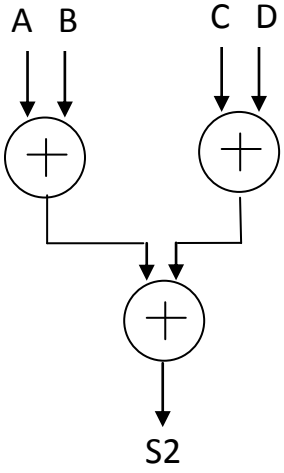

4A.
```
--NOT for Synthesis
PROCESS (clk1, clk2)
BEGIN
    IF(clk1'EVENT AND clk1 = '1') THEN
        IF(clk2'EVENT AND clk2 = '1') THEN
            q <= d;
        END IF;
    END IF;
END PROCESS;
```

4B.
```
--OK for Synthesis
PROCESS (clk1, clk2)
BEGIN
    IF(clk1'EVENT AND clk1 = '1') THEN
        . . .
    END IF;
    IF(clk2'EVENT AND clk2 = '1') THEN
        . . .
    END IF;
END PROCESS;
```