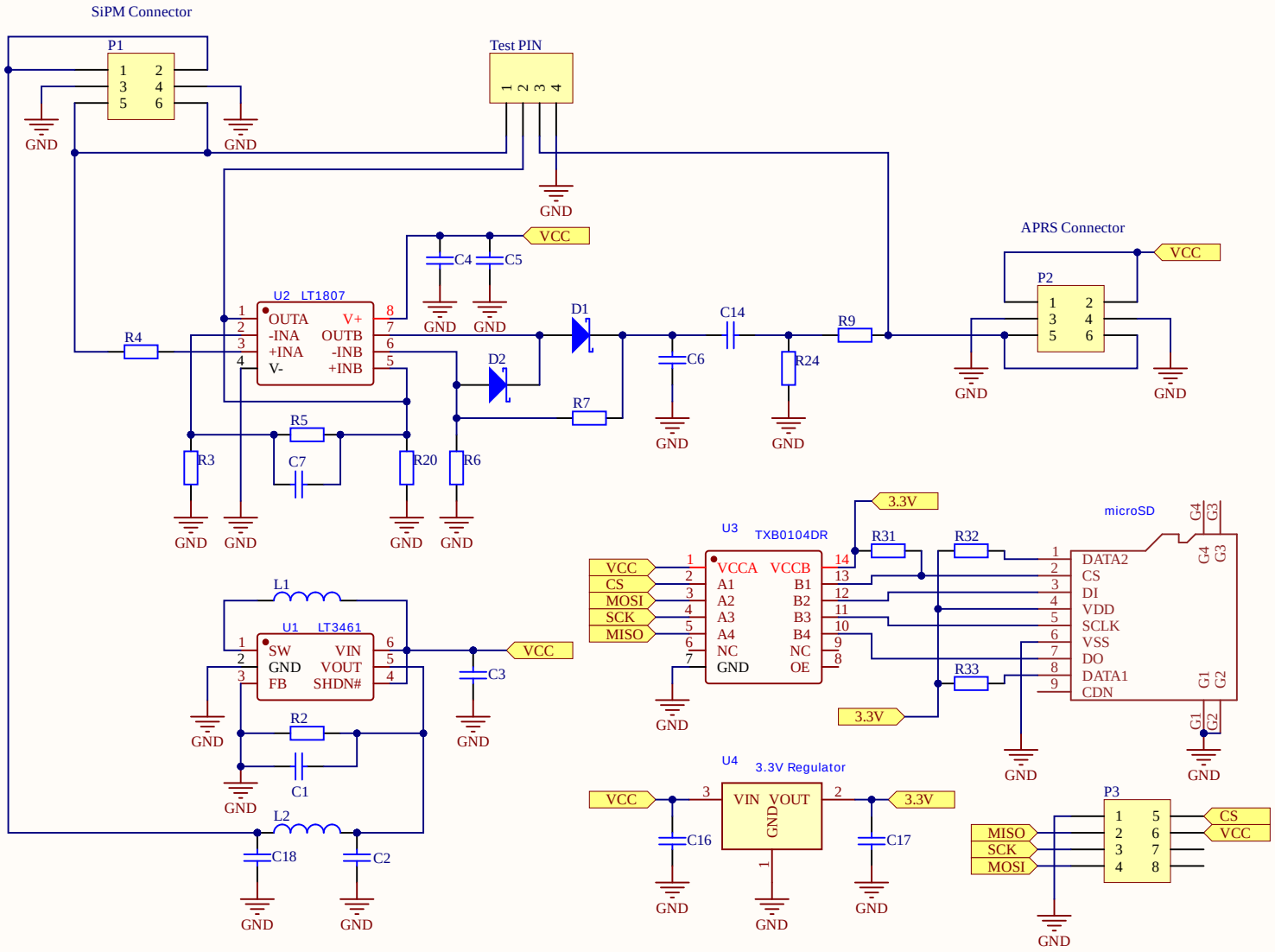

Title		
Size A4	Number Hongyi Hu	Revision
Date: 12/25/2022	Sheet of	
File: D:\Arduino\AD\CosmicWatchMain.SchDoc	Drawn By:	