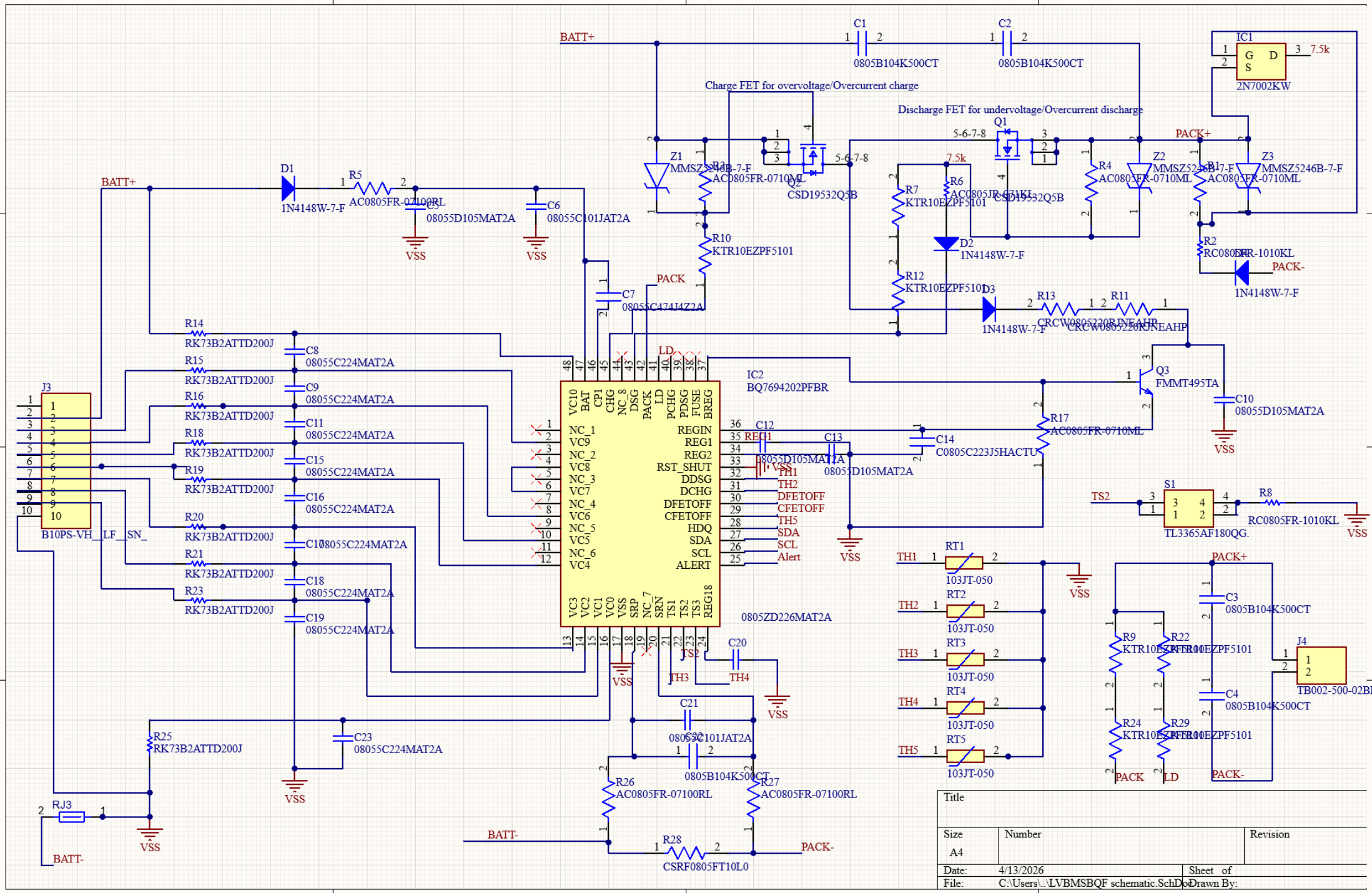
BATT+
C1
0805B104K500CT
C2
0805B104K500CT
IC1
2N7002KW
7.5k
Charge FET for overvoltage/Overcurrent charge
Discharge FET for undervoltage/Overcurrent discharge
Q1
CSD19532Q5B
Q2
CSD19532Q5B
PACK+
Z1
MMSZ5246B-7-F
Z2
MMSZ5246B-7-F
Z3
MMSZ5246B-7-F
R3
AC0805FR-0710ML
R4
AC0805FR-0710ML
R6
AC0805FR-0710ML
R7
KTR10EZPF5101
R10
KTR10EZPF5101
R12
KTR10EZPF5101
D1
1N4148W-7-F
R5
AC0805FR-07100RL
C5
08055D105MAT2A
C6
08055C101JAT2A
VSS
D2
1N4148W-7-F
D3
1N4148W-7-F
R13
CRCW0805220RJNEAHP
R11
CRCW0805220RJNEAHP
R2
RC0805FR-1010KL
PACK-
C7
08055C474J4Z2A
PACK
LD
IC2
BQ7694202PFBR
Q3
FMMT495TA
C10
08055D105MAT2A
R17
AC0805FR-0710ML
C12
C13
C14
C0805C223J5HACTU
REG1
TH1
TH2
DFETOFF
CFETOFF
TH5
SDA
SCL
Alert
TS2
S1
TL3365AF180QG
R8
RC0805FR-1010KL
J3
B10PS-VH__LF__SN_
R14
RK73B2ATTD200J
R15
RK73B2ATTD200J
R16
RK73B2ATTD200J
R18
RK73B2ATTD200J
R19
RK73B2ATTD200J
R20
RK73B2ATTD200J
R21
RK73B2ATTD200J
R23
RK73B2ATTD200J
C8
08055C224MAT2A
C9
08055C224MAT2A
C11
08055C224MAT2A
C15
08055C224MAT2A
C16
08055C224MAT2A
C17
08055C224MAT2A
C18
08055C224MAT2A
C19
08055C224MAT2A
C23
08055C224MAT2A
R25
RK73B2ATTD200J
RJ3
BATT-
0805ZD226MAT2A
C20
TH3
TH4
C21
08055C101JAT2A
C22
0805B104K500CT
R26
AC0805FR-07100RL
R27
AC0805FR-07100RL
R28
CSRF0805FT10L0
PACK-
RT1
103JT-050
RT2
103JT-050
RT3
103JT-050
RT4
103JT-050
RT5
103JT-050
C3
0805B104K500CT
C4
0805B104K500CT
R9
KTR10EZPF5101
R22
KTR10EZPF5101
R24
KTR10EZPF5101
R29
KTR10EZPF5101
J4
TB002-500-02BE
PACK
LD
Title
Size
A4
Number
Revision
Date:
4/13/2026
Sheet of
File:
C:\Users\..\LVBMSBQF schematic.SchDoc
Drawn By: