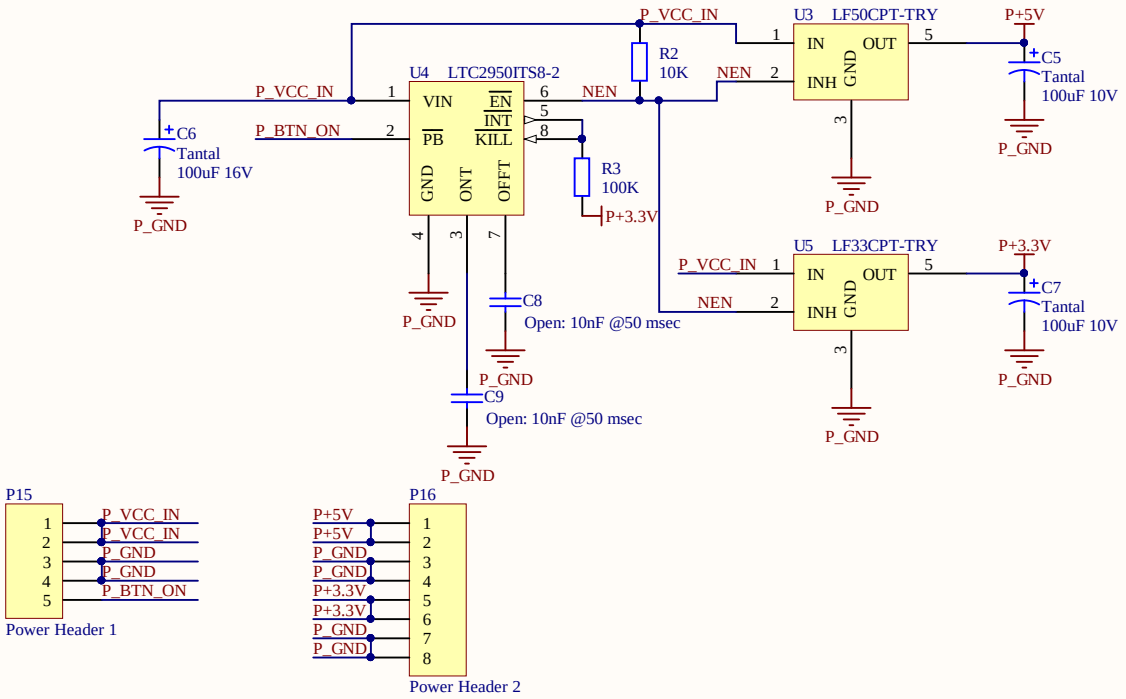

Title	KaRadio32 Power PCB	
Size A4	Number 3	Revision v.0.9
Date: 19.08.2018		Sheet of 3
File: D:\FM Radio\..\karadio.power.SchDoc		Drawn By: © eMax, 2018