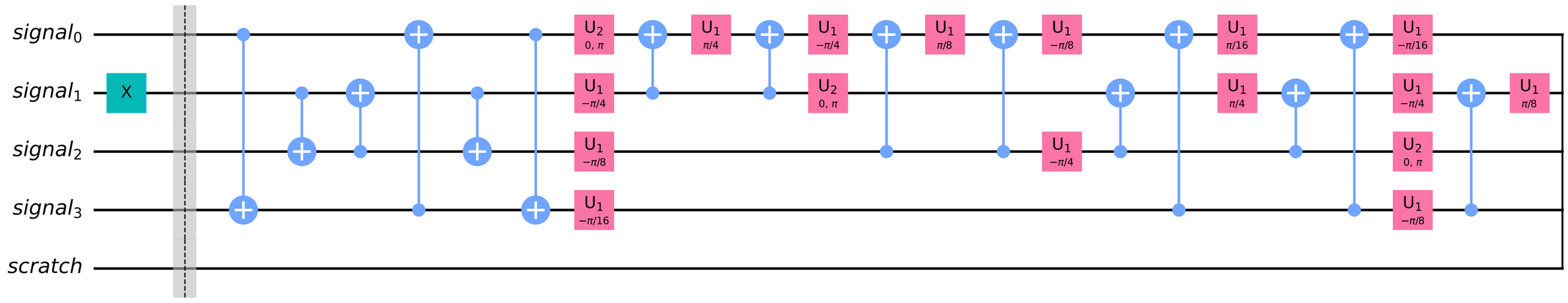
signal0
signal1
signal2
signal3
scratch
X
U2 0, π
U1 −π/4
U1 −π/8
U1 −π/16
U1 π/4
U1 π/8
U1 π/16

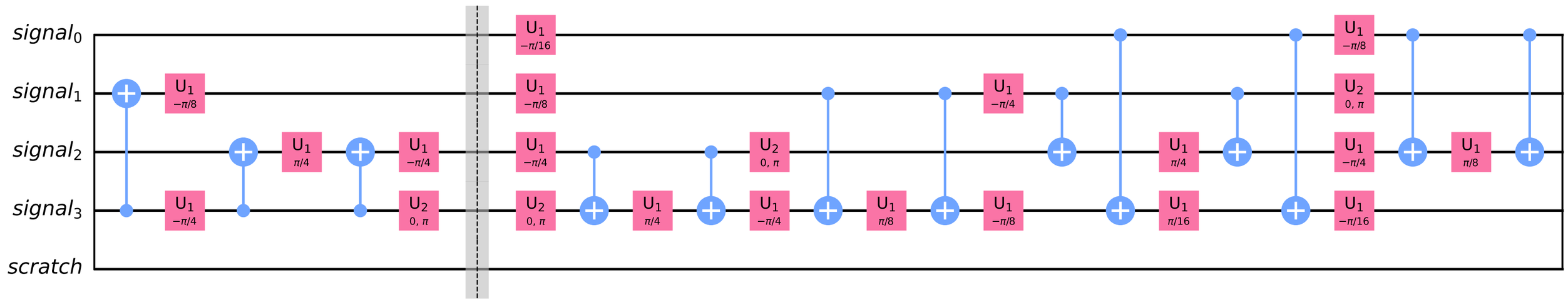
signal0
signal1
signal2
signal3
scratch
U1 −π/8
U1 −π/4
U1 π/4
U2 0, π
U1 −π/16

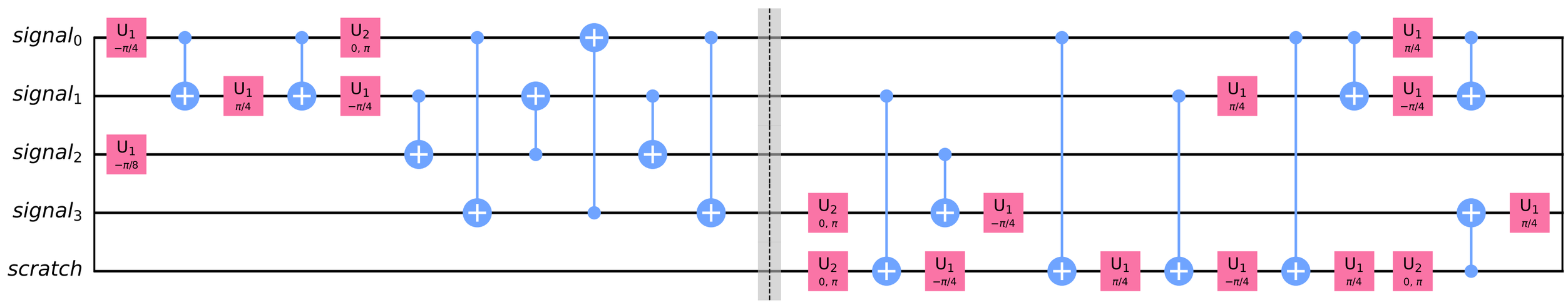
signal0
signal1
signal2
signal3
scratch
U1 −π/4
U1 −π/8
U2 0, π
U1 π/4

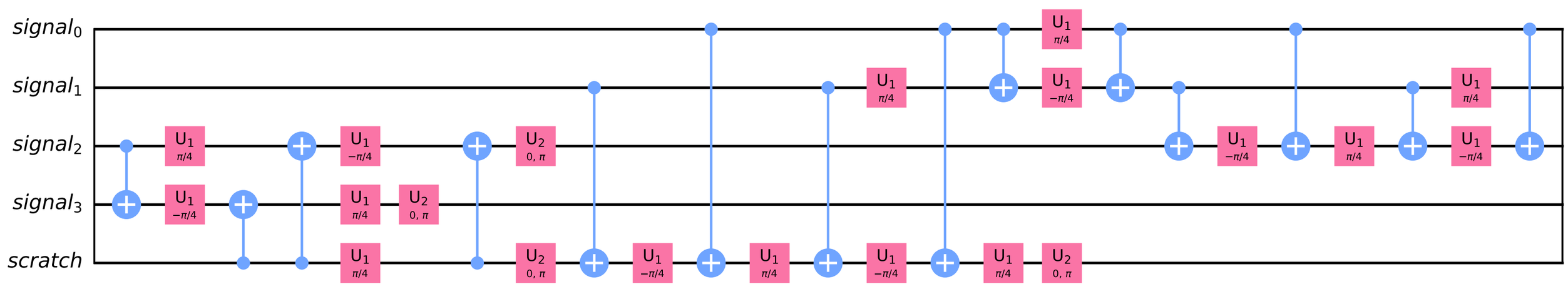
signal0
signal1
signal2
signal3
scratch
U1 π/4
U1 −π/4
U2 0, π
U1 −π/8

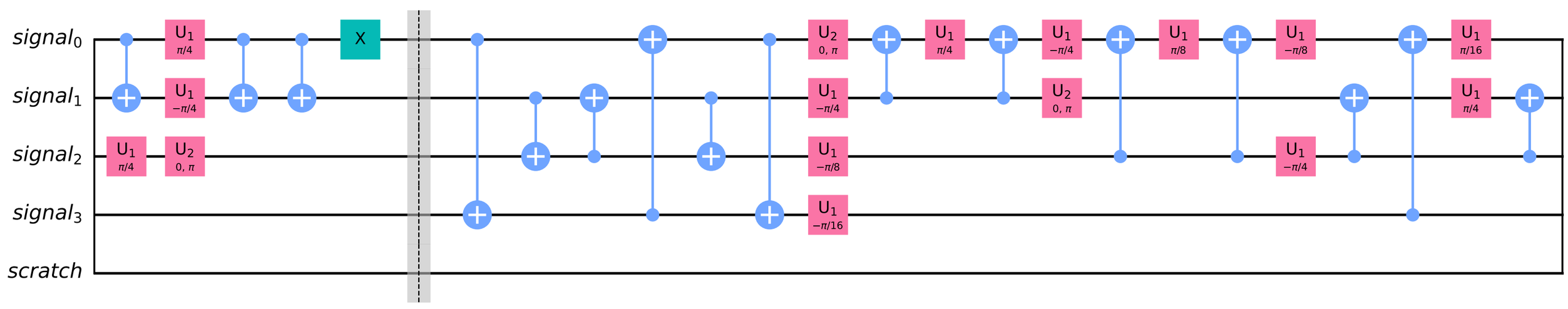
signal0
signal1
signal2
signal3
scratch
X
U1 π/4
U1 −π/4
U2 0, π
U1 −π/8
U1 −π/16

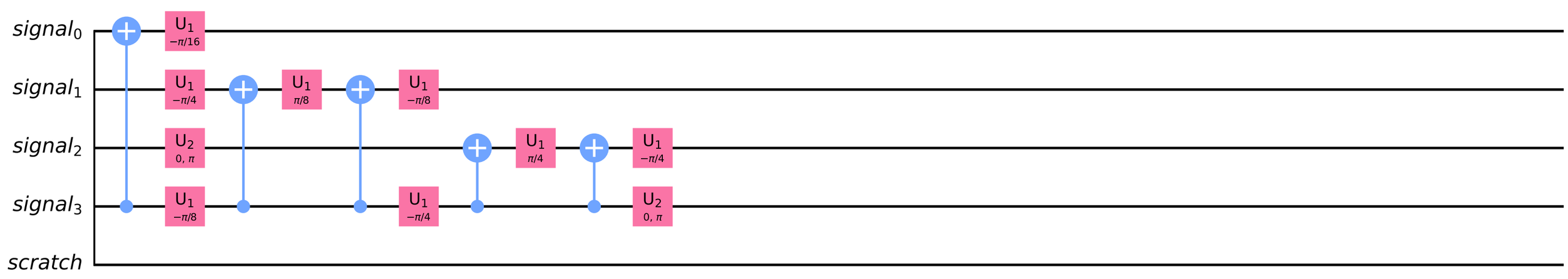
signal0
signal1
signal2
signal3
scratch
U1 −π/16
U1 −π/4
U1 π/8
U1 −π/8
U2 0, π
U1 π/4
U1 −π/4