TDS-GCN: Time-aware Dual-sign Graph Convolutional Network for Collaborative Filtering

Chongyang He [*1] **Qianke Chen** [*1] **Zicong Ou** [*1]

Abstract

Recommender systems have become indispensable in addressing information overload by delivering personalized content to users. Recent developments in Graph Neural Networks have substantially advanced collaborative filtering through effective modeling of high-order relations between users and items. However, most existing GNN-based CF models are limited by two key factors: (1) they focus solely on positive interactions while overlooking negative feedback that reflects users' implicit dislikes, and (2) they fail to consider the temporal evolution of user preferences. To overcome these limitations, we propose a novel framework, Time-aware Dual-sign Graph Convolutional Network (TDS-GCN), which integrates both the polarity and temporal dynamics of user–item interactions. Specifically, TDS-GCN constructs separate positive and negative adjacency matrices with temporal decay factors to emphasize recent interactions, and employs learnable affinity matrices to adaptively balance their contributions. By jointly capturing dual-sign feedback and temporal patterns, our model learns more expressive user and item representations. Extensive experiments on Yelp benchmark dataset demonstrate that TDS-GCN consistently outperforms state-of-the-art baselines, validating the effectiveness of incorporating signed and temporal information in graph-based recommendation.

1. Introduction

Recommender systems play a crucial role in mitigating information overload by providing personalized suggestions to users (Ricci et al., 2011). Recent advances in graph neural networks (GNNs) have significantly improved collaborative filtering (CF) by modeling high-order connectivity among users and items (He et al., 2020; Wang et al., 2019).

Despite their remarkable performance, most existing GNN-based CF models construct the user–item interaction graph using only positive feedback (e.g., clicks or high ratings), while ignoring negative interactions that may convey complementary preference information (Chen et al., 2024). However, users' behaviors are inherently dual-signed — positive interactions represent explicit preferences, whereas negative ones reveal implicit avoidance or lower interest levels. Neglecting the latter leads to biased representations and suboptimal personalization(Huang et al., 2021).

Moreover, user preferences are not static. Temporal factors play a vital role in shaping users' decision patterns (Wu et al., 2019; Bonet et al., 2020). For instance, recent interactions often carry stronger signals of current interests than those from long ago. Nevertheless, conventional graph collaborative filtering methods treat all interactions equally, disregarding temporal recency and evolution dynamics. This time-insensitive design may result in outdated recommendations and reduced adaptability to users' changing behaviors.

To address these limitations, we propose a novel framework, **Time-aware Dual-sign Graph Convolutional Network for Collaborative Filtering (TDS-GCN)**, which simultaneously incorporates positive and negative feedback and models temporal dynamics in user–item interactions. Specifically, we construct two adjacency matrices that separately encode positive and negative interactions, and introduce corresponding temporal decay matrices to assign higher weights to more recent interactions. Furthermore, we design two learnable affinity matrices, $\mathbf{W}_p$ and $\mathbf{W}_n$, to adaptively fuse the contributions of positive and negative feedback, allowing the model to learn personalized sensitivities for different users and items. The resulting time-aware dual-sign adjacency matrix is then utilized for graph convolutional propagation to derive expressive user and item representations. Extensive experiments demonstrate that TDS-GCN consistently outperforms state-of-the-art baselines, validating the effectiveness of incorporating both interaction polarity and temporal dynamics into collaborative filtering.

2. Related Works

2.1. Graph-based Recommender Systems

Graph Neural Networks have demonstrated remarkable effectiveness in modeling user–item interactions by representing recommender systems as bipartite graphs (Kipf &

Welling, 2017; Hamilton et al., 2017). The pioneering work of NGCF (Wang et al., 2019) explicitly models high-order connectivity in user–item graphs, enabling information propagation through multiple layers to capture collaborative signals. Later, LightGCN (He et al., 2020) simplified the convolutional process by removing feature transformation and non-linear activation, revealing that the core of collaborative filtering lies in the graph structure itself rather than the feature transformation process. Subsequent research, such as DGCF (Wang et al., 2020), further disentangles user preferences into multiple latent factors, enhancing both interpretability and robustness. Despite their effectiveness, these approaches often overlook temporal dynamics or contextual dependencies, motivating the exploration of time-aware and context-enhanced graph modeling in recommendation.

Recent studies have extended GNN-based recommenders by incorporating additional contextual information. **Social-aware GNN models** (Fan et al., 2019) leverage users' social relationships to capture mutual influence among friends. By constructing dual graphs that jointly model user–social and user–item relations, these methods enable richer preference propagation and better reflect users' shared interests. **Knowledge-enhanced GNN models** (Huang et al., 2021) integrate external knowledge graphs, such as item categories or functional relations, to enrich semantic connections and alleviate data sparsity. These approaches expand the representational capacity of collaborative filtering by embedding structured knowledge into the graph learning process. Together, these extensions highlight the growing trend of augmenting traditional graph-based recommenders with multi-source contextual information.

2.2. Graph Transformers

The core challenge of sequential and graph-based recommendation lies in effectively capturing the temporal evolution of user preferences while modeling complex relational dependencies among entities. Early studies employed Recurrent Neural Networks (RNNs) and gating mechanisms to model temporal dependencies in user behavior sequences (Hidasi et al., 2016; Ma et al., 2019). Although these approaches successfully captured short-term interests, they struggled with long-range dependencies due to vanishing gradients and limited parallelization.

Inspired by the success of the Transformer architecture in sequence modeling (Vaswani et al., 2017), researchers introduced self-attention mechanisms to enhance the modeling of global dependencies in recommendation tasks. For example, SASRec (Kang & McAuley, 2018) adopted causal self-attention to prevent future information leakage and incorporated positional embeddings to encode temporal order, enabling the model to dynamically weigh historical interactions and efficiently process long sequences. Subsequent models such as STAMP (Liu et al., 2018) emphasized the fusion of short-term and long-term user interests through memory-based attention, improving adaptability to scenarios with frequent preference shifts.

Building on these advances, recent research has extended the self-attention paradigm to graph learning. Graph Transformers aim to jointly capture both local structural relations and long-range semantic dependencies without relying solely on neighborhood aggregation. Models such as Graphormer (Ying et al., 2021) and SAN (Dwivedi & Bresson, 2021) introduce positional encodings or distance-based bias terms to preserve graph topology within attention computation. Similarly, GTAN (Chen et al., 2022) incorporates structural attention into graph representation learning, significantly improving graph-level prediction performance. Despite their effectiveness, most existing Graph Transformer architectures focus on unsigned graphs, overlooking the polarity or sentiment of relations—an essential factor for signed networks and sentiment-aware recommendation scenarios. This limitation motivates the design of sign-aware and temporally adaptive graph models that can better capture the evolving and polarized nature of user–item interactions.

2.3. Signed Graph Representation Learning

Signed graphs extend traditional graph structures by introducing both positive and negative edges to represent trust/distrust, like/dislike, or friend/enemy relations. Early approaches, such as SiNE (Wang et al., 2017), model signed relationships using balance theory and energy-based optimization. Recent methods leverage graph neural architectures to capture complex signed dependencies, including SGNN (Derr et al., 2018) and CSNE (Mara et al., 2020). More advanced designs like SiGAT (Huang et al., 2019) integrate attention mechanisms to differentiate the importance of positive and negative neighbors. Despite these advancements, existing signed GNNs often treat edge polarity statically, neglecting the temporal evolution or context-aware factors, which motivates our work to incorporate time-sensitive decay functions and exogenous features into signed graph learning.

3. Preliminaries

In this section, we first introduce the notations and basic concepts used throughout our work. We then formally define the social recommendation problem that incorporates both user–item interactions and item relational knowledge.

3.1. Notations

Let $\mathcal{U} = \{u_1, u_2, \ldots, u_I\}$ denote the set of users and $\mathcal{V} = \{v_1, v_2, \ldots, v_J\}$ denote the set of items, where I and J are the total numbers of users and items, respectively. The

user–item interactions are represented by a bipartite graph $\mathcal{G}_{ui} = (\mathcal{U}, \mathcal{V}, \mathcal{E}_{ui})$, where an edge $(u_i, v_j) \in \mathcal{E}_{ui}$ indicates that user u_i has interacted with item v_j (e.g., clicked, rated, or purchased).

3.2. Social and Item Relational Graphs

In addition to user–item interactions, users may have social connections that can be modeled as a social graph $\mathcal{G}_{uu} = (\mathcal{U}, \mathcal{E}_{uu})$. An undirected edge $(u_i, u_k) \in \mathcal{E}_{uu}$ represents that users u_i and u_k are friends. The corresponding adjacency matrix $\mathbf{A}_{uu} \in \{0,1\}^{I \times I}$ is defined as

$$\mathbf{A}_{uu}(i,k) = \begin{cases} 1, & \text{if } u_i \text{ and } u_k \text{ are friends,} \\ 0, & \text{otherwise.} \end{cases}$$

Similarly, items can be associated through an item relational graph $\mathcal{G}_{vv} = (\mathcal{V}, \mathcal{E}_{vv})$, which captures potential correlations among items. In our setting, an undirected edge $(v_j, v_{j'}) \in \mathcal{E}_{vv}$ is established if the two items (e.g., merchants) are located in the same city. Formally, the adjacency matrix $\mathbf{A}_{vv} \in \{0,1\}^{J \times J}$ is defined as

$$\mathbf{A}_{vv}(j,j') = \begin{cases} 1, & \text{if city}(v_j) = \text{city}(v_{j'}), \\ 0, & \text{otherwise.} \end{cases}$$

This spatially defined item–item relationship enables the model to leverage geographical proximity information, which is often indicative of shared user preferences or similar business contexts.

3.3. Problem Definition

Given the user–item interaction graph $\mathcal{G}_{ui}$, the user social graph $\mathcal{G}_{uu}$, and the item relational graph $\mathcal{G}_{vv}$, the goal of social recommendation is to learn a prediction function

$$\hat{y}_{ij} = f(u_i, v_j \mid \mathcal{G}_{ui}, \mathcal{G}_{uu}, \mathcal{G}_{vv}),$$

which estimates the preference score $\hat{y}_{ij}$ of user u_i for item v_j. The model is expected to capture both social influence among users and relational dependencies among items to improve recommendation accuracy.

4. Method

In the graph neural network framework, the message construction phase aims to formulate the information that each node sends to its neighbors before aggregation. In our model, user and item nodes exchange messages through three types of relations: user–user, item–item, and user–item. Each relation contributes distinct semantic information to the representation learning process.

In our work, we first design a **TiDE-GCN** model based on a static graph mechanism. Then, we extend this framework by introducing the concept of dynamic graphs to develop **TSD-GCN**. Finally, inspired by our classroom discussions on developing recommendation algorithms using recurrent neural networks, we further constructed an additional model to explore this perspective in depth, and we call the model "Sign-enhanced GRU".

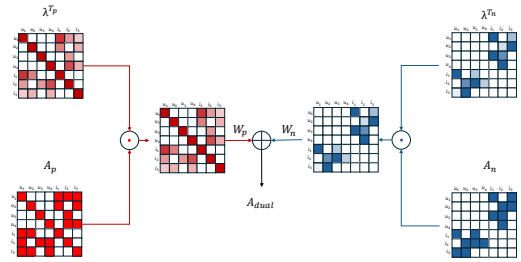

Figure 1. Time-based Exponential Decay Module: The figure illustrates the principle of the combined effect of time-based exponential decay and the adjacency matrix.

4.1. TiDE-GCN

4.1.1. User–Item Interaction Graph

The user–item interactions are represented by a bipartite graph $\mathcal{G}_{ui} = (\mathcal{U}, \mathcal{V}, \mathcal{E}_{ui})$, where an edge $(u_i, v_j) \in \mathcal{E}_{ui}$ indicates that user u_i has interacted with item v_j. Traditional studies commonly construct the user–item adjacency matrix $\mathbf{A}_{ui} \in \{0,1\}^{I \times J}$ by assigning $\mathbf{A}_{ui}(i,j) = 1$ if user u_i has provided a positive feedback (e.g., high rating) to item v_j, and $\mathbf{A}_{ui}(i,j) = 0$ otherwise.

However, this binary construction implicitly treats all unobserved interactions as negative samples, which may introduce bias and lead to the loss of potentially useful information about unexposed items. To alleviate this limitation, we redefine the adjacency matrix to explicitly capture both positive and negative preferences. Specifically, we assign

$$\mathbf{A}_{ui}(i,j) = \begin{cases} 1, & \text{if } r_{ij} \in \{4,5\}, \\ -1, & \text{if } r_{ij} \in \{1,2\}, \\ 0, & \text{otherwise,} \end{cases}$$

where r_{ij} denotes the explicit rating given by user u_i to item v_j. In this way, the positive edges $(+1)$ reflect strong user preference, while the negative edges (-1) encode explicit user dislike. Unrated items (r_{ij} missing or neutral rating) remain unconnected.

This modification preserves the semantic distinction between "unknown" and "disliked" interactions, allowing the model to better capture the nuanced relationship between

users and items and to mitigate the bias caused by false negative sampling.

4.1.2. Temporal User–Item Interactions

In addition to interaction polarity, we also record the specific timestamps of user–item interactions to capture the temporal dynamics of user preferences. We define a temporal interaction matrix $\mathbf{T}_{ui} \in \mathbb{R}^{I \times J}$, where each entry $\mathbf{T}_{ui}(i,j)$ denotes the timestamp when user u_i interacted with item v_j. If no interaction is observed, the entry is left as zero.

We argue that incorporating temporal information into the modeling process enables the recommendation system to better reflect the evolution of user interests over time. To this end, we adopt a relative positional encoding mechanism to extract temporal relations between interactions. Specifically, given two timestamps t_i and t_j, the relative position encoding function $\phi(t_i, t_j)$ captures their temporal distance or order. The resulting relative embedding is then added to the user or item representation to enhance temporal sensitivity:

$$\tilde{\mathbf{h}}_u = \mathbf{h}_u + \phi(t_u, t_v), \quad \tilde{\mathbf{h}}_v = \mathbf{h}_v + \phi(t_v, t_u),$$

where $\mathbf{h}_u$ and $\mathbf{h}_v$ are the initial embeddings of user u and item v, respectively, and $\phi(\cdot)$ is a learnable or deterministic function that encodes the temporal difference between user–item interactions.

By integrating relative temporal encoding into the representation learning process, the model can adapt to the evolving nature of user preferences and better distinguish between short-term and long-term interests.

4.2. TDS-GCN

4.2.1. Time-aware Dual-sign Adjacency Construction

In conventional graph-based collaborative filtering models, the adjacency matrix is typically constructed based only on positive user–item interactions (e.g., high ratings or clicks). This approach neglects the valuable information contained in negative interactions (e.g., low ratings or skips), leading to biased graph representations. To address this limitation, we construct two separate adjacency matrices to explicitly capture both positive and negative interactions:

$$\mathbf{A}_p, \mathbf{A}_n \in \{0,1\}^{(I+J)\times(I+J)},$$

where $\mathbf{A}_p(i,j) = 1$ if user u_i has a positive interaction with item v_j, and $\mathbf{A}_n(i,j) = 1$ if user u_i has a negative interaction with item v_j.

Incorporating Temporal Dynamics. Traditional GCN-based methods also overlook temporal factors, treating all interactions as equally important regardless of their recency. However, interactions that occur more recently are often more indicative of a user's current preferences. To model this temporal dependency, we associate each adjacency matrix with a corresponding timestamp matrix:

$$\mathbf{T}_p, \mathbf{T}_n \in \mathbb{R}^{(I+J)\times(I+J)},$$

where $\mathbf{T}_p(i,j)$ and $\mathbf{T}_n(i,j)$ denote the relative timestamps of the corresponding positive and negative interactions, respectively.

For each user u_i, we compute relative timestamps such that the latest interaction is assigned 0, and he previous interactions, in turn, increase in order of their occurrence. For example, the most recent interaction record of $user_i$ is recorded as 0, the previous interaction record as 1, and the one before that as 2. However, such an approach may lead to numerical explosion, and it may assign significantly different sequential indices to multiple interactions occurring within a short period (e.g., within one day). This could mislead the model into assuming that a user's preferences change drastically within a very short time frame. Therefore, we argue that interactions occurring within relatively short time intervals should be assigned the same temporal identifier. The specific procedure is as follows:

$$\lambda(i,j) = \exp\left(-\frac{t_i^{\max} - \mathbf{T}(i,j)}{\Delta t} \times \alpha\right), \tag{1}$$

where Δt is a predefined time interval constant that converts the temporal unit (e.g., $\Delta t = \text{time_step} \times 24 \times 3600$ seconds), and α is a scaling factor that controls the rate of temporal decay.

The same process is applied to items. To emphasize the temporal importance of recent interactions, we introduce temporal weighting functions $\lambda^{(\mathbf{T}_p)}$ and $\lambda^{(\mathbf{T}_n)}$, which assign higher weights to more recent interactions. The element-wise temporal adjustment is then formulated as:

$$\tilde{\mathbf{A}}_p = \lambda^{(\mathbf{T}_p)} \odot \mathbf{A}_p, \quad \tilde{\mathbf{A}}_n = \lambda^{(\mathbf{T}_n)} \odot \mathbf{A}_n,$$

where $\odot$ denotes the Hadamard (element-wise) product.

Adaptive Fusion of Positive and Negative Interactions. To adaptively balance the influence of positive and negative feedback, we introduce two learnable affinity matrices $\mathbf{W}_p$ and $\mathbf{W}_n$, initialized as all-one matrices and updated during training. These matrices serve as adaptive gates that control the contribution of each interaction type for every user and item. The final time-aware dual-sign adjacency matrix is computed as:

$$\mathbf{A}_{\text{dual}} = \mathbf{W}_p \cdot \tilde{\mathbf{A}}_p - \mathbf{W}_n \cdot \tilde{\mathbf{A}}_n.$$

Compared with conventional methods that only encode positive interactions with uniform weights, our approach (1)

incorporates both positive and negative feedback, (2) introduces temporal decay to prioritize recent interactions, and (3) adaptively learns user- and item-specific importance weights through $\mathbf{W}_p$ and $\mathbf{W}_n$. The resulting $\mathbf{A}_{\text{dual}}$ is then used as the adjacency matrix input for subsequent graph convolutional propagation.

To adaptively balance the influence of positive and negative feedback, we introduce two learnable affinity matrices $\mathbf{W}_p$ and $\mathbf{W}_n$, initialized as all-one matrices and updated during training. These matrices serve as adaptive gates that control the contribution of each interaction type for every user and item. The final time-aware dual-sign adjacency matrix is computed as:

$$\mathbf{A}_{\text{dual}} = \mathbf{W}_p \cdot \tilde{\mathbf{A}}_p - \mathbf{W}_n \cdot \tilde{\mathbf{A}}_n.$$

Compared with conventional methods that only encode positive interactions with uniform weights, our approach (1) incorporates both positive and negative feedback, (2) introduces temporal decay to prioritize recent interactions, and (3) adaptively learns user- and item-specific importance weights through $\mathbf{W}_p$ and $\mathbf{W}_n$. The resulting $\mathbf{A}_{\text{dual}}$ is then used as the adjacency matrix input for subsequent graph convolutional propagation.

It is worth noting that we do *not* constrain $\mathbf{W}_n$ to be strictly positive. For some users, a low rating does not necessarily imply strong dislike; rather, it may indicate a moderate level of preference. In such cases, the corresponding entries in $\mathbf{A}_{\text{dual}}$ should ideally take small positive values instead of negative ones. To account for this user-specific diversity, we avoid using a unified scalar coefficient α to balance positive and negative feedback. Instead, each user is assigned a learnable parameter that allows the model to flexibly capture individual attitudes—some users may strongly penalize items associated with negative interactions, while others may simply assign them lower weights. A similar rationale applies to $\mathbf{W}_p$, which enables the model to learn user-dependent sensitivity to positive interactions.

4.3. Message Construction Phase

For the user–item bipartite graph $\mathcal{G}_{ui}$, the message construction differs from conventional methods by considering both signed interaction polarity and temporal dynamics. For an observed interaction (u_i, v_j), the message from item v_j to user u_i is defined as

$$\mathbf{m}^{(l)}_{v_j \to u_i} = \alpha_{ij}\, \mathbf{W}^{(l)}_{ui} \big(\mathbf{h}^{(l)}_{v_j} + \phi(t_{ij})\big),$$

where $\mathbf{W}^{(l)}_{ui}$ is the transformation matrix for user–item relations, and $\phi(t_{ij})$ denotes the relative temporal encoding that captures the recency of interaction. The coefficient α_{ij} represents the signed interaction weight derived from the adjacency matrix $\mathbf{A}_{ui}$:

$$\alpha_{ij} = \begin{cases} +1, & \text{if } r_{ij} \in \{4, 5\}, \\ -1, & \text{if } r_{ij} \in \{1, 2\}, \\ 0, & \text{otherwise.} \end{cases}$$

In this way, the message construction process incorporates both positive and negative signals while dynamically adjusting the message content based on the temporal characteristics of interactions. Through the above construction, our framework generates a unified set of relation-aware messages:

$$\mathcal{M}^{(l)} = \big\{\mathbf{m}^{(l)}_{u_k \to u_i},\ \mathbf{m}^{(l)}_{v_{j'} \to v_j},\ \mathbf{m}^{(l)}_{v_j \to u_i}\big\},$$

which serve as the input for the subsequent message aggregation phase. This design enables the model to integrate multi-relational, signed, and temporal information within a coherent GNN architecture.

4.4. Message Aggregation Phase

By stacking L embedding propagation layers, both users and items are able to receive messages propagated from their L-hop neighbors, thereby capturing higher-order collaborative relations in the graph. As illustrated in Figure **??**, during the l-th propagation step, the representation of a user u_i and an item v_j is recursively updated based on the aggregated messages from their respective neighborhoods.

Specifically, the embedding of user u_i at the l-th layer is formulated as:

$$\mathbf{h}^{(l)}_{u_i} = \text{LeakyReLU}\left(\mathbf{m}^{(l)}_{u_i \leftarrow u_i} + \sum_{v_j \in \mathcal{N}_{u_i}} \mathbf{m}^{(l)}_{u_i \leftarrow v_j}\right), \quad (1)$$

and similarly, the embedding of item v_j is defined as:

$$\mathbf{h}^{(l)}_{v_j} = \text{LeakyReLU}\left(\mathbf{m}^{(l)}_{v_j \leftarrow v_j} + \sum_{u_i \in \mathcal{N}_{v_j}} \mathbf{m}^{(l)}_{v_j \leftarrow u_i}\right), \quad (2)$$

where $\mathcal{N}_{u_i}$ and $\mathcal{N}_{v_j}$ denote the neighboring sets of user u_i and item v_j, respectively.

The propagated messages are computed as:

$$\mathbf{m}^{(l)}_{u_i \leftarrow v_j} = p_{ij}\left(\mathbf{W}^{(l)}_1 \mathbf{h}^{(l-1)}_{v_j} + \mathbf{W}^{(l)}_2 \left(\mathbf{h}^{(l-1)}_{v_j} \odot \mathbf{h}^{(l-1)}_{u_i}\right)\right), \quad (3)$$

$$\mathbf{m}^{(l)}_{u_i \leftarrow u_i} = \mathbf{W}^{(l)}_1 \mathbf{h}^{(l-1)}_{u_i}, \quad (4)$$

where $\odot$ denotes the element-wise product, p_{ij} is the interaction indicator between user u_i and item v_j, and $\mathbf{W}^{(l)}_1, \mathbf{W}^{(l)}_2 \in \mathbb{R}^{d_l \times d_{l-1}}$ are learnable transformation matrices at layer l.

Finally, the embeddings from all propagation layers are normalized through residual connection and layer normalization as:

$$\mathbf{h}_{u_i}^{(L)} = \text{LayerNorm}\big(\mathbf{h}_{u_i}^{(L)} + \mathbf{h}_{u_i}^{(L-1)}\big), \tag{5}$$

$$\mathbf{h}_{v_j}^{(L)} = \text{LayerNorm}\big(\mathbf{h}_{v_j}^{(L)} + \mathbf{h}_{v_j}^{(L-1)}\big). \tag{6}$$

4.5. Feature De-correlation Regularization

To jointly optimize user–item interaction modeling, representation robustness, and structural consistency, our total objective function consists of four components:

$$\mathcal{L} = \mathcal{L}_{\text{BPR}} + \lambda_{\text{reg}}\mathcal{L}_{\text{reg}} + \lambda_{\text{corr}}\mathcal{L}_{\text{corr}} + \lambda_{\text{DGI}}(\mathcal{L}_{\text{uu}} + \mathcal{L}_{\text{ii}}),$$

where $\lambda_{\text{reg}}, \lambda_{\text{corr}}$, and λ_{DGI} are hyperparameters controlling the relative weights of each term.

(1) BPR Loss. Following **?**, we adopt the pairwise ranking objective to ensure that each user u prefers a positively interacted item i^+ over a negatively interacted one i^-. Given the corresponding embeddings $\mathbf{e}_u, \mathbf{e}_{i^+}, \mathbf{e}_{i^-} \in \mathbb{R}^d$, the BPR loss is defined as:

$$\mathcal{L}_{\text{BPR}} = -\frac{1}{|\mathcal{B}|} \sum_{(u,i^+,i^-)\in\mathcal{B}} \log \sigma\left(\hat{y}_{u,i^+} - \hat{y}_{u,i^-}\right),$$

where $\hat{y}_{u,i} = \mathbf{e}_u^\top \mathbf{e}_i$ denotes the predicted preference score and $\sigma(\cdot)$ is the sigmoid function.

(2) L_2 Regularization Loss. To prevent overfitting and stabilize embedding magnitudes, we employ an L_2 regularization term over the user and item embeddings:

$$\mathcal{L}_{\text{reg}} = \frac{1}{|\mathcal{B}|} \sum_{(u,i^+,i^-)\in\mathcal{B}} \left(\|\mathbf{e}_u\|_2^2 + \|\mathbf{e}_{i^+}\|_2^2 + \|\mathbf{e}_{i^-}\|_2^2\right).$$

(3) Correlation-based Smoothing Loss. To alleviate the over-smoothing and over-correlation problems in multi-layer graph propagation, we compute a correlation loss that measures the redundancy of node representations across layers. Let $\mathbf{E}_u^{(l)}$ and $\mathbf{E}_i^{(l)}$ denote the user and item embeddings at layer l, and $c(\mathbf{E}^{(l)})$ represent the average feature correlation within a layer. The correlation loss is defined as:

$$\mathcal{L}_{\text{corr}} = \frac{1}{2}\left(\mathcal{L}_{\text{corr}}^{(u)} + \mathcal{L}_{\text{corr}}^{(i)}\right), \quad \text{where} \quad \mathcal{L}_{\text{corr}}^{(u)} = \sum_{l=1}^{L-1} \omega_u^{(l)}\, c(\mathbf{E}_u^{(l)}),$$

and $\omega_u^{(l)}$ is the layer-wise weighting coefficient. Depending on the weighting strategy, $\omega_u^{(l)}$ (and similarly $\omega_i^{(l)}$) can be computed as:

$$\omega^{(l)} = \begin{cases} \dfrac{1/c(\mathbf{E}^{(l)})}{\sum_k 1/c(\mathbf{E}^{(k)})}, & \text{(harmonic mean, HM)} \\ \dfrac{1}{L-1}, & \text{(simple mean, SM)} \\ \dfrac{[c(\mathbf{E}^{(l)})]^2}{\sum_k [c(\mathbf{E}^{(k)})]^2}, & \text{(mean-square, MS).} \end{cases}$$

This term encourages diversity among layer representations and suppresses over-correlation across nodes.

(4) Self-supervised DGI Loss. To further enhance the structural consistency within user–user and item–item subgraphs, we integrate Deep Graph Infomax (DGI)-based self-supervision. Let $\mathcal{G}_{uu}$ and $\mathcal{G}_{ii}$ denote the corresponding subgraphs, and $\mathcal{L}_{\text{uu}}$ and $\mathcal{L}_{\text{ii}}$ their respective contrastive losses. For example, the user–user DGI loss is given by:

$$\mathcal{L}_{\text{uu}} = \frac{(\mathcal{L}_{\text{uu}}^{+} \odot \mathbf{m}_u) + (\mathcal{L}_{\text{uu}}^{-} \odot \mathbf{m}_u)}{\sum \mathbf{m}_u},$$

where $\mathcal{L}_{\text{uu}}^{+}$ and $\mathcal{L}_{\text{uu}}^{-}$ are the positive and negative DGI losses, and $\mathbf{m}_u$ is a binary mask indicating the sampled users within the subgraph. The item–item DGI loss $\mathcal{L}_{\text{ii}}$ is defined analogously.

Through joint optimization of these components, our model effectively captures user preference ranking, mitigates over-smoothing, and enhances structure-aware self-supervision.

4.6. Time Complexity Analysis

In this section, we analyze the time complexity of the proposed model. Since our message-passing process only considers user–item interactions, the forward propagation complexity is mainly determined by the number of user–item edges. The user–user and item–item relations are utilized solely in the loss function as regularization terms, rather than being explicitly involved in the embedding propagation process.

Let I and J denote the numbers of users and items, and let $|\mathcal{E}_{UI}|$ represent the number of user–item interactions. For the l-th layer, each user (and item) aggregates information from its directly connected counterparts through two learnable transformation matrices $\mathbf{W}_1^{(l)}$ and $\mathbf{W}_2^{(l)} \in \mathbb{R}^{d_l \times d_{l-1}}$. Thus, the computational complexity for message construction and aggregation in one propagation layer is:

$$\mathcal{O}\big(|\mathcal{E}_{UI}| \cdot d_{l-1} d_l\big). \tag{7}$$

Given an L-layer propagation structure, the total time complexity of the forward pass can be expressed as:

$$\mathcal{O}\big(L \cdot |\mathcal{E}_{UI}| \cdot d_{l-1} d_l\big). \tag{8}$$

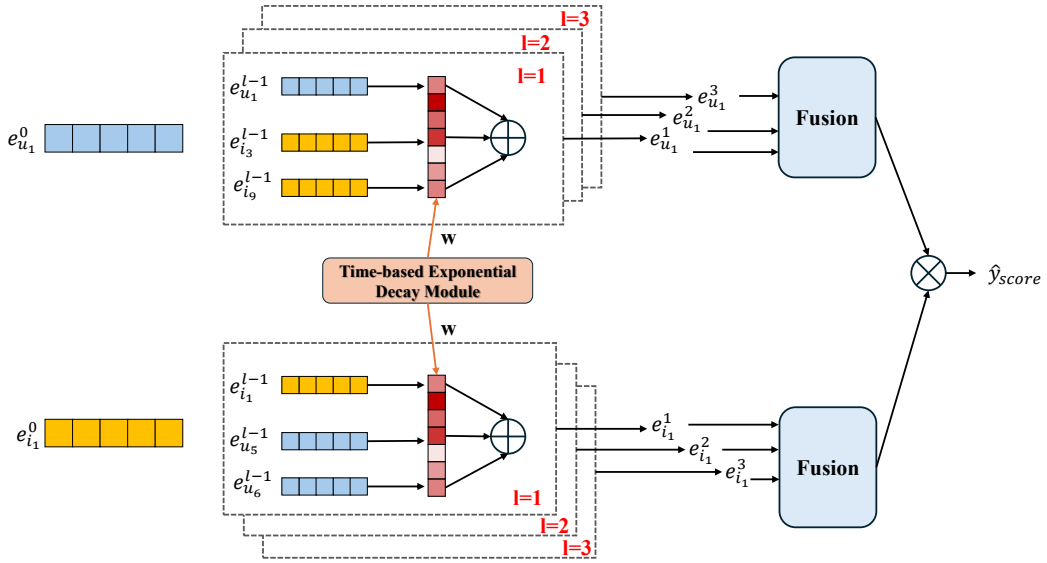

Figure 2. Model Architecture. The figure illustrates the contribution of each component in TDS-GCN.

Regarding the loss computation, the user–user and item–item graphs serve as auxiliary regularization to preserve relational consistency. Specifically, the model introduces pairwise smoothness constraints between connected users and between related items, which can be formulated as:

$$\mathcal{L}_{\text{reg}} = \alpha \sum_{(u_i,u_j)\in\mathcal{E}_{UU}} \|\mathbf{h}_{u_i}^{(L)} - \mathbf{h}_{u_j}^{(L)}\|_2^2 + \beta \sum_{(v_i,v_j)\in\mathcal{E}_{VV}} \|\mathbf{h}_{v_i}^{(L)} - \mathbf{h}_{v_j}^{(L)}\|_2^2, \tag{9}$$

where α and β are balance coefficients. This loss term enforces embedding similarity among socially connected users and semantically related items, enhancing structural smoothness.

The additional computational cost introduced by $\mathcal{L}_{\text{reg}}$ is proportional to the number of edges in the social and item relational graphs, i.e.,

$$\mathcal{O}\big(|\mathcal{E}_{UU}| \cdot d_L + |\mathcal{E}_{VV}| \cdot d_L\big), \tag{10}$$

which is typically negligible compared to the forward propagation since both $\mathcal{E}_{UU}$ and $\mathcal{E}_{VV}$ are sparse in practice.

In summary, the overall time complexity of our model is:

$$\mathcal{O}\big(L \cdot |\mathcal{E}_{UI}| \cdot d_{l-1} d_l + (|\mathcal{E}_{UU}| + |\mathcal{E}_{VV}|) \cdot d_L\big), \tag{11}$$

which grows linearly with the number of observed interactions and remains computationally efficient for large-scale recommendation scenarios.

5. Experiment

Benchmark. Yelp Dataset.

Baselines. **GNN-based:** (1) LightGCN(He et al., 2020) (2) afd-lightGCN(Wu et al., 2024) (3) KGCN(Huang et al., 2021) **RNN-based:** (4) GRU4Rec (Hidasi et al., 2016) (5) SASRec (Kang & McAuley, 2018). (6) STAMP (Liu et al., 2018).

Evaluation Metrics. To evaluate the performance of our proposed model, we adopt two widely used metrics in recommendation systems: **Hit Ratio (HR)** and **Normalized Discounted Cumulative Gain (NDCG)**. Both metrics measure the model's ability to rank relevant items higher in the recommendation list, reflecting the effectiveness of top-K recommendation.

Hit Ratio measures whether the ground-truth item appears in the top-K ranked list. Formally, for a given user u, let $\mathcal{R}_u^K$ denote the ranked list of top-K recommended items and i^* denote the ground-truth item that the user actually interacted with. The Hit Ratio for user u is defined as:

$$\text{HR@}K(u) = \begin{cases} 1, & \text{if } i^* \in \mathcal{R}_u^K, \\ 0, & \text{otherwise.} \end{cases} \tag{12}$$

The final HR@K is then averaged over all users:

$$\text{HR@}K = \frac{1}{|\mathcal{U}|} \sum_{u\in\mathcal{U}} \text{HR@}K(u), \tag{13}$$

where $\mathcal{U}$ denotes the set of all test users. A higher HR value indicates that the model can successfully recommend more relevant items within the top-K positions.

While HR only considers whether the relevant item appears in the top-K list, it does not account for its ranking position. To further evaluate the ranking quality, we adopt NDCG, which assigns higher importance to hits at higher ranks. It is defined as:

$$\text{NDCG@}K(u) = \frac{1}{\text{IDCG@}K(u)} \sum_{j=1}^{K} \frac{2^{rel_{u,j}} - 1}{\log_2(j+1)}, \quad (14)$$

where $rel_{u,j}$ indicates the relevance of the item ranked at position j for user u, and IDCG@$K(u)$ is the ideal DCG (the maximum possible DCG value when all relevant items are ranked at the top positions). The final NDCG@K is averaged over all users:

$$\text{NDCG@}K = \frac{1}{|\mathcal{U}|} \sum_{u \in \mathcal{U}} \text{NDCG@}K(u). \quad (15)$$

A higher NDCG value means that the model assigns higher ranks to relevant items, demonstrating better recommendation quality.

Implementation Details. All experiments are implemented in PyTorch and conducted on two NVIDIA RTX 3080Ti 24GB GPUs.

Results. As shown in Tab. 1, our proposed models, **TDS-GCN** and **TiDE-GCN**, demonstrate superior performance compared to all baseline methods on the Yelp dataset. Specifically, **TDS-GCN** achieves a HR of 0.830 and an NDCG of 0.550, significantly outperforming the baselines. These results verify the effectiveness of incorporating both temporal dynamics and dual-sign modeling in enhancing recommendation accuracy.

Ablation Study. To further investigate the contribution of each component in our framework, we conduct a comprehensive ablation study on the Yelp dataset. Specifically, we progressively remove or replace the key modules, including (1) the temporal decay mechanism, (2) the dual-sign modeling, and (3) the adaptive affinity matrices $\mathbf{W}_p$ and $\mathbf{W}_n$. To investigate the contribution of each component in TDS-GCN, we conducted an ablation study on the Yelp dataset. The results are summarized in Table 2.

We observe that removing the temporal decay module (*w/o Temporal Decay*) causes a significant drop in both HR and NDCG, indicating that temporal dynamics play a vital role in capturing user preference evolution over time. Similarly, the performance degradation of the model variant *w/o Dual-Sign Modeling* demonstrates the importance of explicitly modeling both positive and negative edges in signed user-item interactions. When the adaptive parameter matrices $\mathbf{W}_p$ and $\mathbf{W}_n$ are removed, the performance slightly decreases, confirming that learning direction-specific transformations helps the model better distinguish user attitudes.

Furthermore, replacing the adaptive matrices with a global scalar α still achieves competitive performance, but remains inferior to the full model, highlighting that fine-grained feature weighting provides additional expressive power. Finally, when both time and sign information are removed (*Static Graph*), the performance drops drastically, suggesting that TDS-GCN's temporal and signed representations are key to its superior recommendation capability.

Overall, these results validate the effectiveness of our design choices and confirm that each component contributes to the overall model performance.

6. Conclusion

In this paper, we proposed TDS-GCN, a novel Time-aware Dual-sign Graph Convolutional Network that simultaneously incorporates interaction polarity and temporal dynamics into collaborative filtering. Unlike conventional GNN-based recommendation models that only consider positive feedback and static user–item relationships, TDS-GCN introduces dual-sign graph structures to represent both positive and negative interactions, thereby capturing a more comprehensive view of user preferences. Moreover, we applied temporal decay mechanisms to emphasize the recency of interactions and designed learnable affinity matrices to adaptively fuse signed information, enabling the model to learn personalized sensitivity toward different feedback types. Extensive experiments on benchmark datasets demonstrate that TDS-GCN consistently outperforms state-of-the-art baselines, confirming the effectiveness of modeling both signed and temporal signals in graph-based recommender systems.

For future work, we aim to extend our framework by incorporating graph attention mechanisms (GATs) to dynamically learn the importance of neighbors rather than relying on uniform aggregation. Such an attention-based extension could further enhance the model's ability to distinguish informative interactions, especially in complex dynamic environments. Moreover, we plan to explore adaptive temporal attention that jointly learns user-specific time sensitivity, allowing the model to better capture long-term preference shifts. These directions may lead to a more flexible and general framework for temporal signed graph representation learning.

Table 1. Performance comparison on the Yelp dataset. The best results are highlighted in bold, and the second-best results are underlined.

Model(Ours)	HR	NDCG	Model(GNN-based)	HR	NDCG	Model(RNN-based)	HR	NDCG
TDS-GCN	**0.830**	**0.550**	KGCN	0.456	0.305	GRU4Rec	0.162	0.401
TiDE-GCN	**0.722**	**0.500**	LightGCN	0.477	0.299	SASRec	0.221	0.544
Sign-enhanced GRU	0.144	0.349	adf-LightGCN	0.246	0.151	STMP	0.082	0.273

Table 2. Ablation study of TDS-GCN on the Yelp dataset. Each variant removes or modifies a specific component to evaluate its contribution. The best results are highlighted in red, and the second-best in blue.

Model Variant	HR	NDCG
TDS-GCN (Full Model)	**0.830**	**0.550**
w/o Temporal Decay	0.514	0.772
w/o Dual-Sign Modeling	0.771	0.526
w/o Adaptive Weights ($\mathbf{W}_p$, $\mathbf{W}_n$)	0.803	0.531
Global Scalar α instead of $\mathbf{W}_p$, $\mathbf{W}_n$	**0.812**	**0.526**
Static Graph (No Time & Sign)	0.767	0.521

References

Bonet, E. R., Nguyen, D. M., and Deligiannis, N. Temporal collaborative filtering with graph convolutional neural networks. In *Proceedings of the International Conference on Machine Learning (ICML 2020)*, Virtual Conference, 2020. PMLR. Available at https://arxiv.org/abs/2010.06425.

Chen, D., O'Bray, L., and Borgwardt, K. Structure-aware transformer for graph representation learning. *arXiv preprint arXiv:2202.03036*, 2022. URL https://arxiv.org/abs/2202.03036.

Chen, S., Chen, J., Zhou, S., Wang, B., Han, S., Su, C., Yuan, Y., and Wang, C. Sigformer: Sign-aware graph transformer for recommendation. In *Proceedings of the 47th International ACM SIGIR Conference on Research and Development in Information Retrieval*, pp. 1274–1284, Washington, DC, USA, 2024. ACM. doi: 10.1145/3626772.3657747.

Derr, T., Ma, Y., and Tang, J. Signed graph convolutional network. *arXiv preprint arXiv:1808.06354*, 2018. URL https://arxiv.org/abs/1808.06354.

Dwivedi, V. P. and Bresson, X. A generalization of transformer networks to graphs. *arXiv preprint arXiv:2012.09699*, 2021. URL https://arxiv.org/abs/2012.09699.

Fan, W., Ma, Y., Li, Q., He, Y., Zhao, E., Tang, J., and Yin, D. Graph neural networks for social recommendation. *arXiv preprint arXiv:1902.07243*, 2019. URL https://arxiv.org/abs/1902.07243.

Hamilton, W. L., Ying, R., and Leskovec, J. Inductive representation learning on large graphs. In *Proceedings of the 31st International Conference on Neural Information Processing Systems (NeurIPS)*, 2017. URL https://arxiv.org/abs/1706.02216.

He, X., Deng, K., Wang, X., Li, Y., Zhang, Y., and Wang, M. Lightgcn: Simplifying and powering graph convolution network for recommendation. In *Proceedings of the 43rd International ACM SIGIR Conference on Research and Development in Information Retrieval (SIGIR 2020)*, pp. 639–648, Virtual Event, China, 2020. ACM.

Hidasi, B., Karatzoglou, A., Baltrunas, L., and Tikk, D. Session-based recommendations with recurrent neural networks. In *Proceedings of the International Conference on Learning Representations (ICLR)*, San Juan, Puerto Rico, 2016. OpenReview.net.

Huang, C., Xu, H., Xu, Y., Dai, P., Xia, L., Lu, M., Bo, L., Xing, H., Lai, X., and Ye, Y. Knowledge-aware coupled graph neural network for social recommendation. In *Proceedings of the 30th International Joint Conference on Artificial Intelligence (IJCAI 2021)*, pp. 2261–2268, Montreal, Canada, 2021. IJCAI.

Huang, J., Shen, H., Hou, L., and Cheng, X. Signed graph attention networks. *arXiv preprint arXiv:1906.10958*, 2019. URL https://arxiv.org/abs/1906.10958.

Kang, W.-C. and McAuley, J. Self-attentive sequential recommendation. In *Proceedings of the IEEE International Conference on Data Mining (ICDM)*, 2018. URL https://arxiv.org/abs/1808.09781. arXiv:1808.09781.

Kipf, T. N. and Welling, M. Semi-supervised classification with graph convolutional networks. In *Proceedings*

of the International Conference on Learning Representations (ICLR), 2017. URL https://arxiv.org/abs/1609.02907.

Liu, Q., Zeng, Y., Mokhosi, R., and Zhang, H. Stamp: Short-term attention/memory priority model for session-based recommendation. In *Proceedings of the 24th ACM SIGKDD International Conference on Knowledge Discovery and Data Mining (KDD '18)*, pp. 1831–1839, London, United Kingdom, 2018. ACM. doi: 10.1145/3219819.3219950. URL https://doi.org/10.1145/3219819.3219950.

Ma, C., Kang, P., and Liu, X. Hierarchical gating networks for sequential recommendation. In *Proceedings of the 25th ACM SIGKDD International Conference on Knowledge Discovery and Data Mining (KDD)*, Anchorage, AK, USA, 2019. ACM.

Mara, A., Mashayekhi, Y., Lijffijt, J., and de Bie, T. Csne: Conditional signed network embedding. In *Proceedings of the 29th ACM International Conference on Information and Knowledge Management (CIKM '20)*, pp. 1105–1114. ACM, 2020. doi: 10.1145/3340531.3411959. URL https://doi.org/10.1145/3340531.3411959.

Ricci, F., Rokach, L., and Shapira, B. *Introduction to Recommender Systems Handbook*. Springer, Boston, MA, 2011.

Vaswani, A., Shazeer, N., Parmar, N., Uszkoreit, J., Jones, L., Gomez, A. N., Łukasz Kaiser, and Polosukhin, I. Attention is all you need. In *Proceedings of the 31st Conference on Neural Information Processing Systems (NeurIPS 2017)*, pp. 6000–6010, Long Beach, CA, 2017. Curran Associates.

Wang, S., Tang, J., Aggarwal, C. C., Chang, Y., and Liu, H. Signed network embedding in social media. In *Proceedings of the 2017 SIAM International Conference on Data Mining (SDM 2017)*, pp. 327–335, Houston, TX, 2017. SIAM.

Wang, X., He, X., Wang, M., Feng, F., and Chua, T.-S. Neural graph collaborative filtering. In *Proceedings of the 42nd International ACM SIGIR Conference on Research and Development in Information Retrieval*, pp. 165–174, Paris, France, 2019. ACM. doi: 10.1145/3331184.3331267.

Wang, X., Jin, H., Zhang, A., He, X., Xu, T., and Chua, T.-S. Disentangled graph collaborative filtering. In *Proceedings of the 43rd International ACM SIGIR Conference on Research and Development in Information Retrieval (SIGIR)*, pp. 1001–1010. ACM, 2020. URL https://doi.org/10.1145/3397271.3401137.

Wu, S., Tang, Y., Zhu, Y., Wang, L., Xie, X., and Tan, T. Session-based recommendation with graph neural networks. In *Proceedings of the 33rd AAAI Conference on Artificial Intelligence (AAAI 2019)*, pp. 346–353, Honolulu, Hawaii, USA, 2019. AAAI Press. doi: 10.1609/aaai.v33i01.3301346. URL https://doi.org/10.1609/aaai.v33i01.3301346.

Wu, W., Wang, C., Shen, D., Qin, C., Chen, L., and Xiong, H. Afdgcf: Adaptive feature de-correlation graph collaborative filtering for recommendations. In *Proceedings of the 30th ACM SIGKDD Conference on Knowledge Discovery and Data Mining (KDD 2024)*, pp. to appear, Barcelona, Spain, 2024. ACM.

Ying, C., Cai, T., Luo, S., Zheng, S., Ke, G., He, D., Shen, Y., and Liu, T.-Y. Do transformers really perform bad for graph representation? *arXiv preprint arXiv:2106.05234*, 2021. URL https://arxiv.org/abs/2106.05234.

A. Sequential Recommendation Model

A.1. Motivation

Modern sequential recommenders (e.g., GRU4Rec, SASRec) primarily model item sequences via learned item embeddings and thus often ignore heterogeneity across users. As a consequence, two users with identical interaction sequences are likely to receive identical recommendations, even when their expressed preferences (ratings) differ.

We identify two empirical phenomena that expose this limitation.

(1) Rating-aware behavior. Identical interaction sequences but distinct rating patterns should produce different next-item preferences. For example, two users may visit the same restaurants but assign markedly different ratings; their next-item preferences therefore diverge.

(2) Preference-stability heterogeneity. Some users exhibit stable, persistent tastes (low volatility) and benefit from exploitation of high-rated neighborhoods, while others exhibit volatile or phase-dependent tastes and benefit from broader exploration.

Common remedies include (i) adding user embeddings, (ii) fusing side information such as location or time, or (iii) separately modeling short- and long-term signals (e.g., STAMP). However, these approaches either require additional user metadata or do not explicitly control the exploration–exploitation trade-off conditioned on rating signals and user volatility.

A.2. Method Overview

We propose a compact alternative that:

1. injects rating information by computing a **rating-weighted historical centroid**, and
2. learns a **data-driven scalar gate** $v \in (0, 1)$ that adaptively balances exploitation and exploration for each sample.

Our design leverages only ratings available in standard review datasets (avoiding additional side-information that may leak future signals), and yields a principled mechanism to handle both rating-aware and preference-stability heterogeneity.

A.3. Model Details

Let a user interaction prefix be $\{(i_1, r_1, t_1), \ldots, (i_T, r_T, t_T)\}$, where i_t is the item, r_t the rating (scalar), and t_t the timestamp. Our model has three components: (A) a GRU backbone that encodes sequential dynamics, (B) a rating-weighted historical centroid summarizing long-term preference, and (C) a gating head that mixes exploitation and exploration scores.

(A) GRU encoder. Each item index is embedded via $e_i \in \mathbb{R}^d$. Passing the sequence $\{e_{i_t}\}_{t=1}^T$ into a GRU produces the final hidden state

$$h_T \in \mathbb{R}^d,$$

which captures the short-term sequential representation.

(B) Rating-weighted centroid (long-term preference). We compute a per-user weighted centroid:

$$c_u = \frac{\sum_{t=1}^T w_t \, e_{i_t}}{\sum_{t=1}^T w_t}, \qquad w_t = f(r_t) \cdot \kappa(t),$$

where $f(r_t)$ maps ratings to nonnegative weights (e.g., normalized star score) and $\kappa(t)$ is an optional time-decay factor. We apply ℓ_2-normalization to c_u to match cosine similarity geometry.

(C) Exploitation, exploration scoring and gating. For a candidate item i, we compute:

$$s_{\text{exploit}} = \cos(h_T, e_i), \qquad s_{\text{explore}} = -\gamma \cdot \cos(c_u, e_i),$$

where $\gamma > 0$ is a learnable scalar controlling exploration intensity.

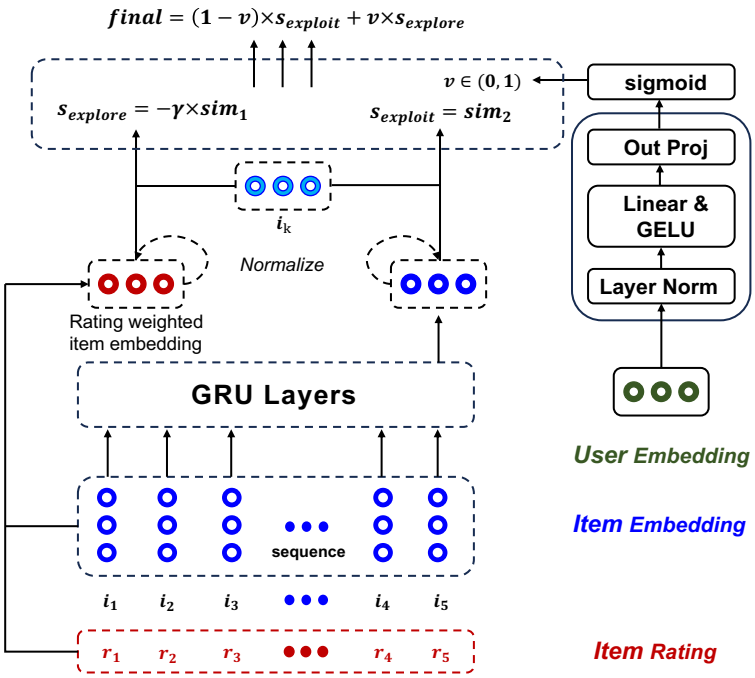

Figure 3. Sign Enhanced GRU4Rec

Gate input (user embedding). In the current design the gate network takes the *user embedding* $u \in \mathbb{R}^{d_u}$ as its primary input (optionally concatenated with c_u or other lightweight user statistics). Concretely, let u denote the learned user embedding for the current user; the gate produces a scalar $v \in (0, 1)$ as

$$v = \sigma\Big(\mathrm{MLP}\big(\mathrm{LN}([u;\, \hat{c}_u])\big)\Big),$$

where $[u;\, \hat{c}_u]$ is the concatenation of the user embedding and the normalized centroid, $\mathrm{LN}(\cdot)$ denotes LayerNorm, $\mathrm{MLP}(\cdot)$ is a small feed-forward network, and σ is the sigmoid function. (If no c_u is used as input, the gate reduces to $v = \sigma(\mathrm{MLP}(\mathrm{LN}(u)))$.)

The final score is a convex mixture:

$$s(i) = (1 - v)\, s_{\text{exploit}} + v\, s_{\text{explore}}.$$

Training objective. We optimize a ranking loss (e.g., BPR or sampled softmax cross-entropy) over positive and negative candidate items. We optionally apply embedding norm regularization.

A.4. Experimental Setup

Dataset. We evaluate our model on the Yelp review dataset. User interaction sequences are sorted chronologically, and users with fewer than five interactions are removed. For each user, the last interaction is held out for testing, the second-to-last for validation, and the remaining interactions form the training set.

Data Augmentation. The original dataset is relatively small (1922 items, 3498 users). To address data sparsity and better capture temporal preference drift, we further construct additional training subsequences. For each user sequence with length greater than three, we perform segmented resampling, yielding 8051 additional subsequences. This augmentation both increases training volume and provides more fine-grained supervision for preference evolution.

Table 3. Performance without data augmentation.

Model	NDCG			HitRatio		
	@10	@15	@20	@10	@15	@20
GRU4Rec	0.162	0.166	0.169	0.401	0.493	0.584
SASRec	**0.221**	**0.227**	**0.230**	**0.544**	**0.651**	**0.734**
STMP	0.082	0.087	0.091	0.273	0.376	0.472
Ours	0.144	0.148	0.152	0.349	0.446	0.536

Table 4. Performance with data augmentation.

Model	NDCG			HitRatio		
	@10	@15	@20	@10	@15	@20
GRU4Rec	0.310	0.315	0.317	0.705	0.796	0.859
SASRec	**0.435**	**0.437**	**0.438**	**0.895**	**0.938**	**0.951**
STMP	0.203	0.209	0.212	0.387	0.510	0.615
Ours	0.424	0.427	0.428	0.847	0.906	0.935

Baselines. We compare our method with three representative sequential recommendation models. **GRU4Rec** employs gated recurrent units to capture sequential dynamics in user-item interactions. **SASRec** is a Transformer-based architecture that models item dependencies through self-attention. **STMP** integrates both short-term and long-term preference signals through hierarchical modeling. **Ours** denotes the proposed framework, which incorporates rating-weighted historical preference representation together with a user-adaptive exploration–exploitation gating mechanism.

All models share the same item vocabulary and embedding dimension. We train with Adam and select hyperparameters based on validation NDCG@10 (early stopping).

Observation. While SASRec achieves the highest accuracy, we find it to be sensitive to hyperparameters. For example, when increasing the item embedding dimension to 256, NDCG@10 drops to $\sim$0.20, whereas GRU4Rec and our model remain stable.

A.4.1. Ablation Study

We analyze the contributions of two components: (1) rating-weighted preference representation, and (2) the user-adaptive exploration–exploitation balancing (gate and learnable γ). We construct the following model variants (all with data augmentation):

- **(A) Rating-Unweighted**: remove rating weights, use uniform averaging.
- **(B) Learnable-γ Only**: disable the user gate, keep learnable γ.
- **(C) Gate-Only**: remove learnable γ, keep the user gate (with fixed $\gamma = 1$).
- **(D) No-Gate-No-γ**: remove both, simple exploitation/exploration averaging.

Discussion. Rating-weighted preference estimation consistently improves accuracy, though modestly. The learnable exploration strength γ has the largest impact, outperforming the user gate alone. This suggests that in Yelp, user preferences exhibit strong temporal volatility, making stability prediction from a single sequence challenging for a user-level gate.

B. Text Analysis

This study takes user review texts from the **Yelp** platform as the primary research object, aiming to systematically explore the lexical and semantic differences among reviews with different sentiment orientations through **text mining** techniques.

Table 5. Ablation results (with data augmentation).

Variant	NDCG			HitRatio		
	@10	@15	@20	@10	@15	@20
(C) Gate-Only	0.429	0.432	0.432	0.847	0.899	0.924
(B) Learnable-γ Only	**0.495**	**0.497**	**0.497**	**0.919**	**0.959**	**0.969**
(D) No-Gate-No-γ	0.143	0.148	0.151	0.349	0.446	0.536
(A) Rating-Unweighted	0.405	0.408	0.409	0.806	0.862	0.894

The objective is to uncover the patterns of emotional expression in user evaluations and provide empirical evidence for understanding the characteristics of user feedback.

B.1. Data Source and Preprocessing

The research data are obtained from the **Yelp dataset**, focusing on two key analytical variables: the *rating stars (stars)* and the *review text (text)*. To ensure the validity and reliability of the analysis, data preprocessing was first performed by removing samples with missing review texts and retaining only valid observations with complete information. The resulting dataset serves as the foundation for subsequent analyses.

B.2. Sentiment Classification

Based on the relationship between user ratings and emotional expression, the reviews are divided into three sentiment-oriented groups to capture varying degrees of user attitudes:

- **Positive sentiment group**: reviews rated 4 or 5 stars;
- **Neutral sentiment group**: reviews rated 3 stars;
- **Negative sentiment group**: reviews rated 1 or 2 stars.

This classification effectively differentiates reviews by sentiment polarity and provides a clear structure for subsequent lexical and semantic analyses.

B.3. Text Feature Extraction and Visualization

For each of the three sentiment groups, this study performs text feature extraction and visualization from two main perspectives: **high-frequency word analysis with word cloud visualization** and **word co-occurrence network analysis**.

(1) High-Frequency Word Analysis and Word Cloud Visualization. Each sentiment group's review texts were first standardized through word segmentation, stop-word removal, and symbol cleaning to extract meaningful lexical units. Subsequently, word frequency statistics were applied to identify the most representative words in each sentiment category. A **word cloud** visualization was then generated, using templates and color schemes that correspond to the respective sentiment orientation, thereby intuitively illustrating the dominant lexical themes within each group.

(2) Word Co-occurrence Network Analysis. To further explore the associative patterns among words, the **sliding window method** was used to calculate word co-occurrence frequencies, followed by filtering out low-frequency connections to construct a co-occurrence network for each sentiment group. The resulting networks were visualized to display the strength and structure of lexical associations, revealing the combinatorial logic underlying different emotional expressions. For example, positive reviews often exhibit strong co-occurrence among positive descriptive terms, whereas negative reviews show tightly connected clusters of negatively connoted words. This analysis provides deeper insights into the linguistic structures that shape emotional expression in user-generated content.

As shown in Figure 5, the textual analysis of the "positive" group clearly reveals the core dimensions of user attention in favorable reviews. The overall lexical distribution can be summarized into three interconnected evaluative logics. In

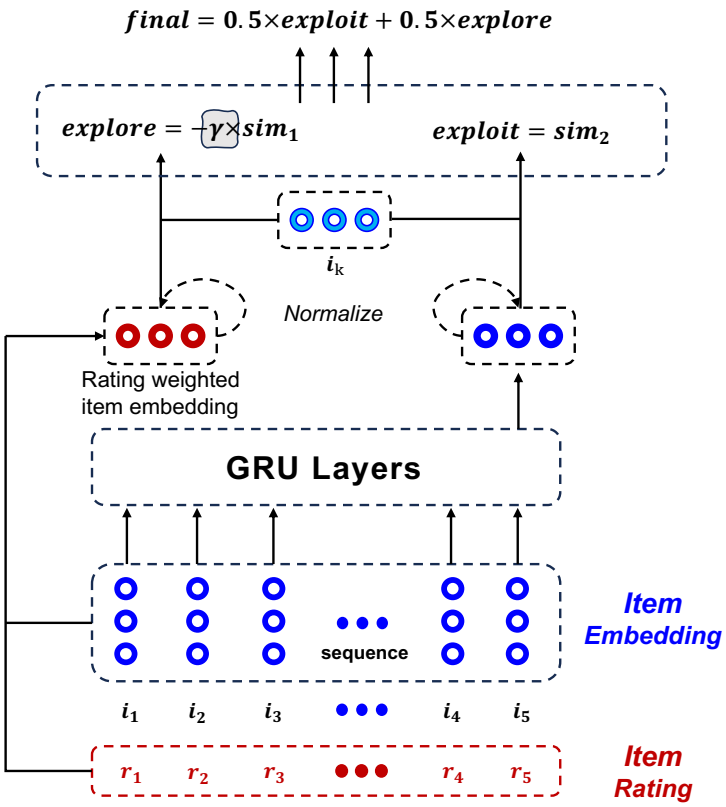

Figure 4. Sign Enhanced GRU4Rec (Without Gate)

terms of core vocabulary, expressions related to food quality—such as “delicious,” “great food,” and “flavor”—appear with high frequency and are often accompanied by strong affective adjectives like “perfect” and “amazing,” forming a direct association of “quality recognition – emotional reinforcement.”

Service experience constitutes another key dimension. Terms such as “friendly staff,” “customer service,” and “helpful” are densely distributed, indicating that staff attitude and professionalism are critical drivers of positive emotions. Notably, words like “highly recommend,” “come back,” and “next time” are situated near quality- and service-related terms, suggesting a transformation of user intention: excellent service and product quality not only enhance immediate satisfaction but also stimulate repurchase willingness and recommendation behaviors.

In addition to strong affective words, the presence of terms such as “first time” and “visit” indicates that positive first-time experiences play a foundational role in shaping user impressions. Meanwhile, detail-oriented words such as “quick” and “clean” enrich the depiction of positive scenarios—highlighting efficiency and cleanliness as implicit factors reinforcing the overall “food–service” dual core. Collectively, the word network of positive reviews centers on “quality and service,” strengthened by emotional intensifiers and behavioral intention words, illustrating users’ comprehensive approval of the merchant.

As shown in Figure 6, the word cloud of neutral reviews exhibits a relatively moderate evaluation pattern. Core terms like “good,” “place,” and “food” reflect users’ acknowledgment of basic product quality, yet lack the strong emotional tone observed in the positive group. Words such as “price,” “order,” and “menu” focus on the consumption process and cost, while “little,” “way,” and “even” imply minor shortcomings or plain experiences. Overall, the neutral group demonstrates evaluations that are balanced and objective, describing the consumption experience without distinct emotional polarity.

As shown in Figure 7, the word cloud for the “negative” group highlights users’ dissatisfaction. Frequent terms like “even,”

Figure 5. (a) Positive

Figure 6. (b) Neutral

Figure 7. (c) Negative

Figure 8. Word cloud visualization for reviews with different sentiment polarities.

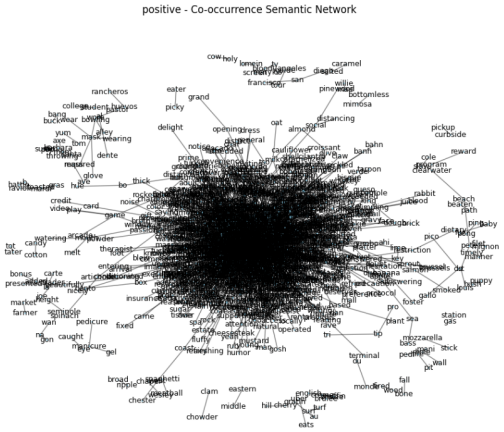

Figure 9. (a) Positive

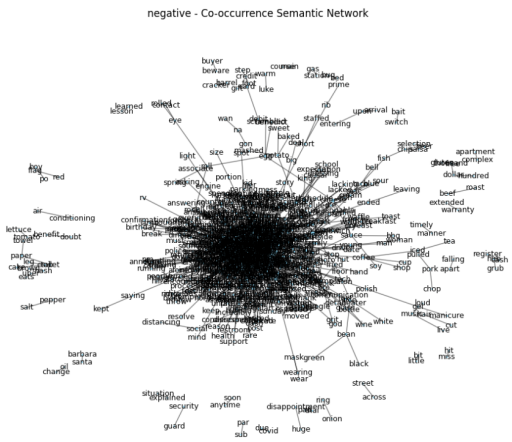

Figure 10. (b) Negative

Figure 11. Comparison of semantic co-occurrence networks for positive and negative reviews. Nodes represent keywords, and edges indicate co-occurrence relationships within the same review sentence. The network density and cluster structure reveal distinct semantic patterns associated with user sentiment polarity.

"problem," and "need" indicate complaints and unmet expectations during the consumption process. Words such as "table," "employee," and "service" reveal deficiencies in operation and staff performance, whereas "price" and "wait" point to cost and efficiency concerns. The overall lexical network conveys disappointment toward the merchant's service, process, or product quality, directly embodying users' negative experiences.

As shown in Figure 9, the semantic co-occurrence network of positive reviews intuitively illustrates the associative patterns among words in Yelp's positive sentiment texts. The core region of the network exhibits a high density of nodes and edges, indicating a substantial number of frequently co-occurring word pairs. These co-occurrences constitute the central semantic clusters through which users express positive emotions. Typical examples include terms related to *food experience* (e.g., "delight", "yum"), *service scenarios* (e.g., "pickup", "curbside"), and *consumption details* (e.g., "credit card", "reward"), which collectively reflect the multidimensional and integrated nature of positive user experiences. Peripheral nodes, such as "pedicure", "rancheros", and "cow holy", appear more sparsely and correspond to niche contexts or specific experiences. This distribution further highlights that positive reviews are semantically centered on common dimensions such as *tasty food*, *efficient service*, and *pleasant experience*, forming a cohesive semantic network characterized by high-frequency aggregation and multidimensional interconnection.

As shown in Figure 10, the semantic co-occurrence network of negative reviews reveals dense clusters of frequently co-occurring negative terms within the core area, indicating concentrated user dissatisfaction with aspects such as service quality and product experience. The peripheral words are relatively scattered, often describing specific negative scenarios.

Overall, the network demonstrates a sentiment-driven structure centered on negative experiences, which intuitively captures the linguistic patterns of complaint and dissatisfaction that dominate negative reviews.