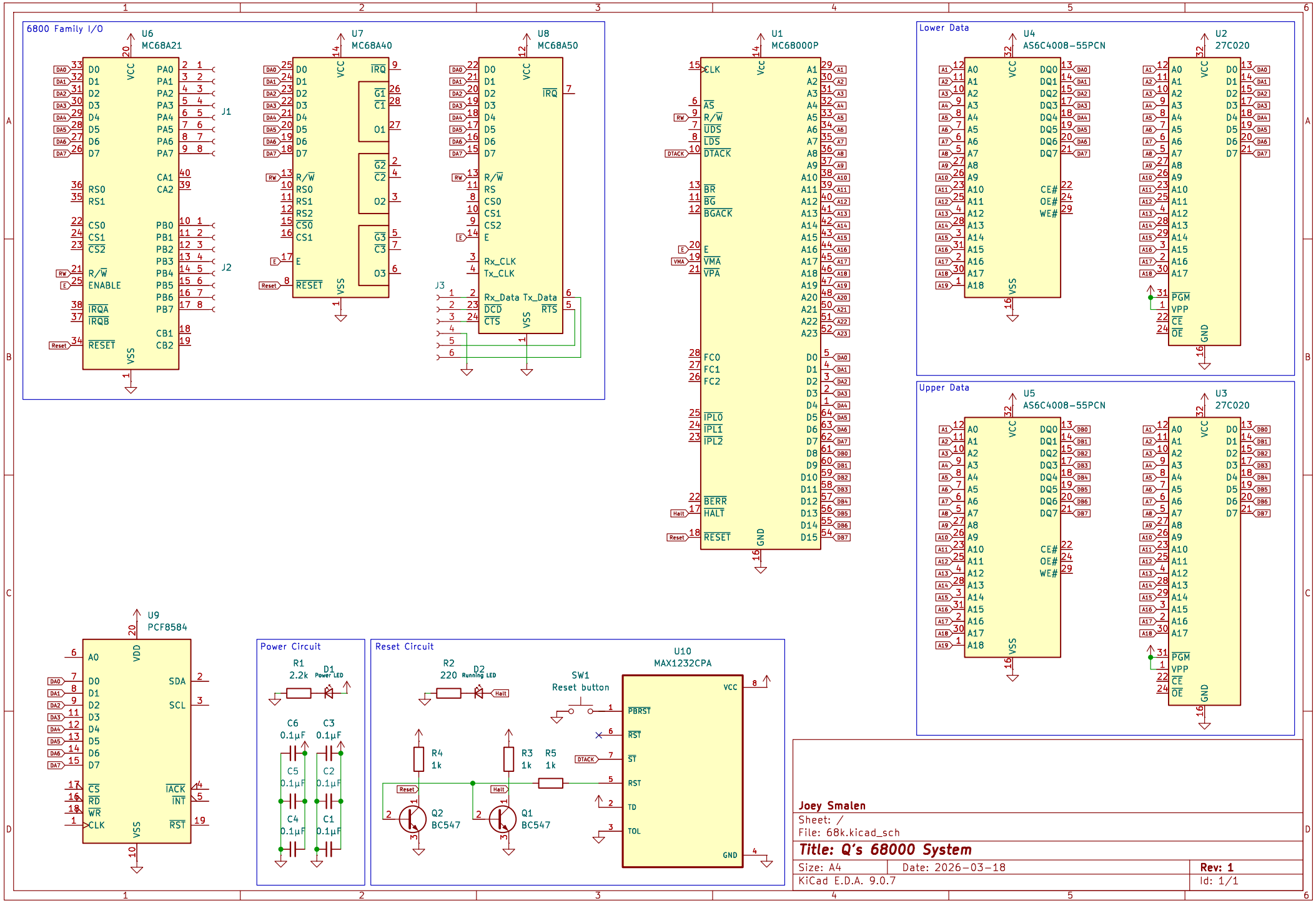

Joey Smalen

Sheet: /

File: 68k.kicad_sch

Title: Q's 68000 System

Size: A4	Date: 2026-03-18	Rev: 1
KiCad E.D.A. 9.0.7		Id: 1/1