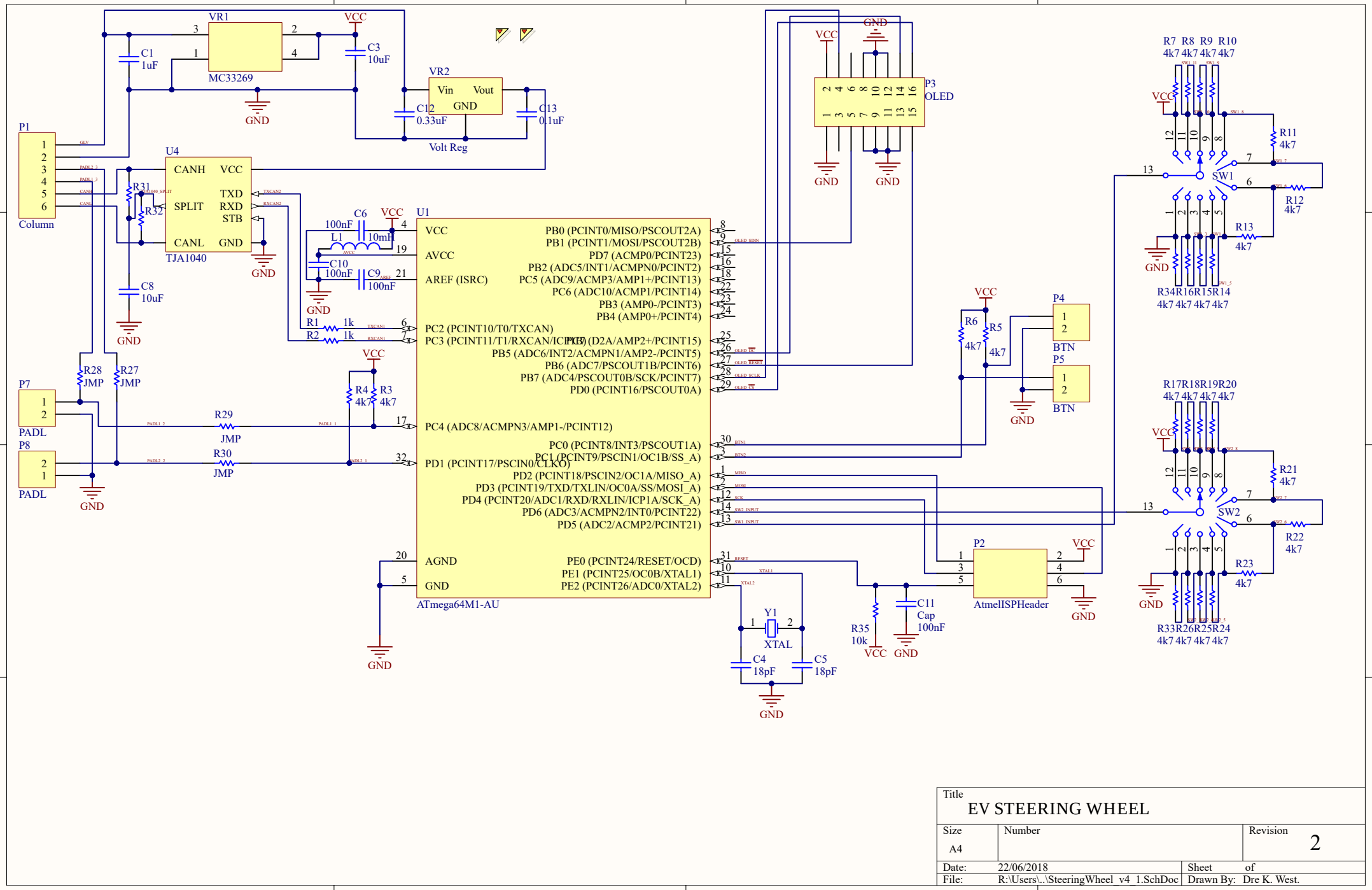

Title	EV STEERING WHEEL	
Size A4	Number	Revision 2
Date: 22/06/2018		Sheet of
File: R:\Users\..\SteeringWheel_v4_1.SchDoc		Drawn By: Dre K. West.