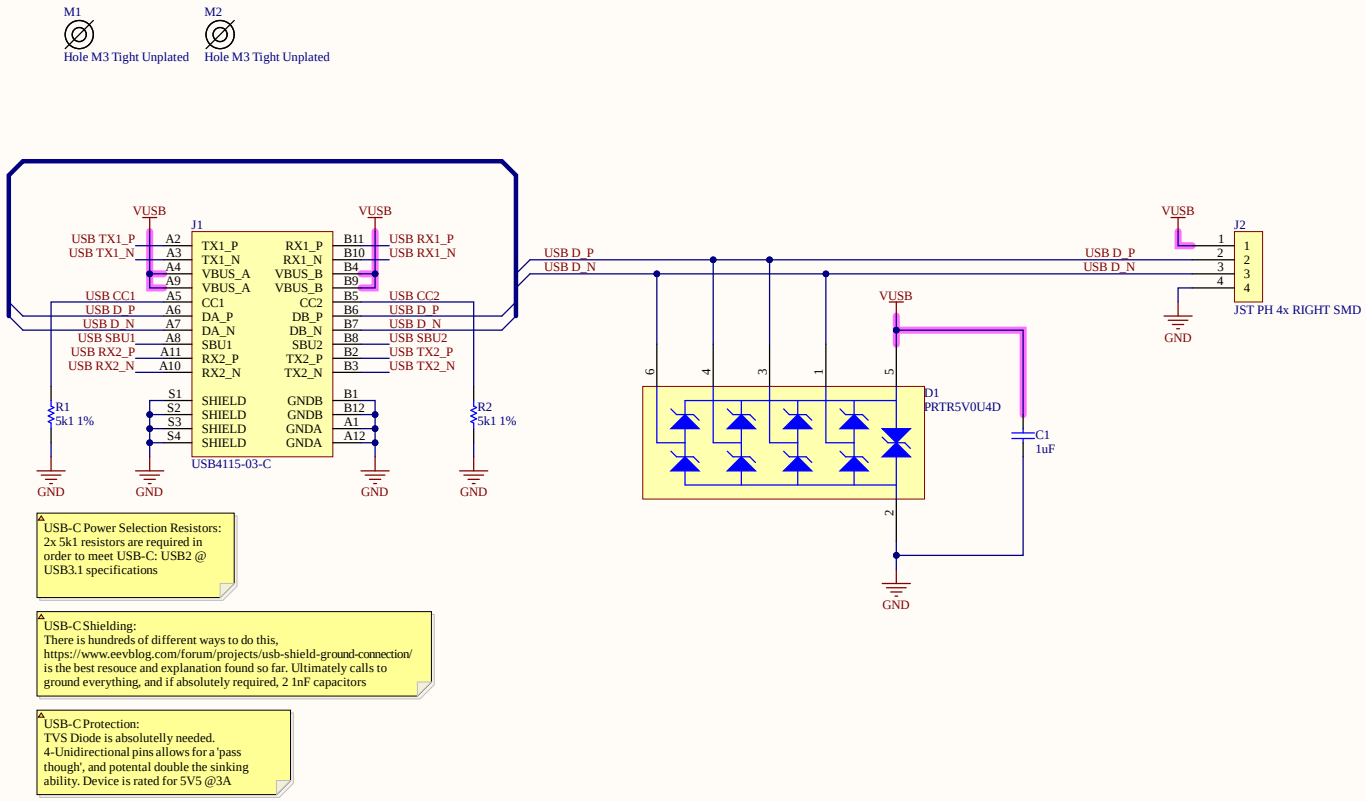

USB-C Power Selection Resistors:
2x 5k1 resistors are required in order to meet USB-C: USB2 @ USB3.1 specifications

USB-C Shielding:
There is hundreds of different ways to do this, https://www.eevblog.com/forum/projects/usb-shield-ground-connection/ is the best resouce and explanation found so far. Ultimately calls to ground everything, and if absolutely required, 2 1nF capacitors

USB-C Protection:
TVS Diode is absolutelly needed.
4-Unidirectional pins allows for a 'pass though', and potental double the sinking ability. Device is rated for 5V5 @3A

Revision History:

Rev	Date	Description

Sheet Title: **RADU USB Connectivity (USB-C, ESD Protection, PH2.0)**

Project: **QUTMS RADIO USB**

Size: A3 | Number: **1** | Version: **00** | Revision: *****

Drawn By: Jonn Dillon | Sheet **1** of **1**

Print Date: 15/02/2021 Print Time: 12:49:43 PM | File Name: RADU-Master-S00-V00.SchDoc

QUT Motorsport
Q-120, Gardens Point
2 George Street
Brisbane, QLD 4000
Australia