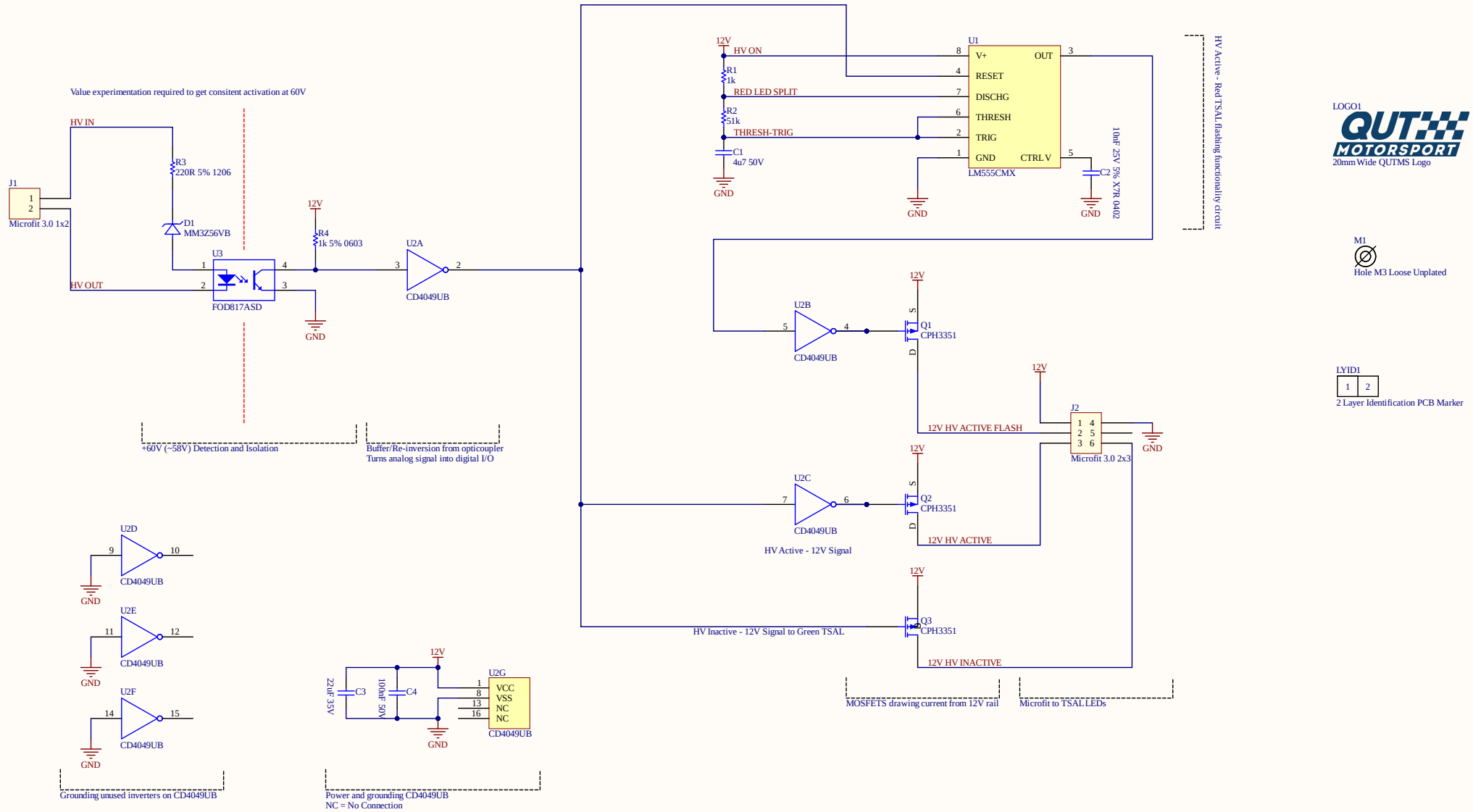

Revision History:

Rev	Date	Description

Sheet Title: TSAL Control			
Project: TSAL			QUT Motorsport Q-120, Gardens Point 2 George Street Brisbane, QLD 4000 Australia
Size: A3	Number: 1	Version: 00 Revision: 2	
Drawn By: Tom Benedetti		Sheet 1 of 2	
Print Date: 24/09/2020	Print Time: 5:56:18 PM	File Name: TSAL-S01-V00-Control.SchDoc	

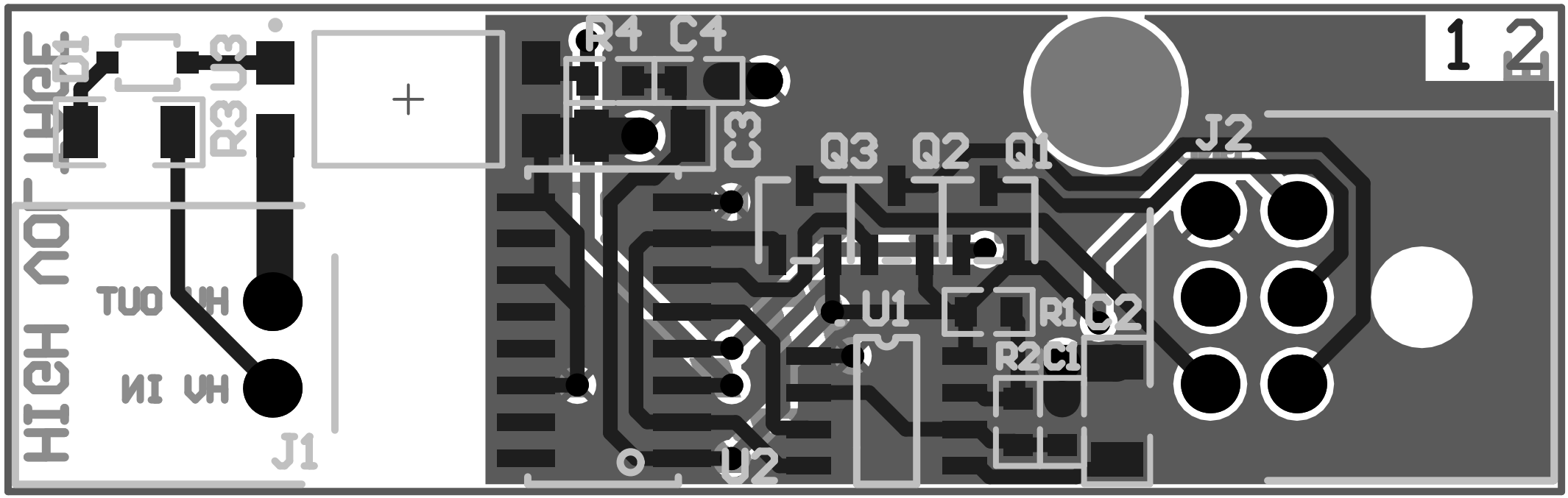
HIGH VOLTAGE
Q4
R3
U3
TUO VH
NI VH
J1
R4
C4
C3
Q3
Q2
Q1
U1
U2
R1
Q2
R2
C1
J2
1
2

Board Stack Report