AI-powered Conversational Assistant App

Final Year Project Proposal

Session 2022-2026

A project submitted in partial fulfilment of the
COMSATS University Degree
of
BS in Computer Science / Software Engineering (CUI)

Department of Computer Science

COMSATS University Islamabad, Lahore Campus

01 May 2025

Project Registration

Project ID (for office use)	
Type of project	[✓] Traditional [ ] Industrial [ ] Continuing
Nature of project	[ ] Development [✓] Research & Development
Sustainable Development Goals(SDGs)	[ ] Good Health and Well-Being [✓] Quality Education [ ] Industry, Innovation, and Infrastructure [ ] Gender Equality [ ] Decent Work and Economic Growth [ ] Climate Action
Area of specialization	[✓] Artificial Intelligence (AI) [ ] Data Science and Analytics [ ] Internet of Things (IoT) [ ] Blockchain [✓] Mobile App Development [ ] Web Development [ ] Cybersecurity [ ] Game Development [✓] Natural Language Processing (NLP)

Project Group Members

Sr.#	Reg. #	Student Name	CGPA	Email ID	Phone #	Signature
(I)	FA22-BCS-025	Muhammad Ahmad	3.55	qdevaan@gmail.com	03137933766	Qdevaan
(ii)	FA22-BCS-164	Attique Rehman Alias Adeel	3.58	sahitoattique@gmail.com	03083872646	

Declaration: FYP group members have cleared all prerequisite courses for FYP-I as per their degree requirements.

For BS(Computer Science)

(CSC241 Object Oriented Programming, CSC291 Software Engineering Concepts, CSC371 Database Systems-I, HUM102 Report Writing Skills)

For BS(Software Engineering)

(CSC241 Object Oriented Programming, CSE291 Introduction to Software Engineering , CSC371 Database Systems-I , HUM102 Report Writing Skills)

Plagiarism Free Certificate

This is to certify that, I am Muhammad Ahmad S/O Umer Farooq, group leader of FYP under registration no CUI /FA22-BCS-025/LHR at the Computer Science Department, COMSATS Institute of Information Technology, Lahore. I declare that my FYP proposal is checked by my supervisor and the similarity index is _____% that is less than 20%, an acceptable limit by HEC. The report is attached herewith as Appendix A.

Date: 13 March 2025 Name of Group Leader: Muhammad Ahmad Signature: Qdevaan

Name of Supervisor: _____ Co-Supervisor (if any): _____

Designation: _____ Designation: _____

Signature: _____ Signature: _____

Project Abstract

The aim of our project is to enhance communication skills by using AI and NLP to assist during and after conversations. It aims to recognize the tone and flow of discussions, provide real-time suggestions for impactful responses, and help users understand industry-specific jargon. By analysing conversations, it offers tailored tips to improve communication, ensuring users can refine their skills over time. The tool not only transcribes and summarizes conversations but also finds key participants, highlights key details, and provides actionable insights. It includes a "replay" feature that suggests alternative phrases or approaches, helping users reflect on what could have been said more effectively. Whether it is a formal business meeting, an informal chat, or a professional negotiation, this AI-powered assistant is designed to support users in becoming more confident and articulate communicators. **The goal is to empower not just professionals but also everyday individuals to communicate more effectively, ensuring every conversation is impactful and meaningful.**

1 Introduction

Every day we have numerous conversations in various formal, informal, and business settings. All conversations are significant, but much information is usually spared, forgotten, or missed. However, the way we deliver certain messages or demands is crucial in any profession, during a conversation, or negotiation. At times, the appropriate word, business lingo, or even a clever reference to a movie could have made the conversation better, but such realizations are often made rather late.

The purpose of our project is to create a smart assistant that can not only capture, summarize, and analyze conversations in real-time but also assist people in improving their communication skills. The system will determine the tone of the conversation, map the flow of the conversation, provide instant responses, suggest strong phrases, and comment on the clarity, structure, and engagement of the conversation. It will assist in understanding terminology, improve the delivery of speech, and monitor the user’s communication development.

The assistant will also have a ‘replay and review’ function that will enable the user to relive conversations with tips on what could have been done differently regarding the choice of words or phrasing. It will summarize the main points, determine who spoke, what happened, and when, and provide specific feedback on how to improve communication skills. Also, to enhance engagement, the system will incorporate a gamified element—tracking progress, giving points for improvement, and providing a dashboard to view recurring errors and successes.

This AI-enabled assistant is not only for professionals who want to improve their business communication but also for people who want to communicate effectively in any situation. This smart conversational assistant can not only function as a conversation summarizer and analyzer in real-time but also help people enhance their communication skills.

The following are the primary stakeholders of the system:

- **Users:** Individuals who use the assistant for notetaking, summaries, transcription, and conversation analysis.
- **Administration:** Responsible for keeping data integrity, updating models, and managing system performance.

The following is a brief explanation of each module in the proposed project:

- **Data Collection Module**
    - Captures real-time audio conversations and converts them into text transcripts.
    - Uses speech-to-text models or train a custom model for correct transcription.
    - Stores audio recordings with timestamps for users to replay conversations or review transcriptions.

- **Data Preprocessing and Cleaning Module**
    - Removes background noise, filler words, and irrelevant text to enhance transcription accuracy.
    - Normalizes text by correcting grammatical errors and standardizing punctuation for better readability.
    - Highlights key phrases and key details for quick reference.

- **Speaker Diarization Module**
    - Features from cleaned audio will be extracted., based upon frequencies.
    - Using clustering techniques, different speakers will be identified.
    - Speaker ids will be given, and similar voices will be issued same ids.

- **Key Information Extraction Module**
    - Identifies and highlights key details such as names, dates, tasks, action points, and key discussion topics.
    - Uses Natural Language Processing (NLP) techniques and Named Entity Recognition techniques to extract relevant information.

- **Summarization Module**
    - Condenses long conversations into concise summaries while retaining essential details.
    - Uses AI-based summarization models (e.g., BART, T5, Pegasus) for structured and coherent summaries.

- **Conversation Analysis & Feedback Module**
    - Evaluates speech clarity, engagement, tone, and structure.
    - Provides actionable feedback by detecting common mistakes such as hesitations, redundant words, or unclear phrasing.

- Highlights mistakes directly in the transcript and allows users to review feedback with timestamps.
- Tracks recurring mistakes and improvement trends over time.

- **Performance Tracking & Gamification Module**

  - Awards points based on speech improvement, clarity, and reduced mistakes.
  - Tracks recent mistakes, progress, and frequently occurring errors on a personalized dashboard.
  - Encourages engagement through progress reports and performance-based achievements.
  - Learn new phrases and difficult words everyday, and rewards if user uses them in their daily conversations.

- **User Interface Module**

  - Provides an interactive dashboard displaying:

    - Transcripts with timestamps and highlighted feedback.
    - Summarized insights for quick review.
    - Notable events that are soon to happen.
    - Reminders for tasks pending.
    - Performance metrics such as improvements, frequent mistakes, and points earned.

  - Ensures a user-friendly experience with playback options and easy-to-navigate reports.

- **Administration Module**

  - Manages user data, system updates, and AI model improvements.
  - Overseas that app usage does not violates any usage rules defined by the system developers.
  - Manages user access control, data security, and storage of conversation history.
  - Oversees app performance monitoring and bug fixes for a seamless user experience.

2 Success Criterion

The success of the **AI-powered conversational assistant** app will be determined based on following key factors:

- **Accuracy of Transcription and Summarization**

  - The ability of the AI to correctly convert speech into text with minimal errors.
  - The effectiveness of automated summarization in capturing key points concisely.
  - Success is measured by word error rate (WER) in transcription and summary coherence based on user feedback.

- **Relevance and Quality of Feedback**
    - The assistant should accurately highlight mistakes, such as unclear phrasing, hesitation, or redundant words.
    - Success is measured by the accuracy of tone analysis, grammar corrections, and communication improvement suggestions.
    - Feedback should be customized to different conversation types (e.g., casual talks vs. formal discussions).

- **User Adoption and Engagement**
    - The number of active users and repeat interactions with the assistant.
    - User engagement through dashboard interactions, reviewing transcripts, and revisiting recommendations.
    - Positive user feedback on the clarity and helpfulness of insights provided by the AI.

- **Performance Tracking and Gamification Impact**
    - The effectiveness of the point-based reward system in motivating users to improve communication.
    - Improvement in user scores over time, showing reduced mistakes and better communication skills.
    - Success is measured by user retention rates and engagement with performance reports.

- **Scalability and Performance**
    - The system should manage large-scale conversations with minimal latency.
    - Efficient real-time processing of speech-to-text, summarization, and feedback generation.
    - Success is measured by response time, system uptime, and seamless processing of user data.

- **Continuous Learning and Improvement**
    - The AI should adapt and refine feedback based on historical conversations and user corrections.
    - Machine learning models should improve error detection, sentiment analysis, and speech analysis over time.
    - Success is measured by increased accuracy in finding speech patterns and better personalized feedback.

- **Data Privacy and Security Compliance**
    - Ensuring user conversations stay private and securely stored.
    - Compliance with data protection laws (e.g., GDPR) and secure handling of sensitive conversation data.
    - Success is measured by zero security breaches and high user trust in data privacy measures.

By meeting these success criteria, the AI-powered assistant will effectively enhance communication, improve conversation tracking, and offer valuable insights for personal and professional growth.

3 Related work

Our project draws inspiration from many existing works, that a re being implemented idividually, but here we try to make an assistant than can leverage all these tools and techniques, improve on them and produce better results:

1. **Key Information Extraction Module**

Named entity recognition (NER)—also called entity chunking or entity extraction—is a component of natural language processing (NLP) that identifies predefined categories of objects in a body of text [2], [3]. These categories can include, but are not limited to, names of individuals, organizations, locations, expressions of times, quantities, medical codes, monetary values, and percentages, among others [2], [3]. NER plays a significant role in social media analysis, identifying key entities in posts and comments to understand trends and public opinions about different topics [2], [3].

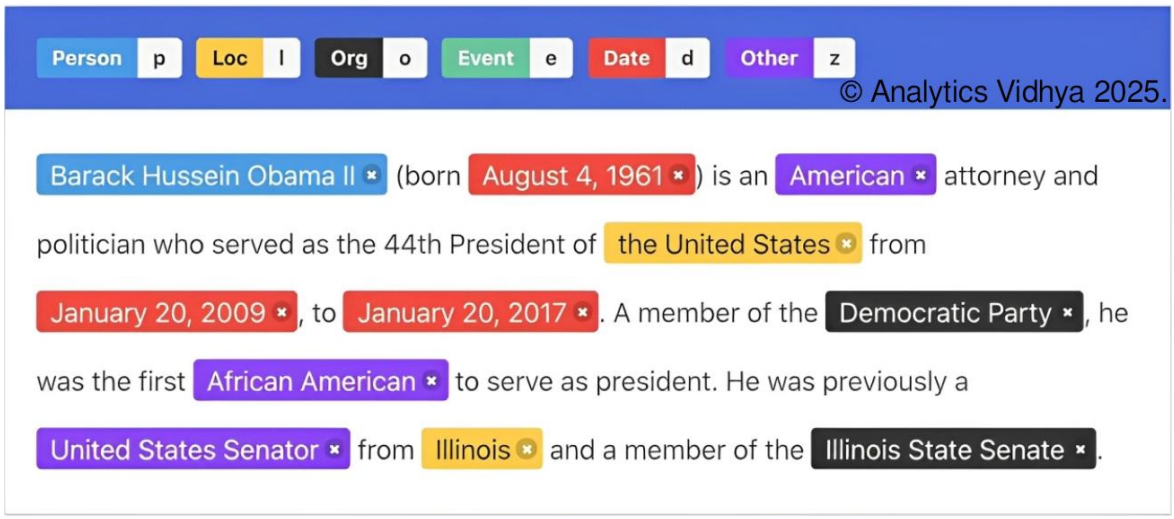

2. **Summarisation using BART**

Based on the comparisons above, we can observe many benefits (and potential benefits) of using BART for summarization [4]. BART is resilient to real-world noisy data, produces grammatically correct summaries, is simple to fine-tune, and runs efficiently even on CPUs without GPUs. It has an efficient model size comparable to smaller GPT-3 models, making it a viable choice for various domains [4].

Model	SQuAD 1.1 F1	MNLI Acc	ELI5 PPL	XSum PPL	ConvAI2 PPL	CNN/DM PPL
BERT Base (Devlin et al., 2019)	88.5	**84.3**	-	-	-	-
Masked Language Model	90.0	83.5	24.77	7.87	12.59	7.06
Masked Seq2seq	87.0	82.1	23.40	6.80	11.43	6.19
Language Model	76.7	80.1	**21.40**	7.00	11.51	6.56
Permuted Language Model	89.1	83.7	24.03	7.69	12.23	6.96
Multitask Masked Language Model	89.2	82.4	23.73	7.50	12.39	6.74
BART Base						
w/ Token Masking	90.4	84.1	25.05	7.08	11.73	6.10
w/ Token Deletion	90.4	84.1	24.61	6.90	11.46	5.87
w/ Text Infilling	**90.8**	84.0	24.26	**6.61**	**11.05**	5.83
w/ Document Rotation	77.2	75.3	53.69	17.14	19.87	10.59
w/ Sentence Shuffling	85.4	81.5	41.87	10.93	16.67	7.89
w/ Text Infilling + Sentence Shuffling	**90.8**	83.8	24.17	6.62	11.12	**5.41**

3. Text-to-Speech and Vice Versa

Many models are available on the market with different quality levels; however, some are very impressive while consuming excessive resources [1]. Our target is to run TTS and STT processes on Raspberry Pi 4 devices with just 4GB of memory, enabling offline functionality even on lightweight devices [1].

4. LanguageTool

LanguageTool is free and open-source grammar, style, and spell checker. All its features are available for download [5]. Unlike traditional grammar checkers, LanguageTool does not check sentence for absolute grammatical correctness but instead detects typical errors [5]. Error detection is implemented using variety of rules based on XML or written in Java [5].

5. Grammarly

Grammarly is an English-language writing assistant software tool [6]. It reviews spelling, grammar, and tone, identifying potential errors and providing suggestions to improve clarity and coherence [6].

6. LangChain

LangChain is a framework for developing applications powered by large language models (LLMs) [7]. It chains together different AI models (e.g., speech-to-text, summarization, and sentiment analysis) so they work step by step without manual intervention [7]. It can also suggest style and tonal recommendations to users and produce writing from prompts with its generative AI capabilities [7].

7. Speaker Diarization [Our Research Area]

Speaker extraction and diarization are two enabling techniques for real-world speech applications [8]. Speaker extraction aims to extract a target speaker's voice from a speech mixture, while speaker diarization marks speech segments by speaker, annotating "who spoke when" [8]. Previous studies have typically treated the two tasks independently [8]. In this paper, we propose a unified model called Universal Speaker Extraction and Diarization (USED) to address output inconsistency and scenario mismatch issues [8].

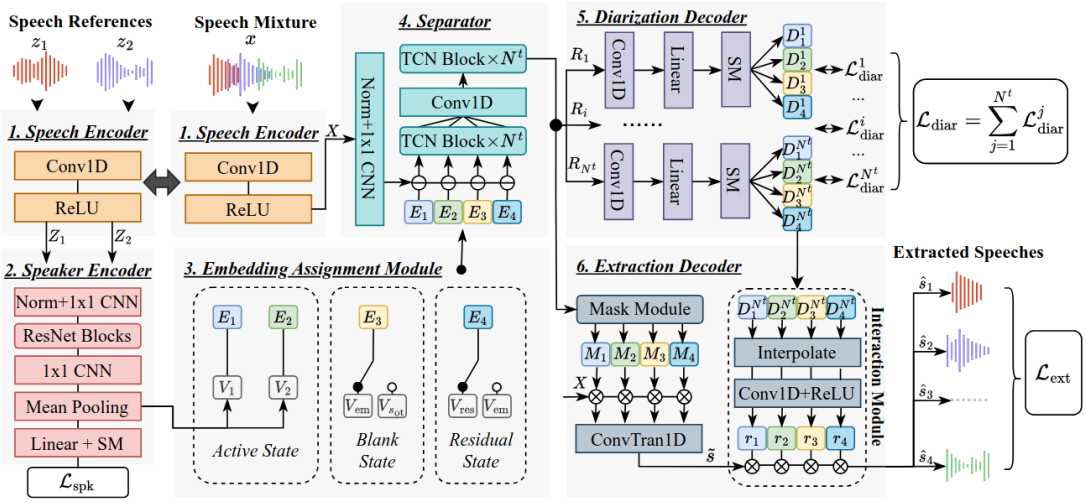

It is designed to manage speech mixtures with varying overlap ratios and a variable number of speakers [8]. Speaker diarization is a classic task in speech processing and is crucial in multi-party scenarios such as meetings and conversations [9]. We introduce two sub-tasks, Dialogue Detection and Speaker-Turn Detection, where we effectively extract speaker information from conversational semantics [9]. We also propose a simple yet effective algorithm to jointly model acoustic and semantic information and obtain speaker-identified texts [9]. Experiments on AISHELL-4 and AliMeeting datasets show that our method achieves consistent improvements over acoustic-only speaker diarization systems [9]. Speaker diarization is a task to label audio or video recordings with classes corresponding to speaker identity, or in short, a task to identify "who spoke when" [10]. In this paper, we review not only the historical development of speaker diarization technology but also the recent advancements in neural speaker diarization approaches [10]. pyannote.audio is an open-source toolkit written in Python for speaker diarization [11]. Based on the PyTorch machine learning framework, it comes with state-of-the-art pre-trained models and pipelines that can be further fine-tuned on custom datasets for better performance [11].

4 Project Rationale

As a student, sometime after a conversation ends, I realize the words that I used were not appropriate for the conversation and I could have done it in a better way, or how could I have delivered my message more clearly and made my conversation more engaging? But then, after some time passes, I forget all the points that I wanted to keep in mind. As a student, it is very difficult to carry a notebook and a pen everywhere and note down every minute details of the conversations or the lectures that I am attending, but I do carry my phone everywhere, so why not use my phone automatically to do this for me? This thought gave me the idea and inspiration for this project. Every student and every professional these days carries a mobile phone, so why not use it as an assistant among all the other tasks that it can perform? So, to further nourish our capabilities in machine learning, mobile app development, and natural language processing, we chose this as our FYP project, as we will incur many challenges and learn to use all the latest tools and techniques to make our idea a reality.

4.1 Aims and Objectives

The main objective of our project is to make an AI assistant that is just like a real assistant at your disposal, not only taking notes but also improving your conversational skills. It will also help the user retain their conversation data and improve and work on it on the go. These are the main objectives we would like to achieve during the development of this project:

- **Real-Time Transcription:** Capture and convert spoken conversations into correct text transcripts from audio or video sources using speech-to-text models.
- **Real-Time Replies: Analyse** the conversation and generate proper replies based on the context and tone of the conversation.
- **Real-Time Difficult words meaning:** Find and show the proverbs, adverbs or jargon used in the conversation and what do they mean in the context of conversation.
- **Data Preprocessing & Cleaning:** Enhance transcription accuracy by removing background noise, filler words, and grammatical errors.
- **Speaker Identification:** Differentiate between multiple speakers using clustering techniques and assign unique speaker IDs to each.
- **Key Information Extraction:** Find and highlight important discussion points, including names, dates, tasks, and action items, using NLP techniques.
- **Summarization:** Generate concise and structured summaries of conversations while preserving essential details.
- **Conversation Analysis & Feedback:** Evaluate speech clarity, engagement, and structure, providing real-time feedback on grammar, redundancy, and effectiveness.
- **Performance Tracking & Gamification:** Encourage improvement through a progress dashboard, points-based incentives, and learning challenges.
- **User-Friendly Interface:** Develop an interactive dashboard with transcripts, playback options, summaries, event reminders, and performance insights.
- **Administrative Control & Security:** Ensure data integrity, manage user access, check system performance, and enforce usage policies for secure interactions.

4.2 Scope of the Project

The scope of this project encompasses the development of an AI-powered conversational assistant app that enhances communication by transcribing, analyzing, and refining conversations in real time. A mobile application and website will be made for the users' convenience and comfort. Both interfaces will retrieve the data from single backend service to ensure integrity and coherence of information. In live mode, user will have the ability to choose the mode of their conversation to get proper suggestions in real-time. These suggestions will be made in real-Time, our app will support different modes, like Formal, for business conversations, Semi Formal, for events where we have some leniency in our conversations, like to quote a movie or a poetry verse to lighten the mood, and Casual mode to talk to friends, suggesting in conversations related points like if you are discussing the movies, then suggesting a list of good m movies, or similar locations to visit. They can also upload any information relating to the conversation, so the app can assist them by giving well structured answer to asked questions, that they can simply dictate. At the end of conversation, a speaker diarization module will filter out the user's voice for further recommendation and suggestions. The recorded audio is then transcribed and timestamped. The recorded conversation is summarised for user to keep track of all their interactions,

which may be used as a reference in future conversations. The grammar checker will identify mistakes in the transcribed text and give suggestions to the user. Another module will also suggest idioms and appropriate words that can be used instead of what user used in the conversation. Frequently made mistakes will be recorded so users get daily notification to be mindful of the mistakes when going about their day. Finally, all this will be converted into a point-based game, that will incentivise the user with ranks based on their personal growth (e.g. forest app). Final deliverables may vary but our team will try their best to complete all the points and implement any features that we deem are necessary.

To make it clear, this will be an independent app which requires microphone access and permissions to display over other apps, so it can show in real time on screen, gather live data and process it and make suggestions, improvements based upon the gathered live data. And then you(user) can use the suggestion as it is, or however he may find it good.

Proposed Methodology and Architecture

The iterative software life cycle will be employed to develop this system. In this methodology, each module will be produced independently. It will be thoroughly evaluated as a standalone module before being integrated with a core system. Finally, it will be evaluated after the integration to resolve any injection errors. This approach makes each module easily scalable and maintainable.

The system has four main layers.

1. User Interaction Layer:

This layer is the mobile app that will be developed for user interaction. Users can sign up and sign in via the app. They can upload their recordings or record their voices live. In analytics portion they can find summaries, insights and feedback based on their recordings. They can track their progress and how well they have improved their communication skills via gamification system.

2. Data Storage & Management Layer:

In this layer, all the user data is saved in a database. Their voices they recorded and uploaded are saved in audio file format for further usage. All the user transactions and insights gathered from their communication are recorded. This layer is comprised of database(s) that stores all the useful information.

3. AI Processing Layer:

This layer manages all AI tasks step by step.

- Speech-to-Text Model: Converts speech into text.
- Text Cleaner: Fixes grammar removes filler words.
- Summarization Model: Creates short summaries.
- Improvement Tracker: gives feedback to help users improve.

4. Admin & Monitoring Layer:

On this layer, admins can see user feedback and activity. Admins can monitor system performance and operations. Any misuse or misconduct will be dealt with immediately since an admin will have all the rights to block a user from misconduct. In case a model is underperforming the admins will use the iterative approach to first fix the model locally then integrate it into production.

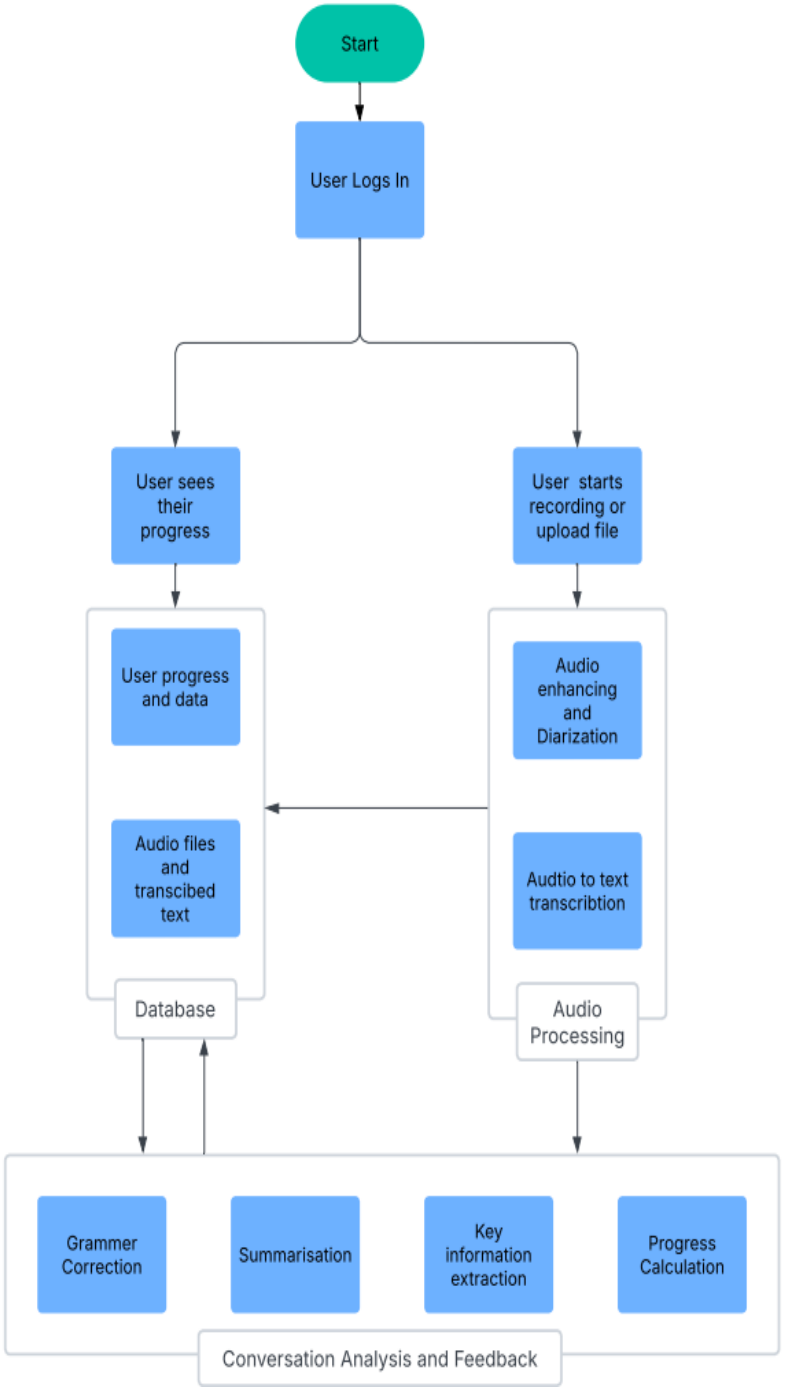
Start
User Logs In
User sees their progress
User starts recording or upload file
User progress and data
Audio files and transcibed text
Database
Audio enhancing and Diarization
Audtio to text transcribtion
Audio Processing
Grammer Correction
Summarisation
Key information extraction
Progress Calculation
Conversation Analysis and Feedback

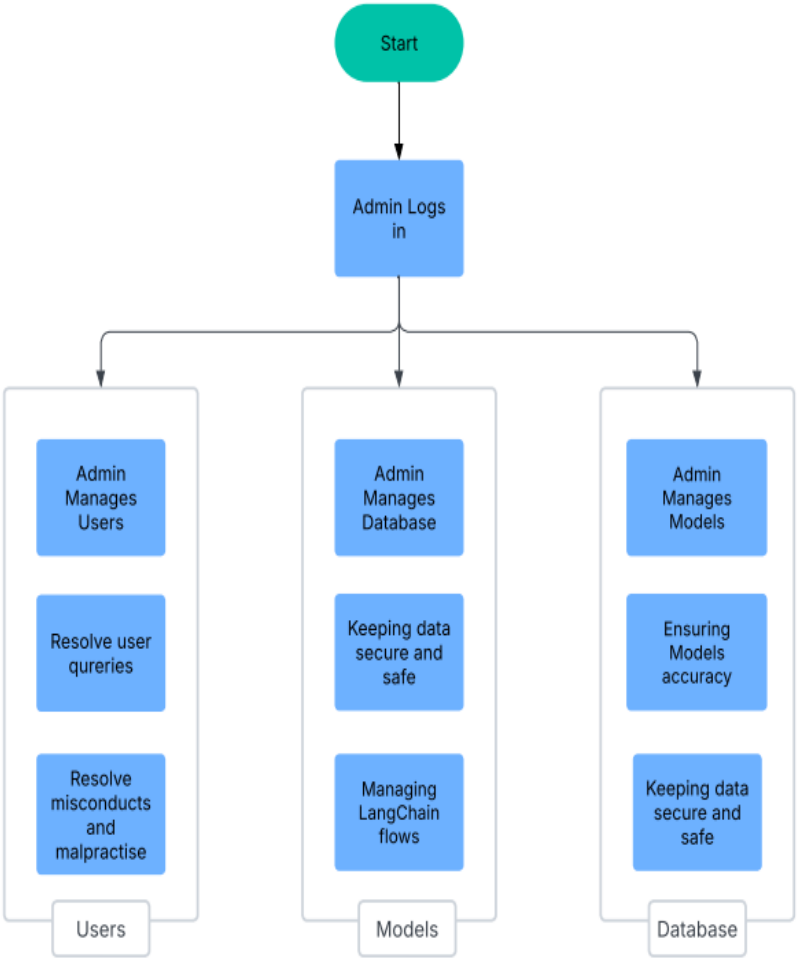
Start
Admin Logs in
Admin Manages Users
Resolve user qureries
Resolve misconducts and malpractise
Users
Admin Manages Database
Keeping data secure and safe
Managing LangChain flows
Models
Admin Manages Models
Ensuring Models accuracy
Keeping data secure and safe
Database

5 Individual Tasks

Team Member	Activity	Tentative Date
Attique Rehman Muhammad Ahmad	Data Collection, Preprocessing	June 15 – July 15, 2025
Muhammad Ahmad	Basic App UI development	July 1 – August 15, 2025
Attique Rehman Muhammad Ahmad	Database Management, Security setup	August 1 – August 31, 2025
Attique Rehman	Backend Development	September 1 – November 30, 2025
Attique Rehman Muhammad Ahmad	Training Audio-to-Text Model	September 1 – October 15, 2025
Attique Rehman Muhammad Ahmad	Training Conversation Tone Identification Model	October 1 – November 15, 2025
Attique Rehman Muhammad Ahmad	Training Text Improvement Model	November 1 – December 15, 2025
Attique Rehman Muhammad Ahmad	Training Key Point Extraction Model	December 1, 2025 – January 15, 2026
Attique Rehman Muhammad Ahmad	Training Text Summarization Model	January 1 – February 15, 2026
Attique Rehman Muhammad Ahmad	Training Text-to-Speech Model	February 1 – March 15, 2026
Attique Rehman	Training Voice Diarization Module	March 1 – April 15, 2026

Muhammad Ahmad	Dashboard & Gamification App Elements	March 15 – April 30, 2026
Muhammad Ahmad	User login and Authentication, user management	March 15 – April 15, 2026
Attique Rehman Muhammad Ahmad	Testing and Validation	April 1 – April 30, 2026
Attique Rehman	Documenting user Manual	April 15 – May 5, 2026
Attique Rehman Muhammad Ahmad	Integration and Deployment	May 1 – May 15, 2026

6 Gantt Chart

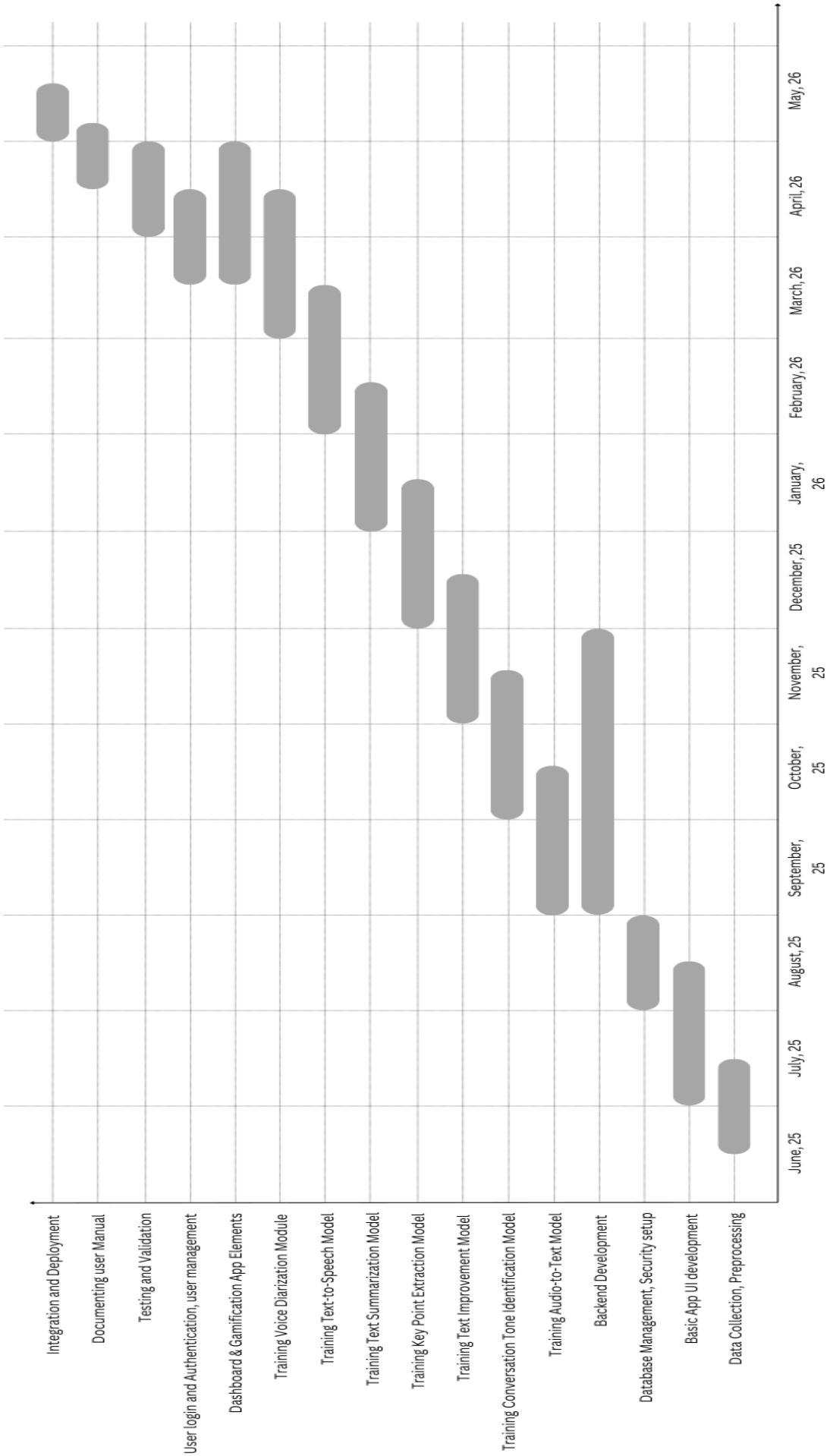

7 Tools and Technologies

The tools and technology listed below may change based on the challenges faced in development of the project, and if any new, better, and improved technologies are introduced meanwhile, those technologies would be preferred as per ease of access.

- Python and JavaScript will be the main programming languages that will be extensively used in building different modules of this project.
- These modules will be integrated with each other using LangChain.
- The front end will be built using React Native and styled using NativeWind.
- A backend will be created on top of PostgreSQL to store all the user data. The files will be stored in audio format.
- Ffmpeg will be used for audio files manipulation.
- NumPy and Pandas will be used for initial data collection and cleaning.
- Scikit-learn will be used to create machine learning models (if needed)
- PyTorch & TensorFlow will be used for training deep learning models and fine-tuning already existing models for our use case.
- Matplotlib will be used for showing findings on different modules and how well they perform.

8 References (Mandatory)

[1] G. Belgüsen, "Now you can turn your Raspberry Pi into speech-to-text and text-to-speech machine without...," *Medium*, 2023. https://medium.com/@gokcerbelgusen/now-you-can-turn-your-raspberry-pi-into-speech-to-text-and-text-to-speech-machine-without-1318096511be.

[2] IBM, "Natural Language Processing," *IBM Think*, 2023. https://www.ibm.com/think/topics/natural-language-processing.

[3] IBM, "Named Entity Recognition," *IBM Think*, 2023. https://www.ibm.com/think/topics/named-entity-recognition.

[4] Width.ai, "BART Text Summarization," *Width.ai*, 2023. https://www.width.ai/post/bart-text-summarization.

[5] Wikipedia, "LanguageTool," *Wikipedia*, 2023. https://en.wikipedia.org/wiki/LanguageTool.

[6] Wikipedia, "Grammarly," *Wikipedia*, 2023. https://en.wikipedia.org/wiki/Grammarly.

[7] LangChain, "LangChain," *LangChain*, 2023. https://www.langchain.com/.

[8] H. Mao, S. Peng, and B. Qin, "Talk2Query: Multimodal query understanding for speech-aware text retrieval," *arXiv preprint arXiv:2309.10674*, 2023. https://arxiv.org/abs/2309.10674.

[9] M. Chen, H. Yang, and K. Wang, "Enhancing text summarization with contrastive learning," *arXiv preprint arXiv:2305.12927*, 2023. https://arxiv.org/abs/2305.12927.

[10] M. Ravanelli, J. Zhong, and Y. Bengio, "Self-supervised speech representation learning," *arXiv preprint arXiv:2101.09624*, 2021. https://arxiv.org/abs/2101.09624.

[11] pyannote, "pyannote-audio: Neural building blocks for speaker diarization," *GitHub*, 2023. https://github.com/pyannote/pyannote-audio.